A. MAEHLER.

DRYING OVEN DOOR AND DOORWAY.

APPLICATION FILED SEPT. 28, 1921.

1,418,594.

Patented June 6, 1922.

2 SHEETS—SHEET 1.

Fig. 1.

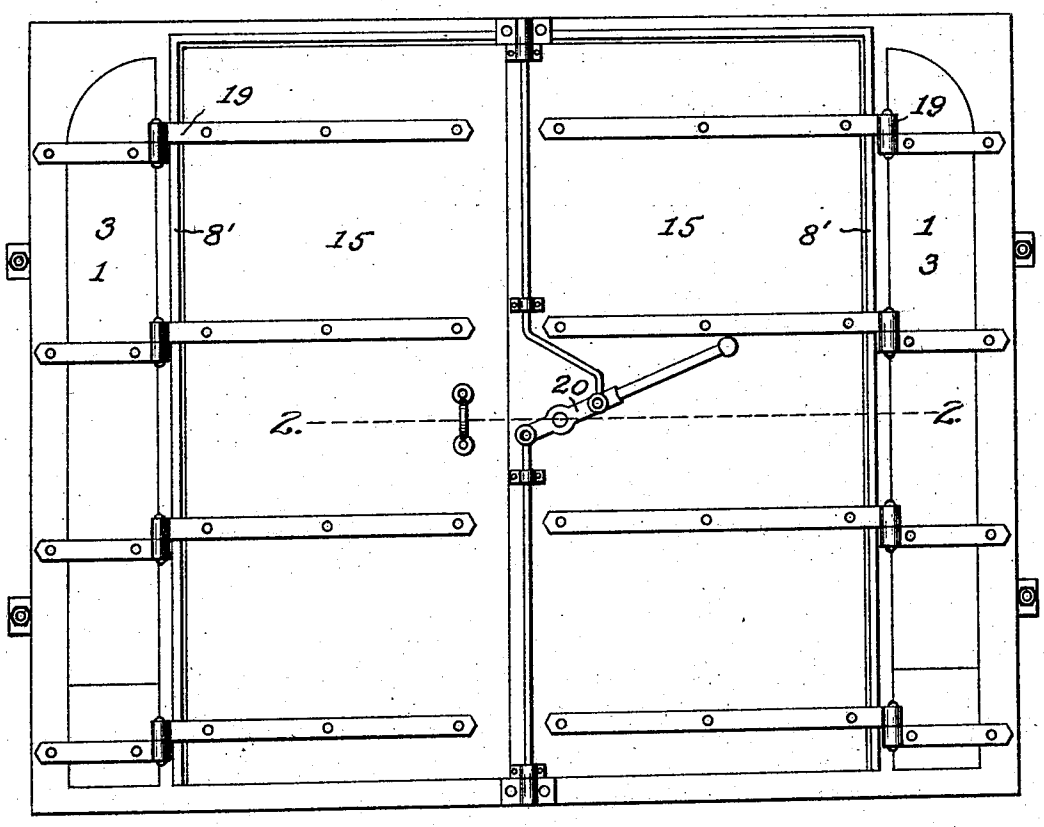

Witness
J. L. Brown

Inventor
ARTHUR MAEHLER,
By Robert Burns, Atty.

A. MAEHLER.

DRYING OVEN DOOR AND DOORWAY.

APPLICATION FILED SEPT. 28, 1921.

1,418,594.

Patented June 6, 1922.

2 SHEETS—SHEET 2.

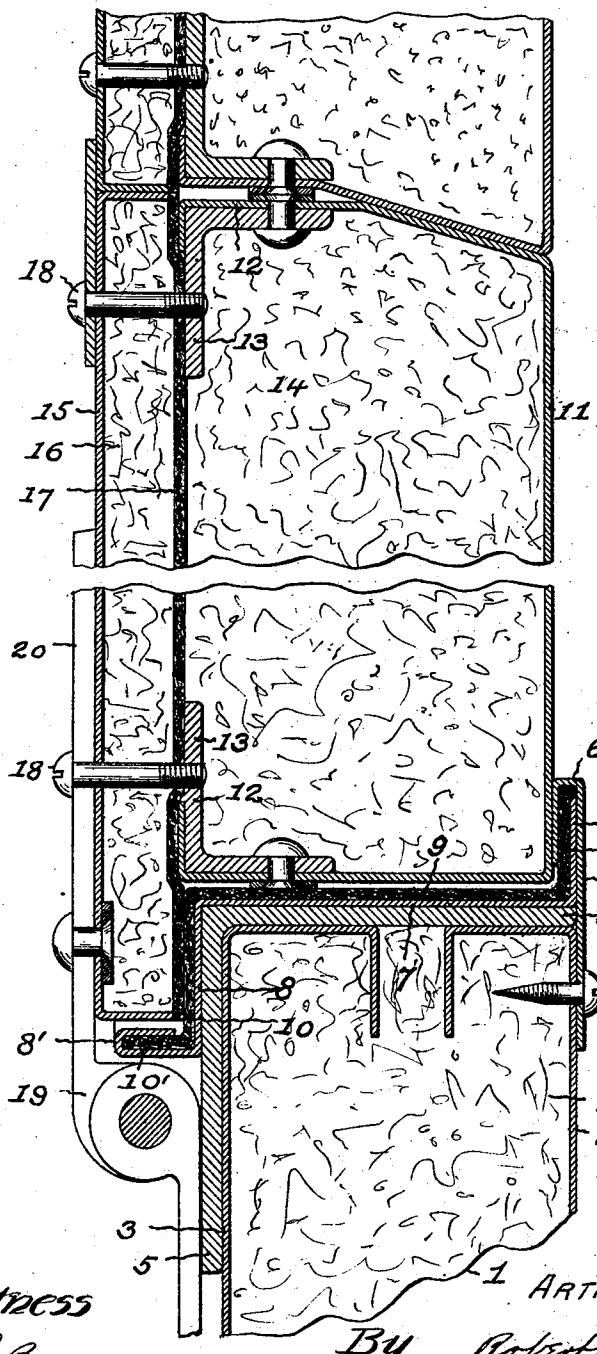

Fig. 2.

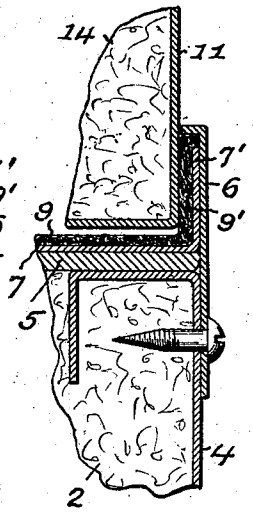

Fig. 3.

Witness

J. L. Brown.

Inventor

ARTHUR MAEHLER.

By Robert Burns Atty.

UNITED STATES PATENT OFFICE.

ARTHUR MAEHLER, OF CHICAGO, ILLINOIS.

DRYING-OVEN DOOR AND DOORWAY.

1,418,594. Specification of Letters Patent. **Patented June 6, 1922.**

Application filed September 28, 1921. Serial No. 503,914.

To all whom it may concern:

Be it known that I, ARTHUR MAEHLER, a citizen of the United States of America, and a resident of Chicago, in the county of Cook and State of Illinois, have invented certain new and useful Improvements in Drying-Oven Doors and Doorways, of which the following is a specification.

This invention relates to the class of enamelling and like ovens in which the enclosing walls and doors are formed by metal clad slabs of heat insulating material, and more particularly to that type of such structures forming the subject matter of my prior Letters Patent No. 1,320,882 dated November 4, 1919, and No. 1,339,601 dated May 11th 1920, and the present improvement has for its various objects:—

To provide a structural formation and association of parts in which the outer casing sheets of metal and the inner filling of heat insulating material are attached together in a substantial manner, with a minimum degree of metallic conducting connection between the outer and inner metallic casing sheets of the structure.

To provide a simple and efficient structural formation of the door and doorway of an oven of the present class in which a close sealing contact of the parts, to prevent air leakage, and an effective insulation at such contact points is attained, all as will hereinafter more fully appear.

In the accompanying drawings:—

Fig. 1, is a front elevation of an enameling oven embodying the present invention.

Fig. 2, is an enlarged detail section on line 2—2, Fig. 1.

Fig. 3, is a similar view of a modification on the same line as Fig. 2.

Like reference numerals indicate like parts in the different views.

Referring to the drawings, 1 designates the front wall of the oven formed as in my former Patent No. 1,320,882, aforesaid, by an inner slab or filler 2 of heat insulating material, and outer and inner enclosing plates 3 and 4 of metal secured to said slab or filler 2 by end folds on said plates engaging in end grooves of said slab or filler and in separated relation, as shown in Fig. 2, so that direct heat conducting contact between the plates is avoided. In the present improvement the doorway or entry to the oven has a doorway frame of the following detail construction.

5 designates an angle iron frame preferably of a rectangular L form fitted to the oven doorway to constitute the respective lintel and jambs of the same.

6 designates a plate of metal, preferably of a rectangular U form secured to the inner face of the front wall of the oven and projecting into the doorway a distance past the angle iron frame 5. In the preferred construction shown in Fig. 2, the projecting portions of the plate 6 are formed with open return bends or folds 6′ for the reception of parts hereinafter described.

7 designates a plate of metal or a like rectangular L form to that of the angle iron frame 5 above described, fitted to the side face of said frame 5 and having at its inner end a right angle flange 7′ fitted against the plate 6 aforesaid, and extending into the return bend 6′ thereof. At its outer end the plate 7 is formed with right angle flanges 8 fitted against the outer face of the angle iron frame 5 and with open return bends 8′ at the ends of the flanges 8 and at right angles thereto.

9 designates a plate of asbestus board or like heat insulating material fitted to the face of the plate 7 and having at its inner end right angle flanges 9′ fitted against the flanges 7′ aforesaid, and extending therewith into the open return bends 6′ of the inner metal plate 6, with said bends 6′ serv- to hold the ends of the insulating plate 8 in place and protect the same from injury by materials passing into and out of the oven. At its outer end the plate 9 is formed with right angle flanges 10 fitted against the flanges 8 of the plate 7 aforesaid, with its outer surface exposed for sealing contact with the hereinafter described margin or border portion of the door of the oven, and said flanges 10 are in turn formed with right angle flanges 10′ which extend into and are held by the open return bends 8′ of the flange 8 of the plate 7 aforesaid.

In the modified construction shown in Fig. 3 the bends of the inner plate 6 are of a right angle form and are adapted to leave the adjacent portions of the insulating plate 9 exposed for sealing contact with the inner face of the door of the oven.

The oven door construction of the present improvement comprises a detail construction of parts as follows:—

11 designates an inner plate metal shell of a flat form, open at its forward side and

provided with inturned marginal flanges 12 for substantial attachment to a reinforcing frame as follows:—

13 designates a reinforcing frame, preferably formed of angle iron, and secured inside the shell 11 and secured to the end walls and inturned flanges 12 thereof.

14 designates a filling of heat insulating material fitting the entire cavity of the inner shell 11 with its outer surface on a plane with that of the reinforcing frame 13 as shown.

15 designates an outer plate metal shell, open at its rear side, and having greater height and width than the inner shell 11, so as to marginally over lap the same when the parts are assembled.

16 designates a filling of heat insulating material fitting the cavity of the shell 15, with its inner surface on a plane with that of the inner side of said shell as shown.

17 designates a sheet of asbestus or like heat insulating material of a size corresponding with that of the inner face of the shell 15 and fitted thereto, with its inner face in contact with the outer face of the filling 14 of said inner shell 11 and its inturned flanges 12 and reinforcing frame 13, and with its marginal portions exposed for sealing contact with the exposed face of the flange 10 of the sheet 9 of insulating material heretofore described.

18 designate attaching screws passing through the outer shell 15 and filling 16 of insulating material and screwing into the angle iron frame 13 of the inner shell 11, to secure the two shells together into a single door structure.

19 designate the usual hinges by which the door is attached to the oven, and 20 designates the usual latch mechanism for securing the door in a closed position.

Having thus described my invention, what I claim as new and desire to secure by Letters Patent, is:—

1. In a drying or like oven, the combination of a frame secured in the entry passage of the oven and comprising an inner metal plate fixed in said passage and having an angularly arranged flange, an outer sheet of heat insulating material forming a facing for said plate and flange, and a hinged door adapted when closed to have sealing contact with said outer sheet.

2. In a drying or like oven, the combination of a frame secured in the entry passage of the oven and comprising an inner metal plate fixed in said passage and having an angularly arranged flange on its outer side formed with an open return bend, an outer sheet of heat insulating material forming a facing for said plate and flange and having engagement with said return bend, and a hinged door having an outer marginal flange adapted in a closed position of the door to have sealing contact with said outer sheet.

3. In a drying or like oven, the combination of a frame secured in the entry passage of the oven and comprising an inner metal plate fixed in said passage and having an angularly arranged flange on its outer side formed with an open return bend, an outer sheet of heat insulating material forming a facing for said plate and flange and having engagement with said return bend, and a hinged door having an outer marginal flange carrying a facing of heat insulating material adapted in a closed position of the door to have sealing contact with the aforesaid outer sheet.

4. In a drying or like oven, the combination of a frame secured in the entry passage of the oven and comprising an inner metal plate fixed in said passage and having angularly arranged inside and outside flanges, said flanges extending in opposite directions, an outer sheet of heat insulating material forming a facing for said plate and flanges, and a hinged door adapted when closed to have sealing contact with said outer sheet.

5. In a drying or like oven, the combination of a frame secured in the entry passage of the oven and comprising an inner metal plate fixed in said passage and having angularly arranged inside and outside flanges, said flanges extending in opposite directions and each flange having an associated open return bend, an outer sheet of heat insulating material forming a facing for said plate and its flanges and having engagement with the return bends aforesaid and a hinged door having an outer marginal flange adapted in a closed position of the door to have sealing contact with said outer sheet.

6. In a drying or like oven, the combination of a frame secured in the entry passage of the oven and comprising an inner metal plate fixed in said passage and having angularly arranged inside and outside flanges having an associated open return bend, an outer sheet of heat insulating material forming a facing for said plate and its flanges and having engagement with the return bends aforesaid, and a hinged door having an outer marginal flange carrying a facing of heat insulating material adapted in a closed condition of the door to have sealing contact with the aforesaid outer sheet.

7. A door or like portion of a drying oven comprising, an inner shell open at its front face, a filling of heat insulating material in said shell, an outer shell open at its rear face, a filling of heat insulating material in said shell, a sheet of heat insulating material interposed between said shells, and means for securing the parts together in assembled relation.

8. A door or like portion of a drying oven comprising, an inner shell open at its front face and having inturned flanges at said front face, a filling of heat insulating material in said shell, an outer shell open at its rear face, a filling of heat insulating material in said shell, a sheet of heat insulating material interposed between said shells, and means for securing the parts together in assembled relation.

9. A door or like portion of a drying oven comprising, an inner shell open at its front face and having inturned flanges and reinforcing frame of angle iron at said front face, a filling of heat insulating material in said shell, an inner shell open at its front face, a filling of heat insulating material in said shell, a sheet of heat insulating material interposed between said shells, and a series of attaching screws passing through the outer shell and screwed into the aforesaid reinforcing frame.

10. A door or like portion of a drying oven comprising, an inner shell open at its front face, a filling of heat insulating material in sail shell, an outer shell open at its rear face, a filling of heat insulating material in said shell, a sheet of heat insulating material interposed between said shells, the outer shell and interposed sheet having marginal extensions beyond the inner shell, and means for securing the parts together in assembled relation.

11. A door or like portion of a drying oven comprising, an inner shell open at its front face and having inturned flanges at said front face, a filling of heat insulating material in said shell, an outer shell open at its rear face, a filling of heat insulating material in said shell, a sheet of heat insulating material interposed between said shells, the outer shell and interposed sheet having marginal extensions beyond the inner shell, and means for securing the parts together in assembled relation.

12. A door or like portion of a drying oven comprising, an inner shell open at its front face and having inturned flanges and reinforcing frame of angle iron at said front face, a filling of heat insulating material in said shell, an inner shell open at its front face, a filling of heat insulating material in said shell, a sheet of heat insulating material interposed between said shells, the outer shell and interposed sheet having marginal extensions beyond the inner shell, and a series of attaching screws passing through the outer shell and screwed into the aforesaid reinforcing frame.

Signed at Chicago, Illinois, this 26th day of September, 1921.

ARTHUR MAEHLER.