April 13, 1954 D. A. PALMITER 2,674,817

BULLDOZER BLADE HAVING DETACHABLE WINGS

Filed March 2, 1950 2 Sheets-Sheet 1

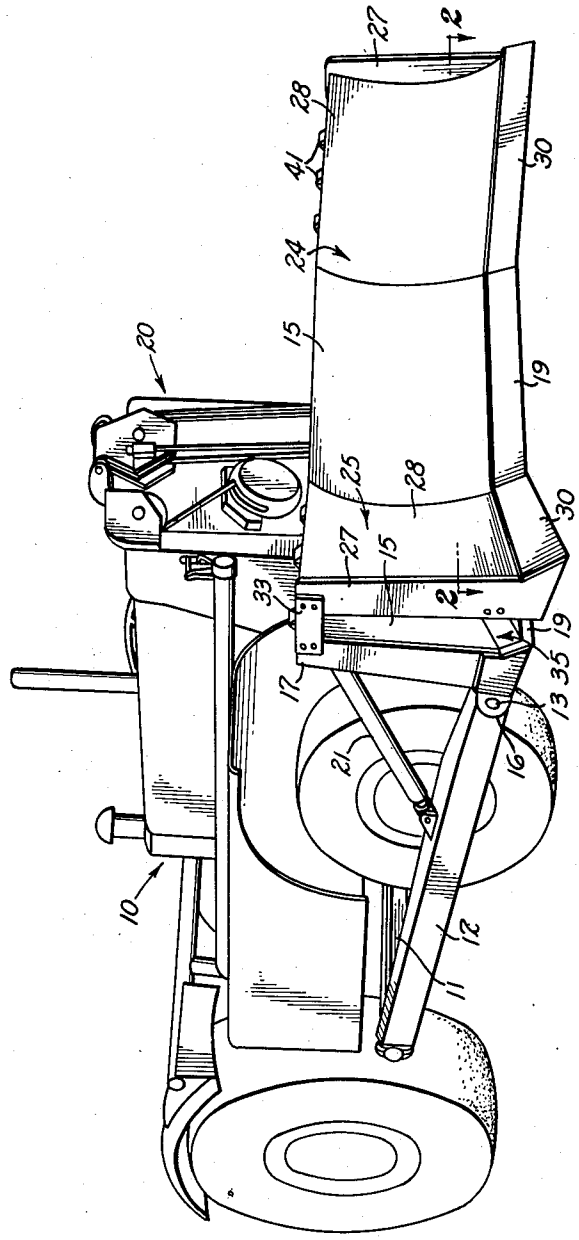

Fig. 1

INVENTOR:
DANIEL A. PALMITER
BY HIS ATTORNEYS
HARRIS, KIECH, FOSTER & HARRIS
BY Fred C. Harris

April 13, 1954 D. A. PALMITER 2,674,817

BULLDOZER BLADE HAVING DETACHABLE WINGS

Filed March 2, 1950 2 Sheets-Sheet 2

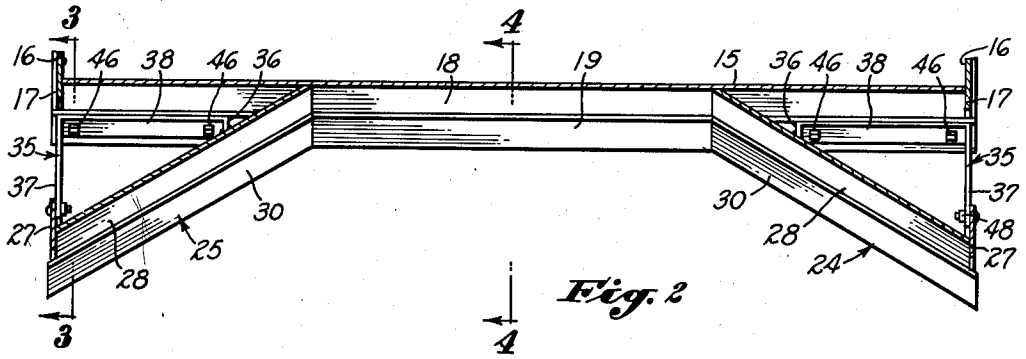

Fig. 2

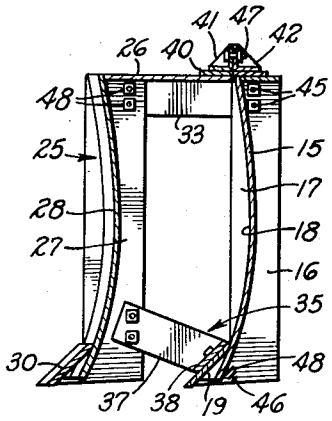

Fig. 3

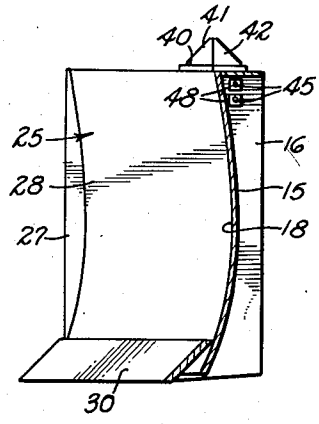

Fig. 4

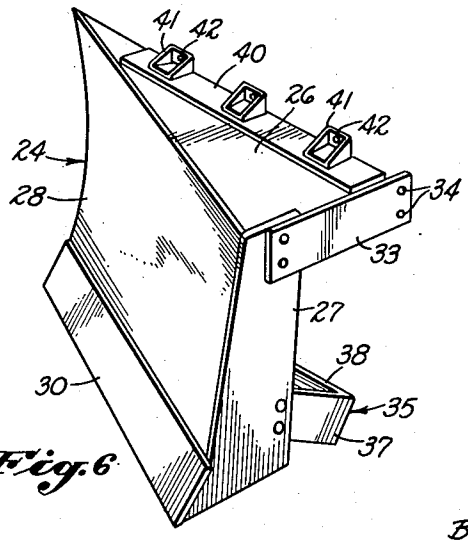

Fig. 6

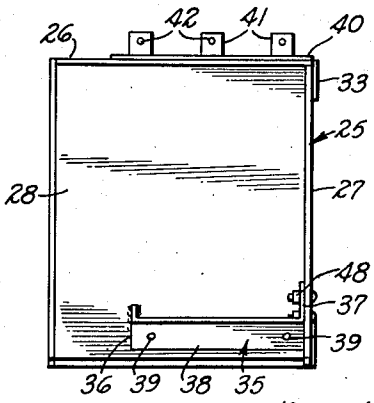

Fig. 5

INVENTOR:
DANIEL A. PALMITER
BY HIS ATTORNEYS
HARRIS, KIECH, FOSTER & HARRIS
By

Patented Apr. 13, 1954

2,674,817

UNITED STATES PATENT OFFICE

2,674,817

BULLDOZER BLADE HAVING DETACHABLE WINGS

Daniel A. Palmiter, Alhambra, Calif., assignor to Shepherd Tractor & Equipment Co., Los Angeles, Calif., a limited partnership

Application March 2, 1950, Serial No. 147,180

2 Claims. (Cl. 37—144)

1

This invention relates generally to machines or apparatus for handling earth and other loose materials in scraping and leveling the ground, transferring materials from one area to another, etc. More particularly, the invention pertains to a bulldozer adapted to push loose materials, and specifically to the bulldozer blade structure thereof.

Conventional bulldozers usually include a tractor or like vehicle adapted to be propelled along the ground and having a bulldozer blade extending transversely across the front of the vehicle and adapted to scrape earth from the surface of the ground and to push the same forwardly so as to level the ground to a specified grade and to transfer earth from one area to another. Such conventional blades are usually straight throughout their length and are made concave-convex in cross section to produce an efficient combined scraping and forward pushing action. As is customary in present bulldozers, the blade is carried between the forward ends of side beams which are pivoted to the vehicle to adapt them to be raised and lowered as required, the blade being pivotally connected to the forward ends of the beams so that its angle of inclination with respect to the ground can be varied.

The pusher blades of conventional bulldozers usually extend laterally beyond the sides of the vehicle and since they are straight throughout their length, they have the disadvantage of allowing the earth to move laterally beyond their ends. Consequently, it is necessary to move the bulldozer over the same area several times in order to scrape and push all the earth of this area. This inadequacy of conventional bulldozers is well recognized and various attempts have been made to overcome the difficulty. For example, it has been proposed to construct the bulldozer blade in two or more parts which are pivotally connected so that the lateral end portions or sections of the blade can be inclined with respect to each other or to a central, straight section of the blade. By this means, earth which is engaged by the end sections is caused to move inwardly toward the center of the blade to minimize the tendency of the earth to spill over the lateral ends thereof.

It has already been explained that the bulldozer blade as a whole is pivoted at the forward ends of longitudinal beams, which in turn, are pivotally connected to the tractor or other vehicle. It will be apparent, therefore, that when the individual components of a multipart blade

2

are mounted for relative pivotal movement, a very complicated blade structure necessarily results. Not only is the blade complex in construction but the controls for varying the shape of the blade are also complicated so that the overall cost of the bulldozer blade is materially increased and considerable servicing is necessary. Moreover, when the blade components are mounted for relative pivotal adjustment lack of rigidity results so that when the blade encounters large stones or other objects offering considerable resistance to the forward motion of the tractor, the components or their mounting means frequently break so that the bulldozer is rendered inoperative until the components are repaired or replaced.

It is therefore an object of my invention to provide in a bulldozer or like machine for handling earth and other loose material, a bulldozer blade having inclined end portions which function to direct the material inwardly toward the straight central portion of the blade.

Another object is to provide a bulldozer blade in which the inclined end portions are made as separate sections or wings rigidly secured to the main portion of the blade, these sections having forward faces which converge inwardly and rearwardly so as to guide the material toward the central portion of the blade.

Another object is to provide a bulldozer blade structure in which the end sections or wings are detachably connected to the main blade in a manner such that they can be quickly disconnected from the main blade when their use is unnecessary in performing certain work.

Another object is to provide a bulldozer blade structure in which the end sections or wings have integral mounting brackets which may be conveniently bolted to the main blade. By this provision, a blade wing sections can be readily applied to existing blades without altering the structure thereof.

A further object is to provide a bulldozer structure, of the character referred to, which is especially strong and durable and one which is highly efficient in performing its intended function.

Further objects will appear from the following specification, and from the drawings, which are intended for the purpose of illustration only, and in which:

Fig. 1 is a perspective view of a tractor, showing my improved bulldozer blade structure applied to use thereon;

Fig. 2 is an enlarged sectional plan view, taken on line 2—2 of Fig. 1;

Fig. 3 is a cross-sectional view, taken on line 3—3 of Fig. 2;

Fig. 4 is a cross-sectional view, taken on line 4—4 of Fig. 2;

Fig. 5 is a rear view of one of the blade wing elements or sections; and

Fig. 6 is a perspective view of one of the detachable wing sections.

Referring to Fig. 1, the vehicle 10 shown therein by way of example, is a conventional tractor such as commonly employed in connection with road building and surface leveling operations. The tractor 10 has a transverse strut 11, to the outer ends of which are pivoted forwardly extending beams 12. The beams 12 have horizontal pivot pins 13 at their forward ends to which a bulldozer blade 15 is pivoted, the blade having rearwardly projecting, perforated ears 16 for receiving the pins. The bulldozer blade 15 has vertical flanges 17 at its ends and, as shown in Figs. 3 and 4, is concavo-convex in cross section, the forward face 18 thereof being concave. Carried by the blade 15 and extending along the lower edge portion thereof is an inclined scraper shoe 19.

The bulldozer blade assembly described above is adapted to be raised and lowered with the beams 12 pivoting on the cross-strut 11, by means of a cable system indicated generally at 20 in Fig. 1. In addition, the blade 15 is adapted to be pivoted on the pins 13 to desired angles of inclination by means of hydraulic jacks 21 which are pivotally connected between the beams 12 and upper portions of the blade. Operation of the cable means 20 and the hydraulic jacks 21 is controlled by the operator of the tractor by any suitable means, not herein shown.

As is usual with bulldozers of the type described thus far, the blade 15 is lowered into engagement with the ground and is adjusted to the desired angle of inclination prior to travel of the tractor. As the tractor is propelled forwardly by its engine, the lower edge 19 of the blade 15 functions with a scraping action to cut into and turn up the earth and to push the loosened earth forwardly to level the ground. As the earth is turned up, it tends to roll upwardly and forwardly and this is due to the curvature of the bulldozer blade. As previously indicated, when a straight blade is employed, the earth which piles up in front of the blade also tends to move laterally so that it spills over the ends of the blade. Consequently, it is necessary to repeat the bulldozing operation several times in order to completely reduce the level of the ground. In order to avoid this condition, my invention contemplates the use of a bulldozer blade which has angular end portions which function to direct the scraped earth toward the central portion of the blade. By this means, spilling of the earth laterally over the ends of the blade is minimized and a more efficient earth cutting and pushing action is produced. The end portions, which are hereinafter referred to as blade wing sections, are constructed as next described.

The blade wing sections 24 and 25 are similar in construction, except that they are of opposite hand. Consequently, it is deemed sufficient to describe one section, for example the section 24. The wing section 24 includes a horizontal triangular top member 26 and a substantially rectangular, vertical end member 27 having its upper end secured to the base edge of the triangular top member. Each wing section 24 and 25 also in-

cludes a substantially rectangular front plate 28 having its upper longitudinal edge connected to the front edge portion of the triangular top member 26 and one of its vertical edges secured to the forward vertical edge portion of the end member 27. As shown best in Figs. 3 and 6, the front plate 28 preferably has a concavo-convex cross section, the curvature being the same as that of the main blade 15. The wing section 24 has an inclined strip 30 welded or otherwise secured to its lower edge portion, this strip providing a scraper shoe. The several components 26, 27 and 28 are preferably welded together so as to provide a strong and durable unitary structure.

Secured to the upper end of the end member 27 and to the outer edge of the top member 26 is a strip 33 which provides a mounting bracket, the strip having holes 34 in its projecting end (Fig. 6) which are adapted to align with similar holes in the side flanges 17 of the bulldozer blade 15. A U-shaped mounting bracket 35 has a relatively short leg 36 which is welded to the rearward side of the plate 28 and a longer leg 37 which is fastened to the end member 27. The connecting crossbar 38 of the bracket 35 is provided with bolt holes 39 (Fig. 5) which are adapted to align with similar bolt holes in the scraper shoe 19 of the blade 15. Welded to the upper surface of the top member 26 adjacent the rearward edge thereof is a metal strip 40 which carries a plurality of mounting brackets 41 each having a bolt hole 42. The flat rearward sides of the brackets 41 are adapted to abut the forward flat sides of similar mounting brackets 42 carried by the blade 15 at its upper edge portion (Fig. 3).

To apply each blade wing section 24 and 25 to the bulldozer blade 15, the bolt holes of the brackets 33, 35 and 41 are aligned with the corresponding bolt holes of the blade 15 and its brackets 42. Bolts 45, 46 and 47 are then inserted in the respective aligned holes after which nuts 48 are screwed onto the threaded ends of the bolts to securely connect each wing section to the main blade 15. By this means, the wing sections 24 and 25 are detachably connected to the blade 15 so that by simply removing the several bolts the sections can be quickly detached.

Due to the triangular shape of the top member 26 and the relative lengths of the mounting brackets 33 and 35, the curved front plates 28 of the wing sections 24 and 25 are inclined with respect to the blade 15. Since the sections 24 and 25 are of opposite hand, their plates 28 converge rearwardly and inwardly as shown in Figs. 1 and 2. Thus, the wing sections 24 and 25 cooperate with the central portion of the main blade 15 in providing a channel-shaped scoop. It will be observed by reference to Figs. 1, 2 and 4 that the end members 27 project forwardly from the outer edges of the plates 28 and thus provide outer sides of the scoop.

In applying the combination bulldozer blade 15, 24, 25 to use, the vehicle 10 is propelled along the ground and as it approaches earth which is to be displaced from one area to another for the purpose of leveling a roadway or the like, the combination blade is lowered by means of the cable mechanism 20 and may be tilted by actuating the hydraulic jacks 21. As the vehicle continues its forward motion, the shoe portions 19 and 30 of the combination blade act to scrape the earth and to dig into mounds of the earth which is thus caused to build up against the curved forward faces of the combination blade. Due to the in-

clination of the blades 28 of the wing sections 24 and 25, the earth is directed inwardly toward the central portion of the blade 15. In other words, the combination blade 15, 24, 25 acts to scoop the earth and to retain the same within the confines of the scoop-like blade structure.

Thus, the possibility of earth flowing or spilling laterally over the ends of the blade structure is avoided and a more efficient bulldozing operation is attained. Stated another way, since movement of the earth laterally beyond the ends of the bulldozer blade structure is prevented, it is unnecessary to repeat the bulldozing operation over the same area in order to retrieve earth which might have escaped from the blade. Thus, the present combination bulldozer blade is an important improvement over conventional straight blades.

Moreover, the present rigid blade structure is an improvement over nonrigid combination blades in which the various sections are hinged together for relative pivotal adjustment, since the instant structure is stronger, more stable and more durable in use. Furthermore, in the present improved bulldozer blade structure the inclined wing sections are readily attachable to and removable from the main blade so that the blade can be conveniently converted from one of a straight form to one of a scoop-like character, and vice versa. As previously pointed out, the inclined wing sections are adapted for attachment to existing straight bulldozer blades without materially altering the same and this is also a highly desirable feature of the invention.

While I have herein shown and described the bulldozer blade structure as embodied in a preferred form of construction, by way of example, it will be apparent that various modifications might be made therein without departing from the spirit of the invention. Consequently, I do not wish to be limited in this respect, but desire to be afforded the full scope of the appended claims.

I claim as my invention:

1. A bulldozer blade structure comprising in combination: a straight blade having a concave substantially vertical longitudinally extending forward face, a pair of blade wing sections detachably connected to the forward face of said blade and abutting said blade at spaced points inward of the ends thereof, said sections having concave forward faces inclined with respect to said forward face of said blade, said face of said sections converging toward the center of said blade, a pair of U-shaped brackets, one of said brackets being carried by each of said sections at a rearward lower edge thereof, each of said brackets having a crossbar, said crossbars being bolted to the lower edge of the face of said blade, a plurality of mounting brackets carried by each of said sections at the upper edge thereof and longitudinally spaced therealong, and bolts securing said brackets to the upper edge of said blade.

2. A bulldozer blade structure comprising in combination: a straight blade having a concave substantially vertical longitudinally extending forward face, a pair of blade wing sections detachably connected to the forward face of said blade and abutting said blade at spaced points inward of the ends thereof, said faces of said sections converging toward the center of said blade, a pair of U-shaped brackets having legs of unequal length fastened to rear lower portions of said sections, each of said brackets having an apertured crossbar, bolts mounted in said apertures fastening said crossbars to lower portions of the forward face of said straight blade, a pair of substantially horizontal triangular top members, one each of said top members secured to the top of each of said sections, substantially vertical end members secured to said top members and said sections, and longitudinally spaced mounting brackets carried by said top members and bolted to the upper edge of said straight blade.

References Cited in the file of this patent

UNITED STATES PATENTS

Number	Name	Date
523,134	Sullivan	July 17, 1894
1,466,464	Beatty	Aug. 28, 1923
1,668,850	Larsh	May 8, 1928
1,753,150	Hinds et al.	Apr. 1, 1930
1,977,817	Bird	Oct. 23, 1934
2,230,704	Sorensen	Feb. 4, 1941
2,485,407	Peterson	Oct. 18, 1949