Nov. 13, 1945. J. L. WENTZ 2,388,777

EXERCISING APPARATUS

Filed Aug. 17, 1943

Fig. 1.

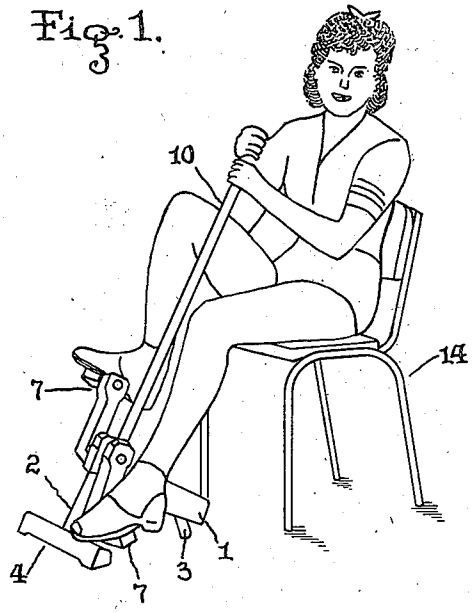

Fig. 2.

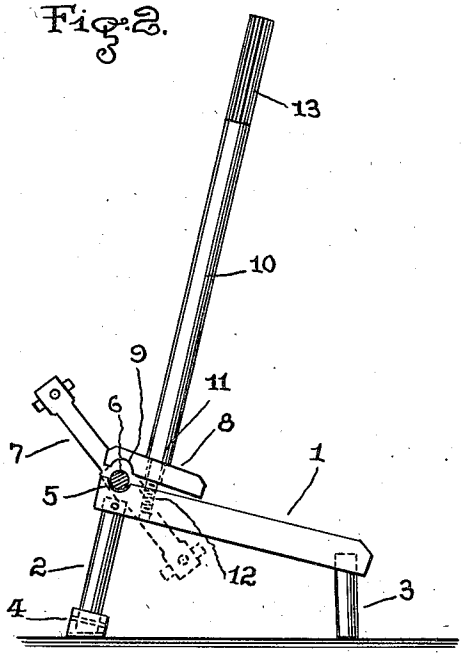

Fig. 3.

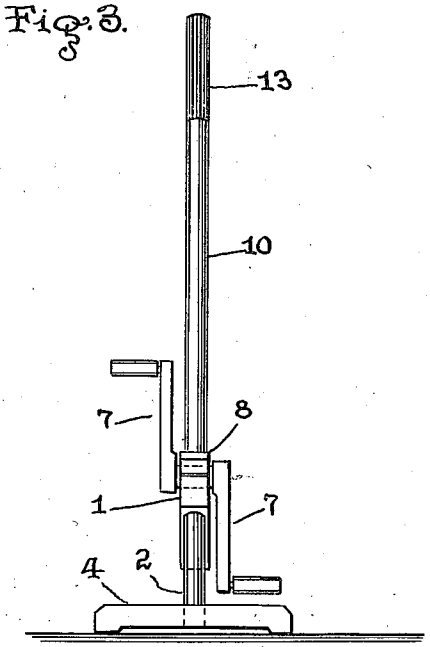

INVENTOR.

Jere L. Wentz

BY

Attorney

Patented Nov. 13, 1945

2,388,777

UNITED STATES PATENT OFFICE

2,388,777

EXERCISING APPARATUS

Jere L. Wentz, Passaic, N. J.

Application August 17, 1943, Serial No. 498,936

2 Claims. (Cl. 272—73)

The invention relates to improvements in exercising apparatus.

An object of the invention is to provide new and useful means for use in exercising the limbs and muscles of the human body.

A further object of the invention is to provide a new and useful pedal means adapted for indoor exercise.

A further object of the invention is to provide, in a device of the character specified, new and useful means whereby the effort required for operation may be adjustably regulated and increased or reduced as may be desired by the user.

A further object of the invention is to provide an apparatus of the character specified which may be easily and conveniently knocked down and assembled.

Other objects and advantages of the invention will be apparent from the following description.

The drawing is intended for illustration and changes in shape, form or arrangement of parts may be made without departing from the spirit of the invention.

A preferred embodiment of the invention is illustrated in the drawing, in which

Fig. 1 is a perspective view of the device as in actual use;

Fig. 2 is a side view of the device and

Fig. 3 is a front view of the same.

Similar characters of reference refer to like parts throughout the several views.

The form of the device illustrated comprises a block 1, preferably mounted on legs 2 and 3 at front and rear, with a cross-bar 4 at the base of the front leg 2 to provide stability. Near the forward end of the block 1 there is a lateral seat 5 for a shaft 6 having pedals 7 at its ends.

Resting upon the upper face of the block 1 is a friction plate 8 having a lateral groove 9 in its under side co-acting with the lateral seat 5 of the block 1 to form a friction clutch for the shaft 6.

A bar 10 having a collar 11 near its lower end is inserted through a bore in the friction plate 8 and threadedly seated at its end 12 in the block 1 whereby the friction block or plate 8 may be urged toward the block 1 to pinch the shaft 6.

The free end of the bar 10 may be provided with a knurled handle section 13.

The device being thus assembled, a person desiring to use the same may be seated in a chair 14 and grasps the handle 13 of the bar 10, places his feet on the pedals 7 and operates the device as an ordinary bicycle. By rotating the bar 10 in its threaded seat 12 in the block 1, the friction plate 8 may be pressed against the shaft 6 and thereby retard its rotation and increase the effort required for the operation of the device thus simulating the operation of a bicycle in ascending a hill or up-grade.

Having thus described the invention, what is claimed is:

1. A device of the character described comprising in combination, a block having a seat formed in its upper face, supporting legs for said block, a cross bar on said legs, a second block resting on said first named block and having a seat formed on its under face, a rotatable shaft between said blocks and seated in said seats and frictionally engaged thereby and a bar inserted through a bore in the said second named block and threadedly seated in the said first named block, a collar on said bar positioned to engage said second block and a handle on said bar positioned to be grasped by the operator of the device whereby the frictional engagement of the said rotatable shaft may be varied while in operation.

2. A device of the character described, comprising in combination, a block having a seat formed in its upper face, a second block loosely mounted on the said first named block and having a seat in its under face, a rotatable shaft between said blocks and rotatably seated in said seats and frictionally engaged thereby, and a bar loosely inserted through said second named block and threadedly seated in the said first named block, a collar on said bar position to engage the said second named block and a handle on said bar positioned to be grasped by the operator of the device whereby the frictional engagement of the said rotatable shaft may be varied while in operation.

JERE L. WENTZ.