(12) INTERNATIONAL APPLICATION PUBLISHED UNDER THE PATENT COOPERATION TREATY (PCT)

(19) World Intellectual Property Organization
International Bureau

(43) International Publication Date
02 January 2025 (02.01.2025)

WIPO | PCT

(10) International Publication Number
WO 2025/006544 A1

(51) International Patent Classification:
F16H 7/08 (2006.01) *F02B 67/06* (2006.01)
F16H 7/02 (2006.01)

(21) International Application Number:
PCT/US2024/035534

(22) International Filing Date:
26 June 2024 (26.06.2024)

(25) Filing Language: English

(26) Publication Language: English

(30) Priority Data:
63/510,288 26 June 2023 (26.06.2023) US

(71) Applicant: **GATES CORPORATION** [US/US]; 1144 15th Street, Suite 1400, Denver, Colorado 80202 (US).

(72) Inventors: **KIM, Sangkyu**; 3303 St. Etienne Blvd., Windsor, Ontario N8W 581 (CA). **KOPPESER, Michael**; 3303 St. Etienne Blvd., Windsor, Ontario N8W 581 (CA). **SOLANKI, Hitesh**; 3303 St. Etienne Blvd., Windsor, Ontario N8W 581 (CA).

(74) Agent: **BRAIRTON, Scott A.**; HOLZER PATEL DRENNAN, 216 16th Street, Suite 1350, Denver, Colorado 80202 (US).

(81) Designated States *(unless otherwise indicated, for every kind of national protection available)*: AE, AG, AL, AM, AO, AT, AU, AZ, BA, BB, BG, BH, BN, BR, BW, BY, BZ, CA, CH, CL, CN, CO, CR, CU, CV, CZ, DE, DJ, DK, DM, DO, DZ, EC, EE, EG, ES, FI, GB, GD, GE, GH, GM, GT, HN, HR, HU, ID, IL, IN, IQ, IR, IS, IT, JM, JO, JP, KE, KG, KH, KN, KP, KR, KW, KZ, LA, LC, LK, LR, LS, LU, LY, MA, MD, MG, MK, MN, MU, MW, MX, MY, MZ, NA, NG, NI, NO, NZ, OM, PA, PE, PG, PH, PL, PT, QA, RO, RS, RU, RW, SA, SC, SD, SE, SG, SK, SL, ST, SV, SY, TH, TJ, TM, TN, TR, TT, TZ, UA, UG, US, UZ, VC, VN, WS, ZA, ZM, ZW.

(84) Designated States *(unless otherwise indicated, for every kind of regional protection available)*: ARIPO (BW, CV, GH, GM, KE, LR, LS, MW, MZ, NA, RW, SC, SD, SL, ST, SZ, TZ, UG, ZM, ZW), Eurasian (AM, AZ, BY, KG, KZ, RU, TJ, TM), European (AL, AT, BE, BG, CH, CY, CZ, DE, DK, EE, ES, FI, FR, GB, GR, HR, HU, IE, IS, IT, LT, LU, LV, MC, ME, MK, MT, NL, NO, PL, PT, RO, RS, SE, SI, SK, SM, TR), OAPI (BF, BJ, CF, CG, CI, CM, GA, GN, GQ, GW, KM, ML, MR, NE, SN, TD, TG).

Published:
— *with international search report (Art. 21(3))*

(54) **Title:** RING TENSIONER WITH REMOVABLE FLANGE

(57) **Abstract:** Flanged ring tensioners having at least one removeable and replaceable side flange. The ring tensioners can be dissembled into two or more distinct parts, pieces, or elements. In one implementation, a ring body piece has a belt-engaging surface and a first side flange and a flange body piece has a second side flange. In another implementation, a ring body piece has a belt

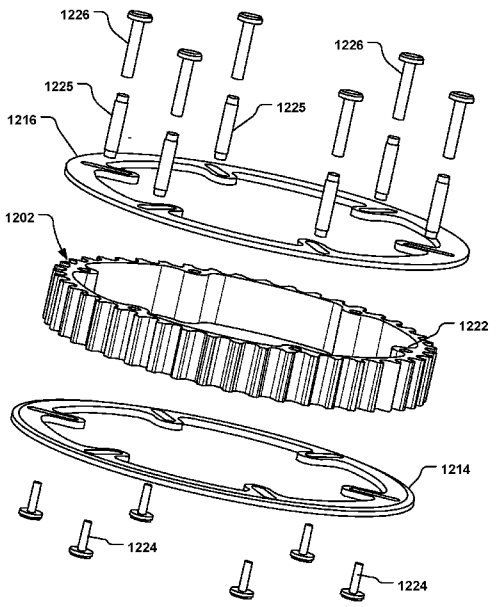

FIG. 14

WO 2025/006544 A1

RING TENSIONER WITH REMOVABLE FLANGE

TECHNICAL FIELD

[0001] The present application relates to belt systems having a belt, one or more sprockets or wheels, and a belt tensioner. More specifically, the present application relates to a ring belt tensioner having a flange.

BACKGROUND

[0002] Belt tensioners are well known devices that are used in many belt-drive systems. Tensioners generally apply a constant belt-tensioning force, which compensates for increases in belt length due to wear, belt expansion (e.g., due to increased temperature) and other factors.

[0003] Some synchronous belt drives have a predetermined distance between pulley centers, which distance cannot be altered. This creates a problem of matching belt length with belt drive length. Belt length is selected to assure that the belt fits snugly with tension in the belt after installation.

[0004] In systems where the distance between sprockets, idlers or pulleys cannot change, there is a need for a device that generates tension in thebelt. Certain systems or applications do not have features to which conventional belt tensioners could be attached. For some of these systems or applications, a floating belt tensioner is used.

[0005] A floating tensioner is positioned, in the belt, between the drive and driven wheel. In order to position the tensioner in the belt, the tensioner may be partially compressed from a circular shape to an oval shape, particularly if the tensioner has edge flanges. For some flexible tensioners, however, the flexible nature that allows the compression reduces the strength of the tensioner.

[0006] Thus, there is a need for a belt tensioner that can be easily and readily used in systems with fixed distances.

SUMMARY

[0007] The present disclosure provides flanged ring tensioners for a belt system, such as for a fixed two-point system, which has a toothed belt running between two gears, pulleys, idlers, or sprockets that are both fixed in place.

[0008] The ring tensioners of this disclosure have at least one removeable and replaceable side flange. In other words, the ring tensioners can be dissembled into two or more distinct parts, pieces, or elements. In some implementations, the ring tensioners of this disclosure have two removeable and replaceable side flanges. In other words, the ring tensioners can be dissembled into three distinct parts, pieces, or elements.

[0009] In one particular implementation, this disclosure provides a ring tensioner for a belt system, the ring tensioner having a first piece that has a belt-engaging surface and a circumferential flange, and a second separate piece that has a second circumferential flange and configured to releasably engage with the first piece.

[0010] In another particular implementation, this disclosure provides a belt ring tensioner that has an annular belt-engaging surface, a first circumferential flange on a first side edge of the belt-engaging surface, and a second circumferential flange on a second side edge of the belt-engaging surface, the second circumferential flange removeable and replaceable in relation to the belt-engaging surface.

[0011] In yet another particular implementation, this disclosure provides a method of installing a ring tensioner in a synchronous belt. The method includes inserting a ring body between a first span and a second span of the synchronous belt, the ring body having a belt-engaging surface, and after inserting the ring body between the spans, engaging at least one side flange with the ring body. In some implementations, the method includes engaging a second flange with the ring body.

[0012] These and other aspects of the tensioner described herein will be apparent after consideration of the Detailed Description and figures herein. It is to be understood, however, that the scope of the claimed subject matter shall be determined by the claims as issued and not by whether given subject matter addresses any or all issues noted in the Background or includes any features or aspects recited in the Summary.

BRIEF DESCRIPTION OF THE FIGURES

[0013] FIG. 1 is side view of a fixed belt system with a floating tensioner.

[0014] FIGS. 2A, 2B, 2C and 2D are schematic side views of belt systems.

[0015] FIG. 3 is a perspective view of an example ring tensioner.

[0016] FIG. 4 is a perspective view of the ring tensioner of FIG. 3 with a removable flange removed therefrom.

[0017] FIG. 5 is a cross-sectional view of the ring tensioner of FIG. 3 taken along line 5-5 of FIG. 3.

[0018] FIG. 6 is a cross-sectional view of the ring tensioner of FIG. 3 taken along line 6-6 of FIG. 3.

[0019] FIG. 7 is a cross-sectional side view of the ring tensioner of FIG. 3 taken along line 7-7 of FIG. 3.

[0020] FIG. 8 is a perspective view of a belt system.

[0021] FIG. 9 is a perspective view of the belt system of FIG. 8 with a ring tensioner body positioned therein.

[0022] FIG. 10 is a cross-sectional view of a portion of the ring tensioner, without the removable flange, with a belt shown.

[0023] FIG. 11 is a perspective view of the belt system with the ring tensioner fully installed therein.

[0024] FIG. 12 is a perspective view of another example ring tensioner.

[0025] FIG. 13 is a side view of the ring tensioner of FIG. 12.

[0026] FIG. 14 is an exploded perspective view of the ring tensioner of FIG. 12.

[0027] FIG. 15 is an enlarged cross-sectional side view of the ring tensioner of FIG. 12.

DETAILED DESCRIPTION

[0028] As indicated above, the present disclosure is directed to belt tensioners for systems having a fixed distance between belt engagement points (e.g., gears, sprockets, pulleys, idlers, etc.), such as found in, e.g., fixed, two-point belt systems. Such fixed systems may be found, for example, in synchronous belt transmissions, as automotive timing belts, and numerous industrial applications including printing machines, conveyor systems, cleaning systems, and in

industries such as breweries, aluminum processing plants, power plants, sandblasting machines, agriculture, and mining. The belt tensioners of this disclosure include at least one side flange that is removable and replaceable on the tensioner. In some implementations, the flange is provided as a second piece, part or element that is fully removeable from the rest of the tensioner.

[0029] In the following description, reference is made to the accompanying drawing that forms a part hereof and in which is shown by way of illustration at least one specific implementation. The following description provides additional specific implementations. It is to be understood that other implementations are contemplated and may be made without departing from the scope or spirit of the present disclosure. The following detailed description, therefore, is not to be taken in a limiting sense. While the present disclosure is not so limited, an appreciation of various aspects of the disclosure will be gained through a discussion of the examples, including the figures, provided below. In some instances, a reference numeral may have an associated sub-label consisting of a lower-case letter to denote one of multiple similar components. When reference is made to a reference numeral without specification of a sub-label, the reference is intended to refer to all such multiple similar components.

[0030] Turning to the figures, FIG. 1 shows a common configuration of a belt system 100 that includes a flexible belt 120 extending between two rotation points 130, 132, which can be gears, sprockets, pulleys, idlers, etc., one of which may be driven.

[0031] Engaged with the belt 120 is a ring tensioner 140. When one of the rotation points 130, 132 is driven or otherwise rotates so that the belt 120 rotates, e.g., clockwise, the generally annular ring tensioner 140 rotates in the same direction, e.g., also rotates clockwise, as it is engaged with both the top side or span and the bottom side or span of the belt 120. During rotation of the belt 120, the ring tensioner 140 constantly acts on both spans with the same diametrically directed tensioning force and the same damping.

[0032] The ring tensioner 140 is not attached, mounted, or otherwise fixed to any solid or stationary structure, but rather, the ring tensioner 140 is held in place, between the two spans of the belt 120, by the belt 120. It could be said that the ring tensioner 140 is floating.

[0033] The ring tensioner 140 increases the tension within the belt 120 by adjusting the tracking position of the belt 120. The presence of the ring tensioner 140 increases the distance between the top span and the bottom span of the belt 120, thus increasing the path of the belt

120. Additionally, in some systems, the presence of the ring tensioner 140 more evenly distributes the tension across the top span and the bottom span. Without a ring tensioner, the span pulled by the driver has a much greater tension than the span pushed by the driver; the presence of the ring tensioner 140 reduces the tension on the pulled span and increases the tension on the pushed span. In some systems, smoother belt running is experienced, evidenced by reduced noise and chatter.

[0034] For ring tensioners 140 that include side flanges, installing the tensioner 140 between the belt spans can be difficult, as the side flanges have a greater diameter than the belt-engaging surface of the tensioner on which the belt 120 rides, requiring the belt 120 to be installed over the side flange. Thus, to facilitate installing the flanged tensioner 140 between the belt spans, the tensioner 140 is flexible, so that the tensioner 140 can be compressed to fit between the belt spans. Flexible tensioners, however, may have a reduced life due to their flexible nature. Additionally, in some systems, the ring tensioner 140 is so flexible that the force of the top span and the bottom span of the belt 120 distorts (e.g., crushes) the tensioner 140, reducing and sometimes even eliminating the tensioning benefit.

[0035] FIGS. 2A and 2B and FIG. 2C show a common belt system 200, 200' utilizing a too flexible, or insufficiently rigid, ring tensioner. The belt system 200, 200' includes a flexible belt 220 extending between two rotation points 230, 232, one of which may be driven. In FIGS. 2A and 2B, the rotation points 230, 232 are fixed, having a fixed center-to-center distance C1. In FIG. 2C, at least one of the rotation points 230, 232 is moveable, allowing adjustment of the center-to-center distance; in FIG. 2C, the center-to-center distance is C2, with C2 being greater than C1. In both systems 200, 200', the two rotation points 230, 232 have a diameter D1.

[0036] As seen in FIG. 2A, the endless flexible belt 220 is sufficiently long to be installed over the rotation points 230, 232, including over any flange that may be present on the rotation points 230, 232 to inhibit fall-off of the belt 220. However, after having been installed on the rotation points 230, 232 having the fixed center-to-center distance C1, some tension must be applied to the long, loose belt 220. A ring tensioner, having a diameter greater than D1, is inserted between the two spans of the belt 220 to apply tension to the belt 220; in some designs, the diameter of the ring tensioner is about 50 mm (5 cm) greater than D1. As the length of the belt increases, the diameter of the ring tensioner increases. The ring tensioner is typically a

flanged ring tensioner, having raised flanges on the sides to maintain the belt 220 on the tensioner.

[0037] During the installation process of the ring tensioner between the spans of the belt 220, the ring tensioner undergoes an amount of compression or deflection, often a high degree of deflection, e.g., from a circular shape shown as 240 to an oval shape shown as 242 in FIG. 2B. This deflection is needed to be able to fit the tensioner between the belt spans; the deflection needed is greater when the tensioner has side flanges. To provide flexibility to the ring tensioner, so that it can readily change from a circular shape 240 to an oval shape 242, the ring tensioner may be made from plastic. Plastic, however, in some designs, is less strong than other materials such as metals. Additionally, repeated bending and distorting of a ring, whether plastic or metal, weakens the ring tensioner over time.

[0038] One design to eliminate the need to distort the ring tensioner in order to install it between the spans of the belt 220 is to have an adjustable system, such as system 200' in FIG. 2C, where one or both of the rotation points 230, 232 is moveable, allowing adjustment of the center-to-center distance C2 to a greater distance after installation of the tensioner.

[0039] However, many synchronous belt systems do not have adjustable elements. Thus, a better flanged ring tensioner and a better way to install the tensioner is desired. FIGS. 3 through 7 illustrate such a flanged ring tensioner.

[0040] Returning to FIG. 2C, however, and to FIG. 2D, an example of a floating ring tensioner is shown. In FIG. 2C, the system 200' (whether having fixed rotation points 230, 232 or adjustable points) has the belt 220 around the rotation points 230, 232 and the ring tensioner 250, the belt having a top span 222 and a bottom span 224. When the ring tensioner 250 is installed between the spans 222, 224 and before start up, the tension on both spans 222, 224 is essentially the same and the center axis of the ring tensioner is aligned with the rotation points 230, 232. Assuming the rotation point 230 is the drive wheel, turning in a clockwise direction, and the rotation point 232 is the driven wheel, when the system 200' is started, as in FIG. 2D, the system 200" now has a high load, pulling the bottom span 224 and pushing the top span 222, due to the high tension on the driven wheel and on the bel 220. This tension on the belt 220 is transferred to the ring tensioner 250. In such a manner, the ring tensioner 250 "floats" above the center line of the rotation points 230, 232, depending on the load resistance of the driven wheel.

[0041] As for a better flanged ring tensioner and a better way to install the tensioner, attention is directed to FIGS. 3 through 7.

[0042] FIG. 3 shows a ring tensioner 300 for use in a belt system such as the system 100 of FIG. 1. The ring tensioner 300 has an annular ring or sprocket body 302 having a first side 304 and a second side 306. The body 302 includes a belt-receiving surface 305 between the first side 304 and second side 306; the belt-receiving surface 305 is the peripheral surface of the tensioner 300 contacted by the belt when the tensioner 300 is installed in a system such as the system 100. Opposite the belt-receiving surface 305 is an interior surface 308 of the body 302.

[0043] In this design, the belt-receiving surface 305 is formed by a plurality of parallel teeth or rungs 310 extending across the belt-receiving surface 305. The teeth 310 engage with lands present between teeth of the belt, when the belt is installed on the tensioner 300. The teeth 310 may run lateral across the belt-receiving surface 305 and orthogonal to the sides 304, 306, or may be at an angle thereto.

[0044] At the first side 304 of the ring tensioner 300 is a first circumferential flange 314 and present at the second side 306 is a second circumferential flange 316, the flanges 314, 316 having a radius greater than the radius of the belt-receiving surface 305 so that the flanges 314, 316 extend above the belt-receiving surface 305. At least one of the flanges 314, 316 is separable from the body 302 and the belt-receiving surface 305. FIG. 4 shows the flange 316 removed from the body 302. In this implementation, the flange 314 is integral with the body 302, although in other implementations the flange 314 may also be removable from the body 302.

[0045] The flange 316 is present on an annular flange body 320, which includes the flange 316 extending radially therefrom and a plurality of engagement tabs 330 extending orthogonal to the flange 316, so that when the flange body 320 is engaged with the body 302, the tabs 330 extend laterally across the body 302 toward the first side 304. The tabs 330 have a cantilevered arm 332 having a catch 326 thereon. Present on the interior surface 308 of the body 302 are various mechanisms to engage with the tab 330 and retain the flange body 320 to the body 302. The flange body 320 with the flange 316 can be repeatedly engaged with and removed from the body 302. It is noted that other implementations of the body 302 of the ring tensioner 300 and/or the flange body 320 may have a solid center or be other shape rather than annular.

[0046] Turning to FIG. 5, a cross-section of a portion of the ring tensioner 300, having the flange body 320 engaged with the body 302, is shown. Seen in FIG. 5 is the flange 314, which is integral with the body 302, the belt-receiving surface 305, and the flange body 320 with the flange 316. As previously shown in FIG. 4, the flange body 320 has the tab 330 extending therefrom. The arm 332 of the tab 330 has a distal end 335 and positioned on the arm 332 is the catch 334 having a ramp 336 on the distal side thereof. The proximal side of the catch 334 defines a shoulder 338 (not called out in FIG. 5 but seen in FIG. 4).

[0047] When the flange body 320 is engaged with the body 302, the tab 330, particularly the shoulder 338, is engaged with a ridge or bump 340 present on the interior surface 308 of the body 302. The bump 340 may extend around the entire inner circumference of the interior surface 308 or may be present only at locations where the tab 330 resides when engaged.

[0048] The arm 332 is sufficiently flexible to distort a sufficient distance to have the catch 334 clear (e.g., pass over) the bump 340 in both directions. Additionally, the arm 332 is sufficiently flexible so that the distal end 335 of the arm 332 can be moved (e.g., manually, e.g., by a tool) to release the catch 334 from the bump 340.

[0049] The engagement of the catch 334 of the arm 332 with the bump 340 is, in general, sufficiently robust to retain the flange body 320 with the body 302. In some implementations, however, a different or additional physical engagement or fastener is included. For example, a screw, rivet, peg, clip or other mechanical fastener could be included with the catch 334 or used in lieu of the catch 334 and arm 332 to secure the flange body 320 to the body 302.

[0050] The body 302 includes a protrusion 322 (FIGS. 4 and 5) that seats within and engages with a groove 324 in the flange body 320 to ensure proper alignment of the flange body 320 with the body 302. The protrusion 322 and the groove 324 may extend around the entire inner circumference or may be only present proximate the tab 330 when engaged.

[0051] In FIG. 6, another cross-section of a portion of the ring tensioner 300, having the flange body 320 engaged with the body 302, is shown. As in FIG. 5, the flange 314, the belt-receiving surface 305 (not called out in FIG. 6), and the flange body 320 with the flange 316 are seen, as are the protrusion 322 and the groove 324. In this view, however, no tab (e.g., tab 330) is present engaging with the bump 340 on the interior surface 308 of the body 302. A belt 620 is also included in FIG. 6.

[0052] As indicted above, the protrusion 322 and the groove 324 provide structural robustness, e.g., against deflection due to compressive force from the belt tension, the force shown as D in FIG. 6. This compressive force D acts on the engaged ring tensioner body 302 and the flange body 320, deflecting both bodies 302, 320.

[0053] Returning to FIG. 4, the interior surface 308 of the body 302 includes anti-rotation features 318, such as ribs, that inhibit the rotational movement of the flange body 320 in relation to the body 302, or at least provide a stop to an amount of rotational movement. The anti-rotation features 318 may additionally facilitate proper alignment of the tabs 330 into the body 302 and against the interior surface 308. FIG. 7, a cross-sectional view of the ring tensioner 300, shows the tabs 330 seated between the ribs 318.

[0054] The ring tensioner 300 has a diameter and a width (from the first side 304 to the second side 306) configured for the belt system in which it is to be installed. The width of the belt-receiving surface 305, which is less than the width between the flanges 314, 316, is no less than the width of the belt, but may be greater than the width of the belt.

[0055] The ring tensioner 300 should be sufficiently rigid to inhibit compression or deflection in the radial direction, and if compressed, sufficiently elastic to return to an uncompressed shape.

[0056] Turning to FIGS. 8 through 11, installation of a ring tensioner of this disclosure and variations thereof, such as the ring tensioner 300, in a belt system 800, similar to the system 100 of FIG. 1, is shown. The belt system 800 that includes a flexible belt 820 extending between two rotation points 830, 832, which can be gears, sprockets, pulleys, idlers, etc., one of which may be driven. The belt 820, situated on the rotation points 830, 832, has a top span 822 and a bottom span 824. Prior to installation of a ring tensioner, the belt 820 is loose, having slack allowing the belt to move between a first position A and a second position B (represented by dashed line) where the spans 822, 824 are closer together, as seen in FIG. 8.

[0057] In FIG. 9, the body 302 of the ring tensioner 300 is inserted between and seated between the top span 822 and the bottom span 824 of the belt 820, with the body 302 positioned so that the side without a flange is inserted between the spans 822, 824. FIG. 10 shows the body 302 being pushed in the direction P in relation to the top span 822. In such a manner, the body 302 does not need to be compressed to accommodate the increased diameter of the flange, as no flange is passed between the spans 822, 824; the belt-receiving

surface 305 is merely slid between the spans 822, 824, stopping short of reaching the flange 314.

[0058] In FIG. 11, the flange body 320, having the flange 316, is slid onto the installed body 302 so that the tab 330 on the flange body 320 seats between ribs 318 on the interior surface 308 of the body 302, and the catch 334 engages with the bump 340 (as seen in FIG. 5), thus locking the flange body 320 to the body 302, forming the completed ring tensioner 300. Having the arm 332 seated between the ribs 318 inhibits rotation of the flange body 320 in relation to the body 302. In some implementations, if the flange body 320 is incorrectly aligned with the body 302 and the ribs 318, in a manner so that the arm 332 is not seated between the ribs 318, some relative rotation of the flange body 320 in relation to the body 302 may occur until the arm 332 meets a rib 318 that stops further rotation.

[0059] Because there is no flange being pushed under the belt span 822 or above the belt span 824 during this installation of the ring tensioner 300, the body 302 does not need to undergo deflection against the compressive force (D in FIG. 6) and can be designed with higher structure robustness than a flexible ring tensioner without any installation issues. Increased robustness can be due to, e.g., increased wall thickness of the body 302 and the flange. With this low flexibility design, the ring tensioner 300 and variations thereof can be used in a wide range of systems, having compressive force of, e.g., 0 to 1000 N.

[0060] As indicated above, in order for the ring tensioner to apply proper tension to the belt, the diameter of the ring tensioner is greater than the diameter of the rotation points. However, compressive force is applied on the ring tensioner by the belt due to this increased diameter. The compressive force must be factored in when designing a flanged ring tensioner; too flexible of a ring tensioner may compress due to the belt compressive force, reducing the tension on the belt. Having at least one flange removeable from the ring tensioner allows for a more robust and sturdy tensioner that withstands higher compressive force and can provide proper belt tension.

[0061] To remove the ring tensioner 300 from the system 800 and the belt 802, the flange body 320 is removed from the body 302, by releasing the shoulder 338 of the ramp 336 from the bump 340; this can be done by flexing the arm 332 to release the shoulder 338 from the bump 340. A tool such as a screwdriver, bolt, pencil/pen, or a special tool may be used to flex

the distal end 335 of the arm 332; in some implementations, no tool is needed, but merely manual manipulation with one's finger is sufficient.

[0062] The ring tensioner 300 and variations thereof may be installed in a belt that runs vertical, horizontal, or diagonal, or one that has multiple directions (e.g., an "L" shaped belt path). As indicated above, the ring tensioner may be centered equidistant between two rotation points or may be positioned closer to one point than the other. More than one ring tensioner may be used in a belt, e.g., between two rotation points or in each leg of an "L" shaped belt path. The ring tensioner 300 may be inserted equidistant between the two rotation points or may be positioned closer to one point (e.g., sprocket) than the other.

[0063] During operation, the ring tensioner 300 rotates in conjunction with the belt. That is, one ring side (e.g., the top side) rotates with the belt (e.g., the top span) in the same direction as the belt while the opposite ring side (e.g., the bottom side) rotates with the belt (e.g., the bottom span) in the same direction as the belt, which is the opposite direction of the first side. Consequently, the ring tensioner 300 center remains stationary regardless of belt speed.

[0064] FIGS. 12 through 15 show another implementation of a ring tensioner having at least one removable and replaceable side flange. This particular ring tensioner has two removable and replaceable side flanges.

[0065] FIGS. 12 and 13 shows a ring tensioner 1200 for use in a belt system such as the system 100 of FIG. 1. Similar to the ring tension 300, the ring tensioner 1200 has an annular ring or sprocket body 1202 having a first side 1204 and a second side 1206. The body 1202 includes a belt-receiving surface 1205 between the first side 1204 and second side 1206; the belt-receiving surface 1205 is the peripheral surface of the tensioner 1200 contacted by the belt when the tensioner 1200 is installed in a system such as the system 100. The belt-receiving surface 1205 is formed by a plurality of parallel teeth or rungs 1210. Opposite the belt-receiving surface 1205 is an interior surface 1208 of the body 1202.

[0066] At the first side 1204 is a first circumferential flange 1214 and at the second side 1206 is a second circumferential flange 1216, the flanges 1214, 1216 having a radius greater than the radius of the belt-receiving surface 1205, so that the flanges 1214, 1216 extend above the belt-receiving surface 1205. At least one of the flanges 314, 316 is separable from the body 1202 and the belt-receiving surface 1205. In this particular implementation, both flanges 1214, 1216

are separable from the body 1202. FIG. 14 shows the flange 1214 and the flange 1216 both removed from the body 1202.

[0067] Each of the flanges 1214, 1216 is releasably secured to the body 1202 by a plurality of fasteners such as bolts, pegs, pins, screws, rivets, or the like. A plurality of first pins 1224 are used to hold the first flange 1214 to the body 1202 and a plurality of second pins 1226 are used to hold the second flange 1216 to the body 1202. A sleeve 1225, described further below, retains the pins 1224, 1226.

[0068] Each of the flanges 1214, 1216 includes slots 1234, 1236, respectively, through which the pins 1224, 1226 pass, holding the flanges 1214, 1216 to the body 1202; see FIG. 12 for the slots 1234, 1236. The body 1202 includes receivers 1222, such as a bore or threaded bore, for receiving the pins 1224, 1226.

[0069] FIG. 15 shows the engagement of a first pin 1224, a sleeve 1225 and a second pin 1226 securing the flanges 1214, 1216 to the sprocket body 1202. In this particular implementation, the distal end of the first pin 1224 is received in the distal end of the second pin 1226, both of which are seated in the sleeve 1225. The sleeve 1225 has a set length that defines a minimum width of the tensioner 1200 from the first side 1204 to the second side 1206. Because of the length of the sleeve 1225, the pins 1224, 1226 cannot be pushed together too far.

[0070] In other implementations, the pins 1224, 1226 or other fasteners may engage directly with the body 1202 and not with each other; for example, a threated bolt may be received in a threaded hole on each side 1204, 1206 of the body 1202, or spring-loaded, press-fit pins may be received in a bore.

[0071] The pins 1224, 1226 are secured so that the fit between the flanges 1214, 1216 and the body 1202 is not tight, but sufficiently loose to allow relative movement (e.g., sliding) of the flanges 1214, 1216 in relation to the body 1202 a distance allowable by the length of the slots 1234, 1236; this allows the body 1202 to flex or distort (e.g., under load from a belt retained thereon) without having the flanges 1214, 1216 distort. Additionally, this allows the flanges 1214, 1216 to be used with different diameter bodies. By including the sleeve 1225, which fixes a minimum width, the pins 1224, 1226 can only be pushed together the length of the sleeve 1225, inhibiting too tight of a fit between the flanges 1214, 1216 and the body 1202. A washer or other spacer may be present between the body 1202 and the flanges 1214, 1216 to inhibit

catching/sticking between the body 1202 and the flanges 1214, 1216, e.g., as the relative position thereof changes.

[0072] Similar to the ring tensioner 300, the ring tensioner 1200 has a diameter and a width (from the first side 1204 to the second side 1206) configured for the belt system in which it is to be installed. The width of the belt-receiving surface 1205, which is less than the width between the flanges 1214, 1216, is no less than the width of the belt, but may be greater than the width of the belt.

[0073] The ring tensioner 1200 should be, buy may not be, sufficiently rigid to inhibit compression or deflection in the radial direction. As explained above, the slots 1234, 1236 into which the pins 1224, 1226 are received, allow radial movement of the pins 1224, 1226 in relation to the flanges 1214, 1216 to accommodate compression or deflection of the body 1202.

[0074] Similar to the ring tensioner 300, installation of the ring tensioner 1200 in a belt system, similar to the system 100 of FIG. 1, includes inserting the body 1202 (with no flanges attached thereto) between the top span and the bottom span of the belt. After seating of the body 1202 in or on the belt, the sleeves 1225 are inserted into the receivers 1222 in the body 1202. The second flange 1216 is aligned on the body 1202 and the pins 1226 are inserted through the slots 1236 into the sleeves 1225. The first flange 1214 is then aligned on the body 1202 and the pins 1224 are inserted through the slots 1234 into the second pins 1226. To remove the ring tensioner 1200 from the belt, one or both flanges 1214, 1216 are removed from the body 1202 by removing the pins 1224, 1226, with the first flange 1214 being removed first.

[0075] In an alternate installing method of the ring tensioner 1200, the second flange 1216 is already connected to the body 1202 prior to inserting the body 1202 between the top span and the bottom span of the belt.

[0076] Examples of suitable materials for the ring tensioner 300, 1200 and variations thereof include polymer(s) (e.g., polycarbonate, polyamide, polyethylene, polyphthalamide), including fiber-reinforced polymers, metal (e.g., steel, stainless steel, nickel, iron, aluminum, alloys), and composite materials. The ring tensioner 300, 1200 could be molded, cast, 3D printed, or otherwise formed. In most implementations, the ring tensioner body 302 and the flange body 320 are formed separately; similarly, the ring tensioner body 1202 and the flanges 1214, 1216 are formed separately.

[0077] One skilled in materials will be able to design a ring tensioner 300, 1200 and variations thereof with appropriate fillers, reinforcing materials, additives, coatings, etc., as warranted to provide the desired ring tensioner.

[0078] Thus, described herein is at least one specific example of a ring tensioner having at least one removeable and replaceable flange.

[0079] The ring tensioners described herein and variations thereof may be incorporated into a broad range of belt drive systems. The ring tensioners can be used in numerous other systems including ABDS (accessory belt drive systems), SBDS (synchronous belt drive system), BSG (belt starter generator, e.g., for hybrid vehicles), water pumps, timing, etc. In general, the ring tensioners can be used with synchronous belts regardless of the application.

[0080] The above specification and examples provide a complete description of the structure and use of exemplary implementations of the invention. The above detailed description, therefore, is not to be taken in a limiting sense. It is to be understood that other implementations are contemplated and may be made without departing from the scope or spirit of the present disclosure. For example, both side flanges may be present as a separate and removable and replaceable piece from the main body of the ring tensioner having the belt-receiving surface. As another example, different engagement mechanisms, for attaching the removeable flange body to the main body, can be designed. The implementation illustrated in the figures has eight (8) tabs for engaging the flange body with the ring body; other numbers of tabs may be used, e.g., three (3), four (4), six (6), etc.

[0081] Additionally, elements or features of one example, embodiment or implementation may be applied to any other example, embodiment or implementation described herein to the extent such contents do not conflict. The above detailed description, therefore, is not to be taken in a limiting sense.

[0082] While the present disclosure is not so limited, an appreciation of various aspects of the disclosure will be gained through a discussion of the examples provided.

[0083] Unless otherwise indicated, all numbers expressing feature sizes, amounts, and physical properties are to be understood as being modified by the term "about," whether or not the term "about" is immediately present. Accordingly, unless indicated to the contrary, the numerical parameters set forth are approximations that can vary depending upon the desired

properties sought to be obtained by those skilled in the art utilizing the teachings disclosed herein.

[0084] As used herein, the singular forms "a", "an", and "the" encompass implementations having plural referents, unless the content clearly dictates otherwise. As used in this specification and the appended claims, the term "or" is generally employed in its sense including "and/or" unless the content clearly dictates otherwise.

[0085] Spatially related terms, including but not limited to, "bottom," "lower", "top", "upper", "beneath", "below", "above", "on top", "on," etc., if used herein, are utilized for ease of description to describe spatial relationships of an element(s) to another. Such spatially related terms encompass different orientations of the device in addition to the particular orientations depicted in the figures and described herein. For example, if a structure depicted in the figures is turned over or flipped over, portions previously described as below or beneath other elements would then be above or over those other elements.

WHAT IS CLAIMED IS:

1. A ring tensioner comprising:

an annular belt-engaging surface;

a first circumferential flange on a first side of the belt-engaging surface; and

a second circumferential flange on a second side of the belt-engaging surface, the second circumferential flange removeable and replaceable in relation to the belt-engaging surface.

2. The ring tensioner of claim 1, wherein the second circumferential flange is radially moveable in relation to the annular belt-engaging surface.

3. The ring tensioner of claim 1, wherein the first circumferential flange is removeable and replaceable in relation to the belt-engaging surface.

4. The ring tensioner of claim 3, wherein the first circumferential flange and the second circumferential flange are moveable in relation to the annular belt-engaging surface.

5. The ring tensioner of claim 1 comprising a ring body having the annular belt-engaging surface and the first circumferential flange.

6. The ring tensioner of claim 5 comprising a flange body having the second circumferential flange, the flange body further comprising a plurality of tabs extending orthogonal to the second circumferential flange and configured to engage with the ring body.

7. The ring tensioner of claim 6, wherein the plurality of tabs are configured to engage with a bump on an interior surface of the ring body.

8. The ring tensioner of claim 7, wherein the plurality of tabs each comprise a catch configured to engage with the bump.

9. The ring tensioner of claim 7, wherein the bump is circumferential around the interior surface of the ring body.

10. The ring tensioner of claim 1, wherein the annular belt-engaging surface and the first circumferential flange form a first piece and the second circumferential flange is a second separate piece.

11. The ring tensioner of claim 1, wherein the annular belt-engaging surface is a first piece, the first circumferential flange is a second separate piece, and the second circumferential flange is a third separate piece.

12. The ring tensioner of claim 1, wherein the ring tensioner comprises a polymeric material.

13. The ring tensioner of claim 1, wherein the belt-engaging surface comprises a plurality of teeth.

14. A method of installing a ring tensioner in a synchronous belt, the method comprising:

inserting a ring body between a first span and a second span of the synchronous belt, the ring body having a belt-engaging surface; and

after inserting the ring body between the spans, engaging a side flange with the ring body.

15. The method of claim 14, wherein engaging the side flange comprises engaging tabs on a flange body of the side flange with the ring body.

16. The method of claim 14, wherein engaging the side flange comprises using a fastener through the side flange to connect the side flange to the ring body.

17. The method of claim 16, wherein the side flange is connected in a manner to allow relative radial movement of the side flange to the ring body.

18. The method of claim 14, further comprising, after engaging the side flange with the ring body, engaging a second side flange with the ring body.

19. The method of claim 18, wherein engaging the second side flange comprises using a fastener through the second side flange to connect the second side flange to the ring body.

20. The method of claim 19, wherein the second side flange is connected in a manner to allow relative radial movement of the second side flange to the ring body.

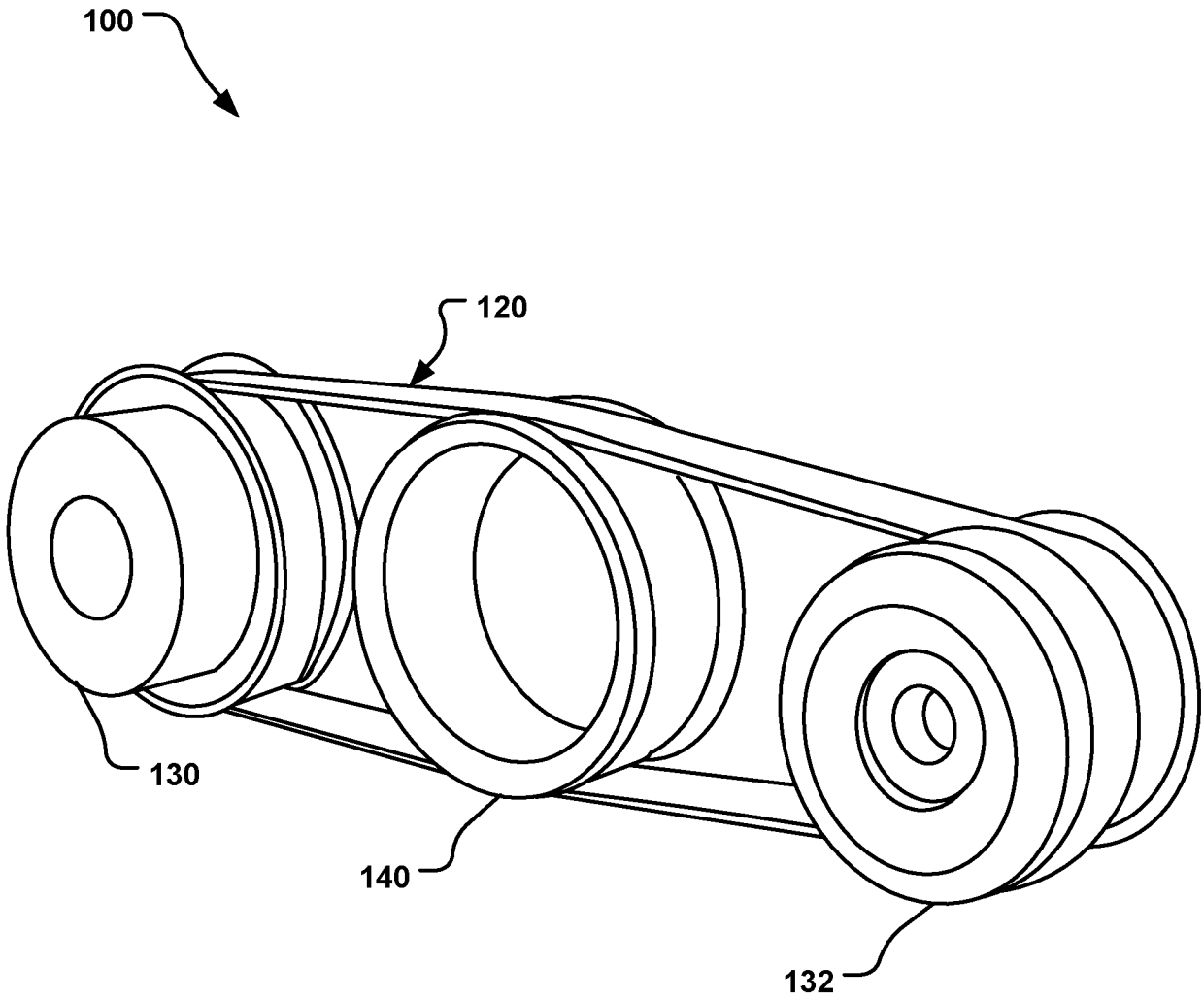

FIG. 1

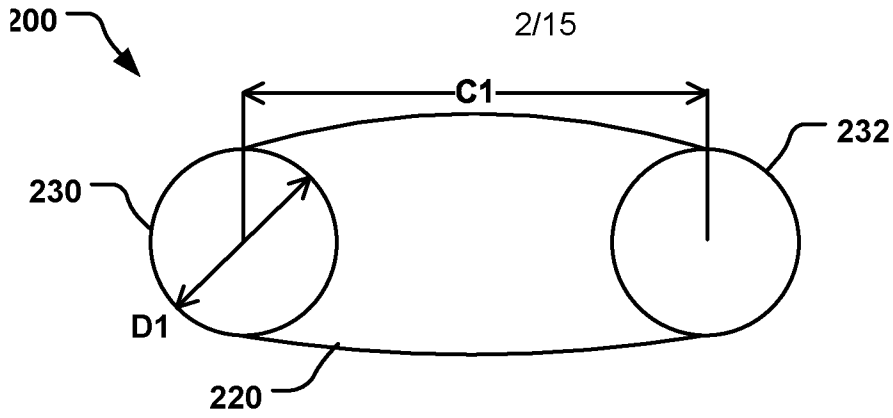

FIG. 2A

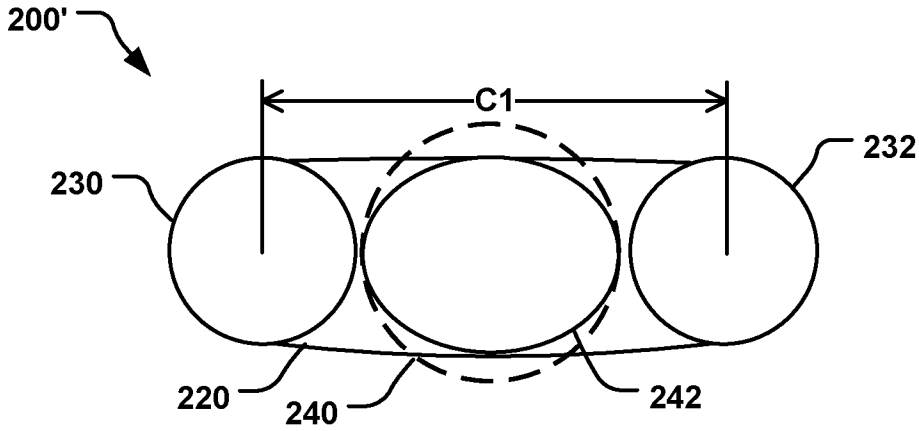

FIG. 2B

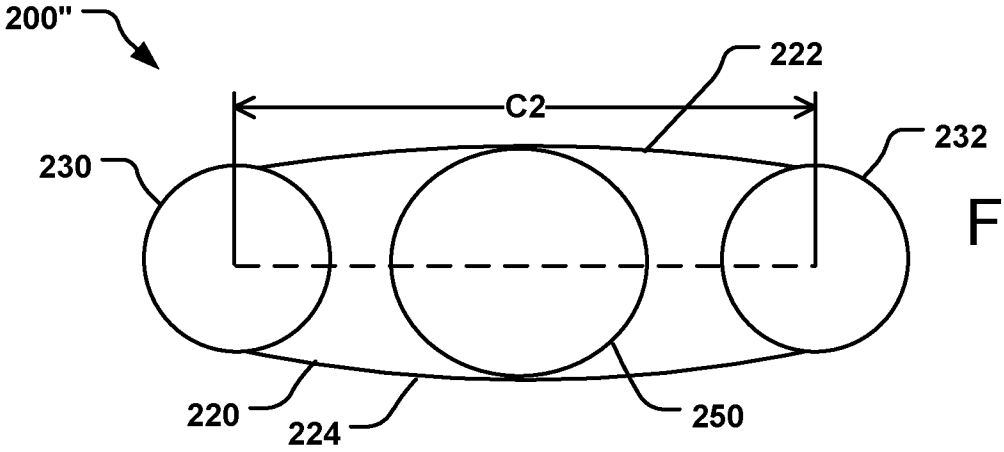

FIG. 2C

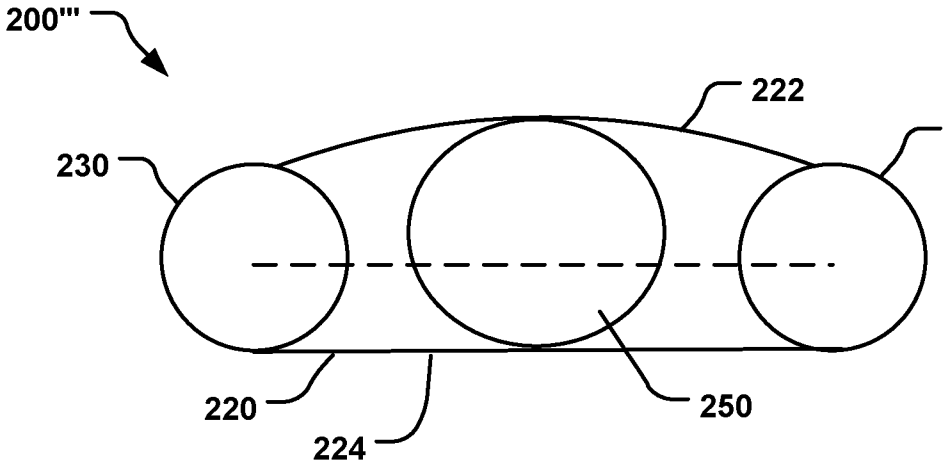

FIG. 2D

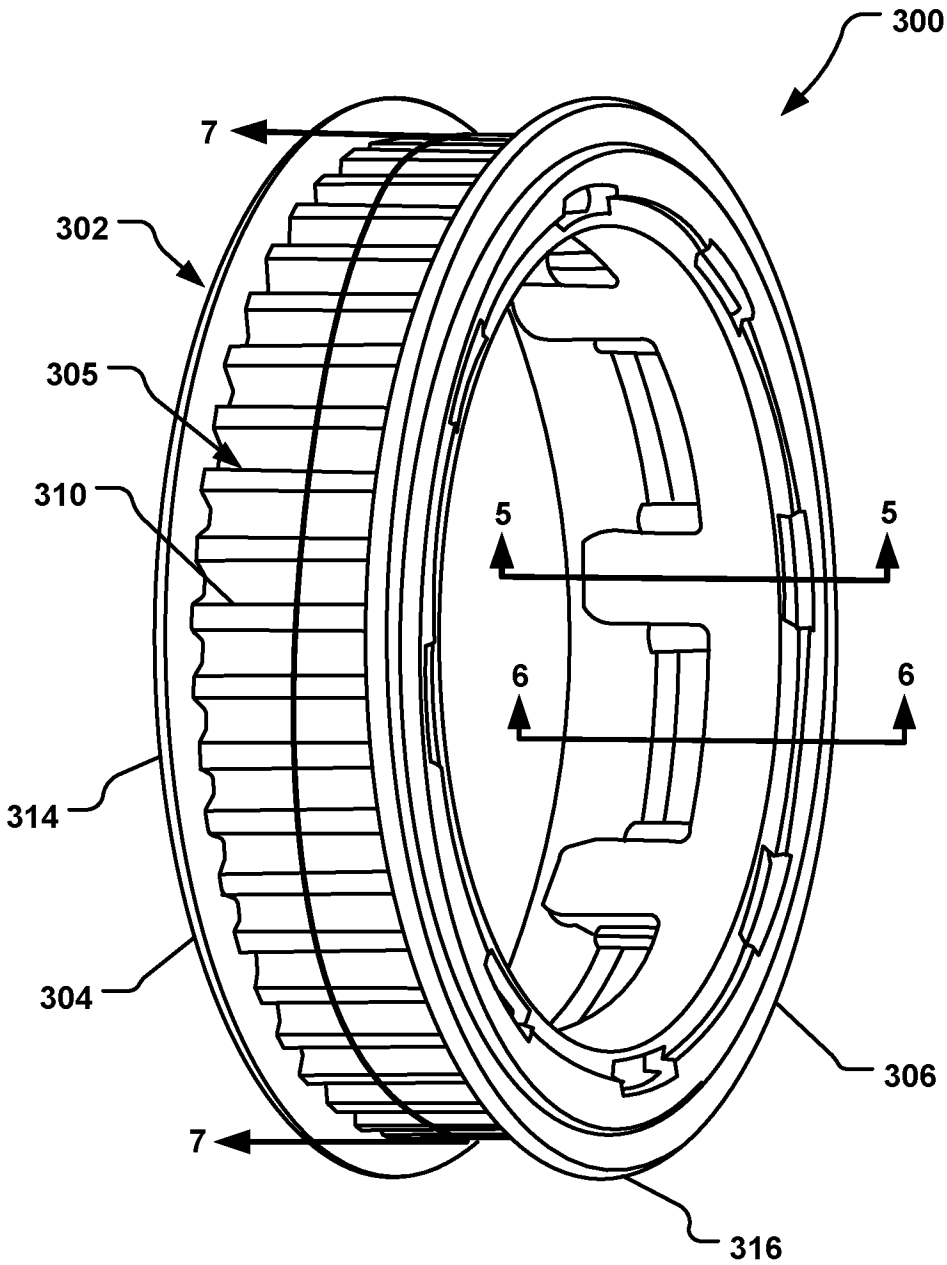

FIG. 3

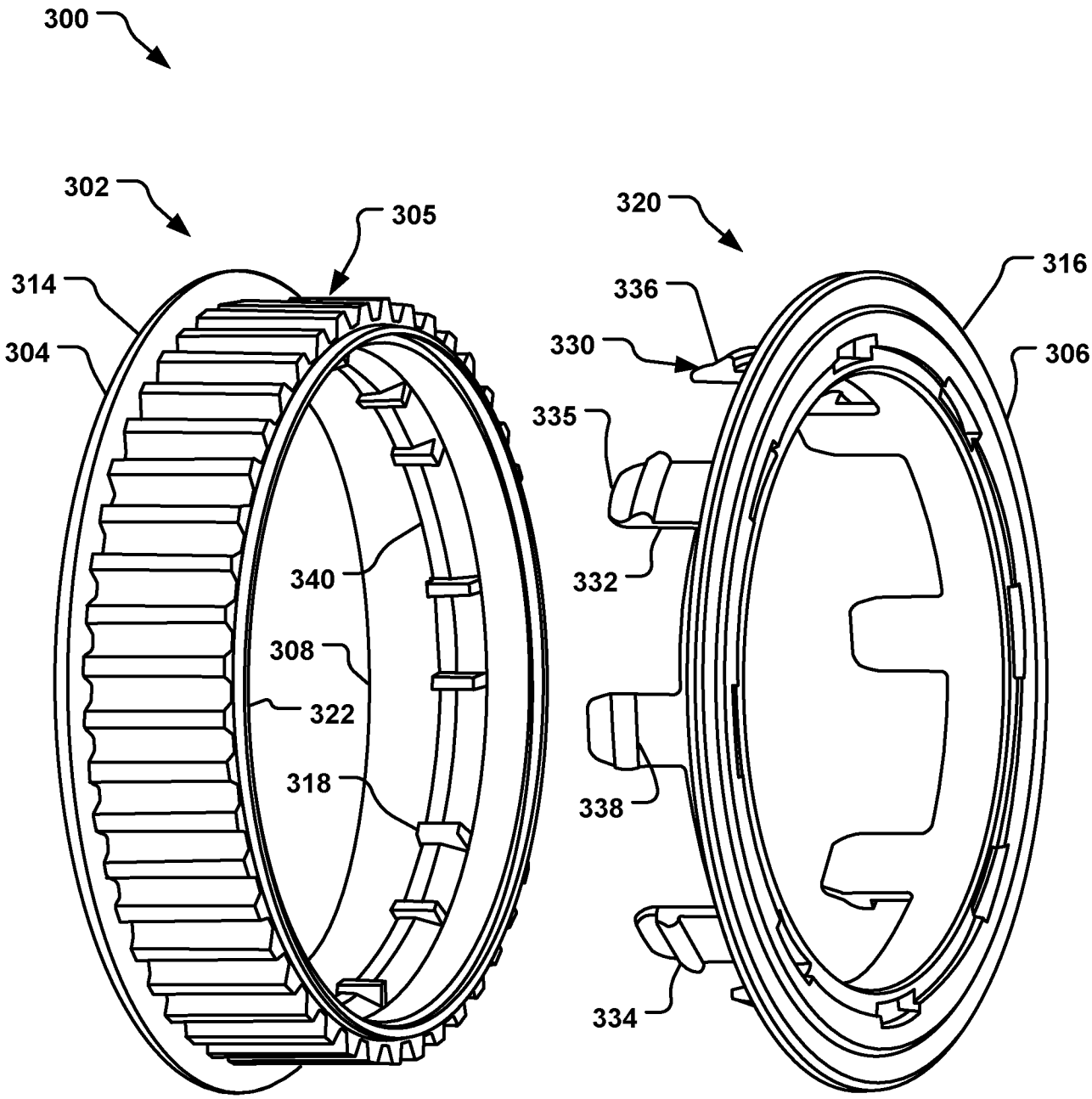
300
302
305
314
304
340
308
322
318
320
316
336
330
306
335
332
338
334

FIG. 4

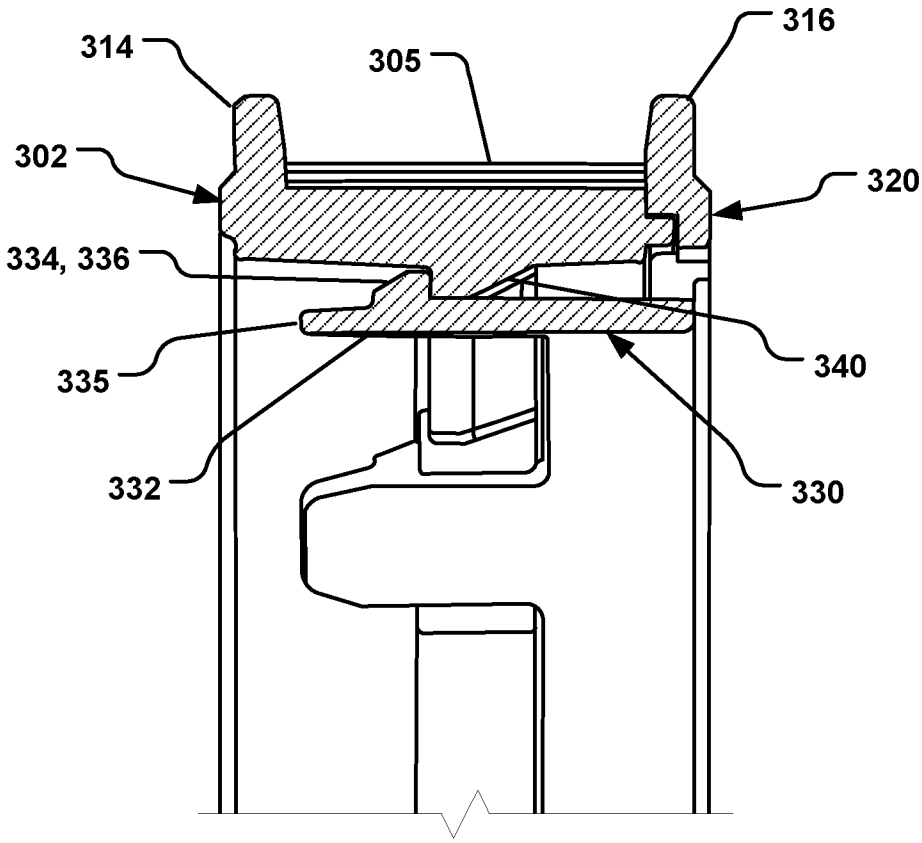

FIG. 5

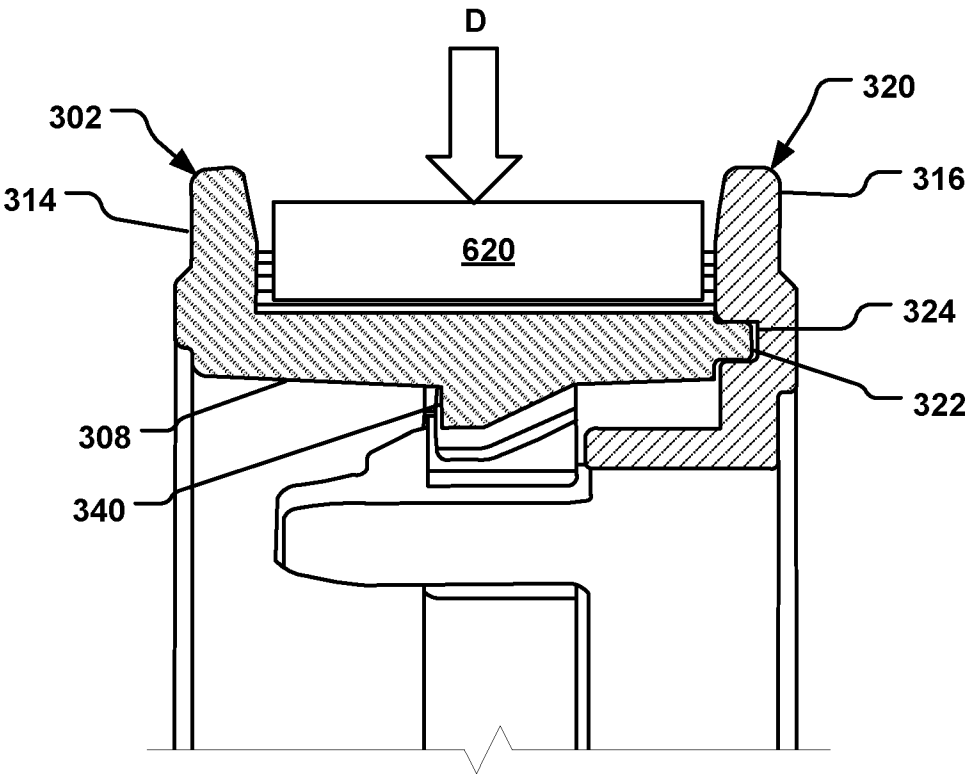

FIG. 6

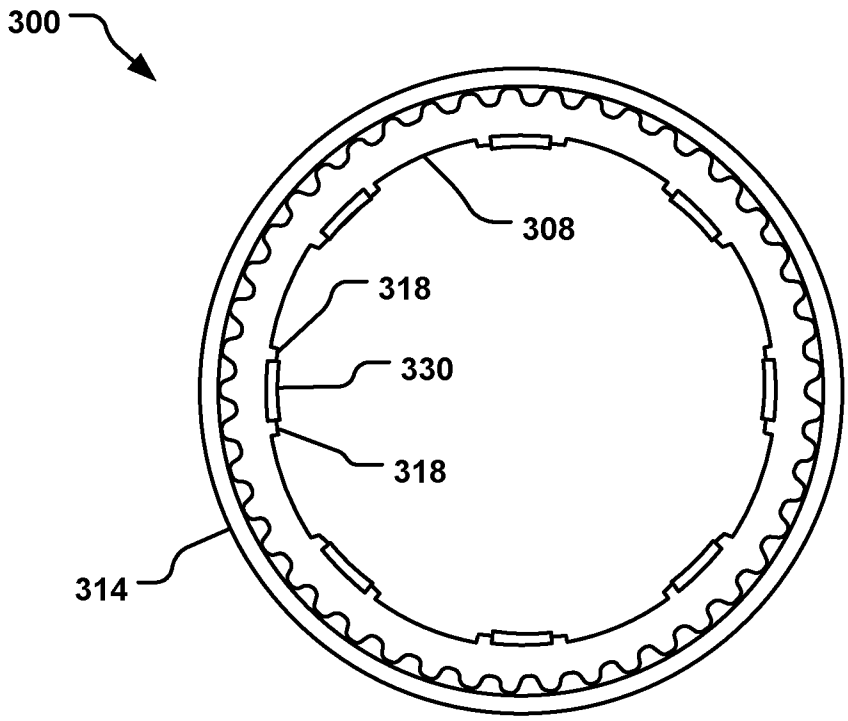

FIG. 7

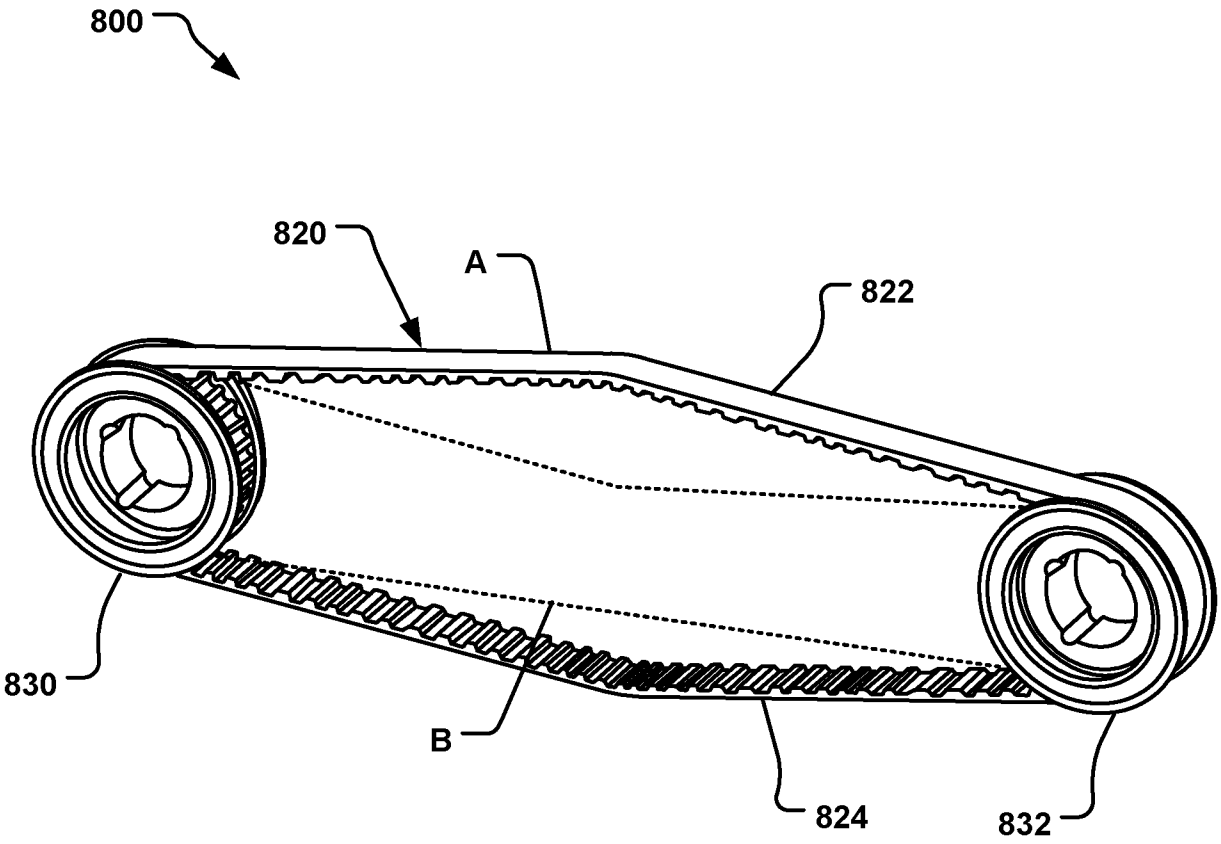

FIG. 8

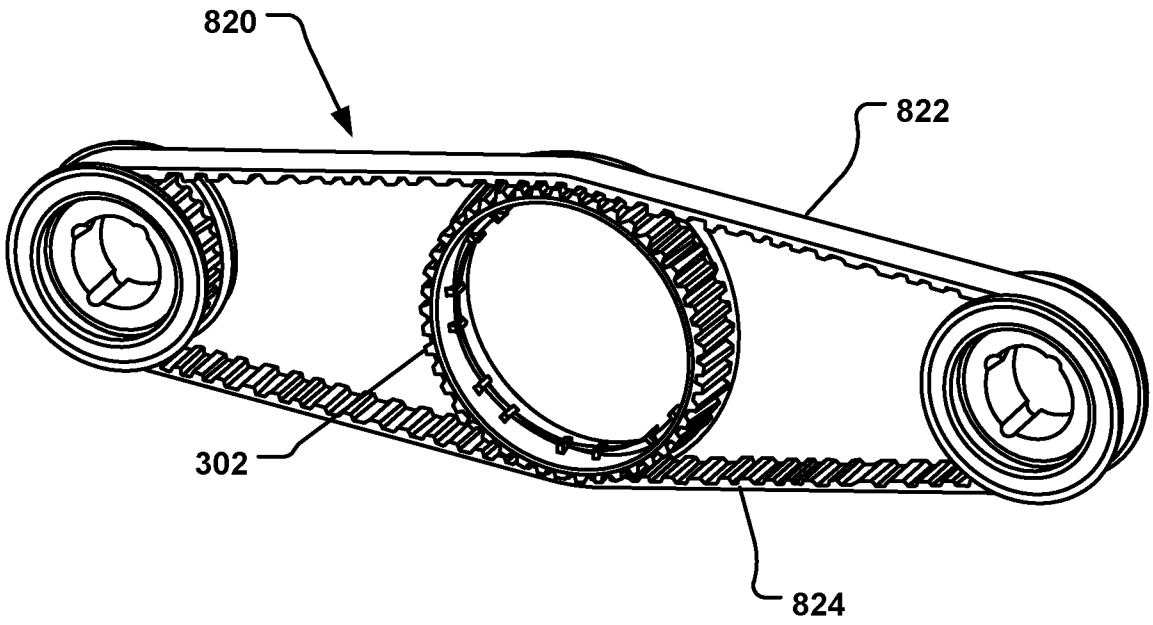

FIG. 9

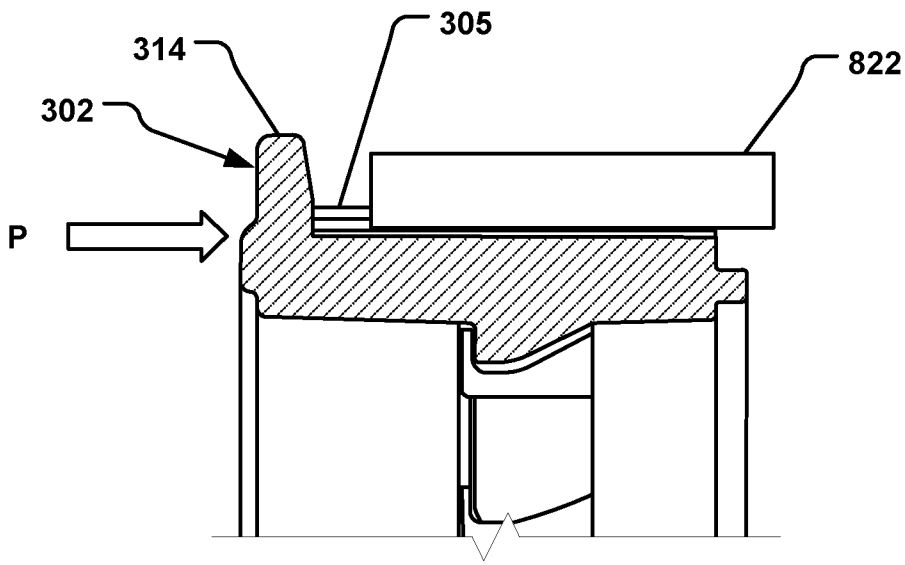

FIG. 10

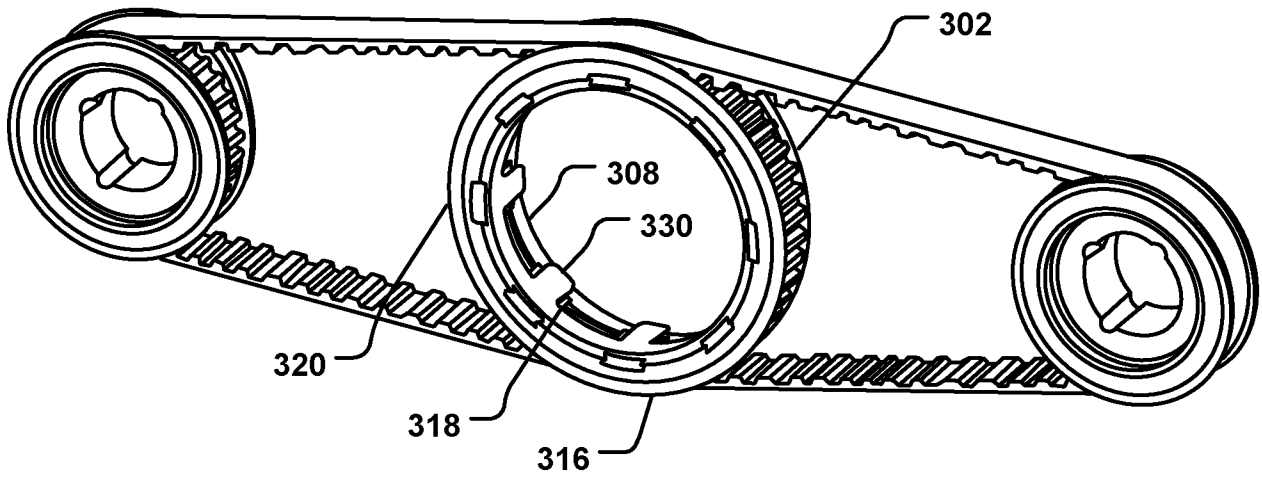

FIG. 11

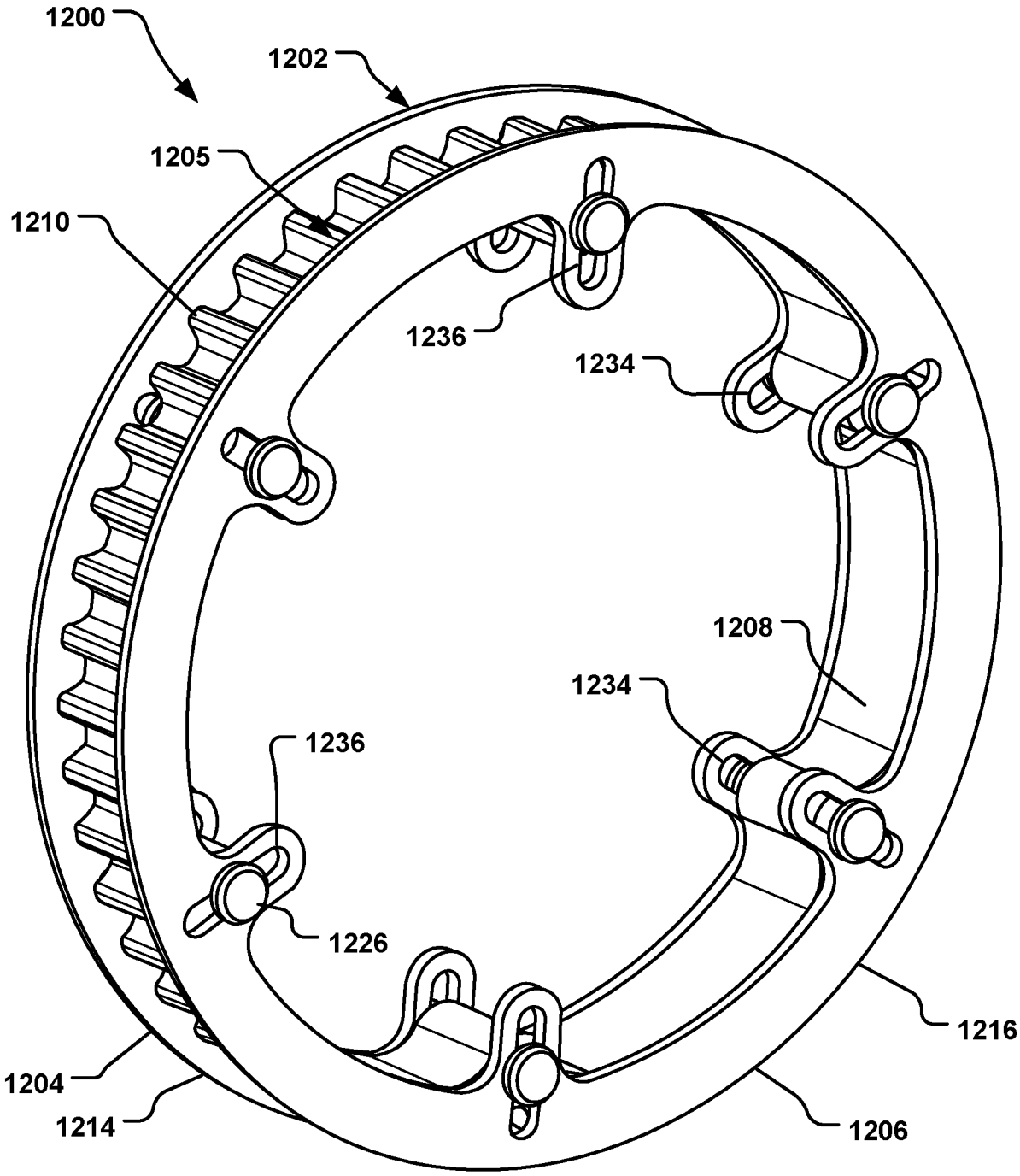
1200
1202
1205
1210
1236
1234
1208
1234
1236
1226
1216
1204
1214
1206

FIG. 12

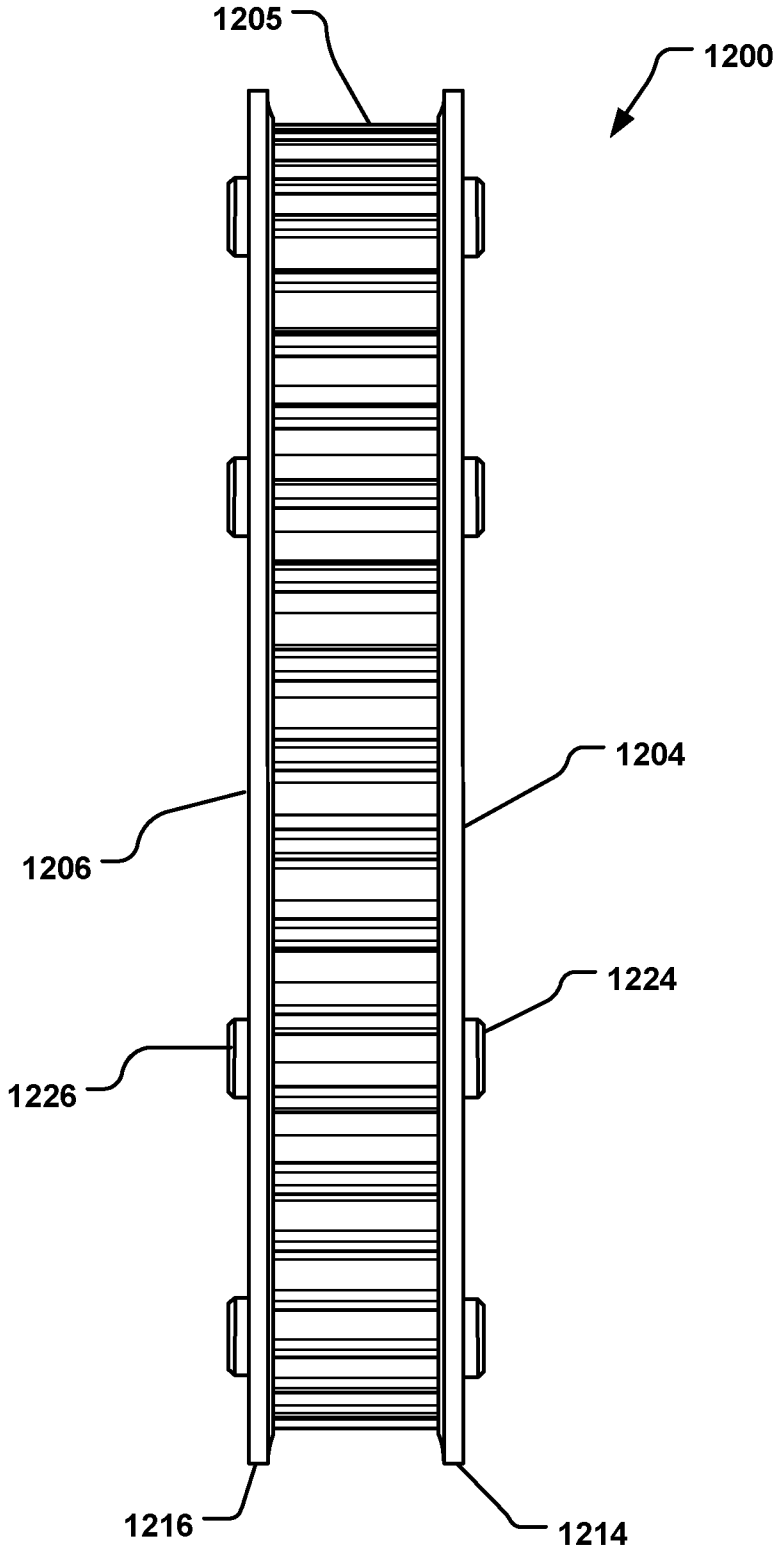

FIG. 13

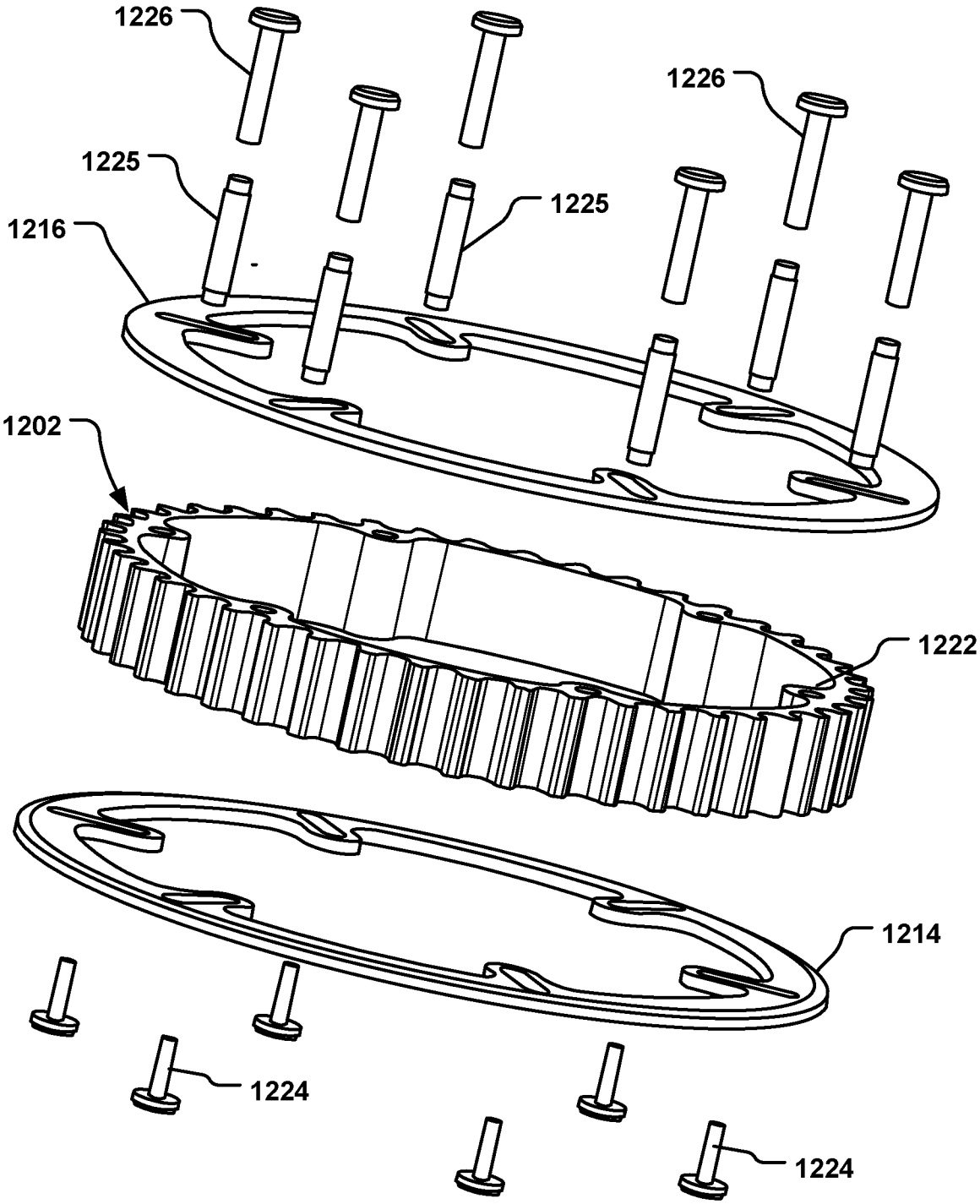

FIG. 14

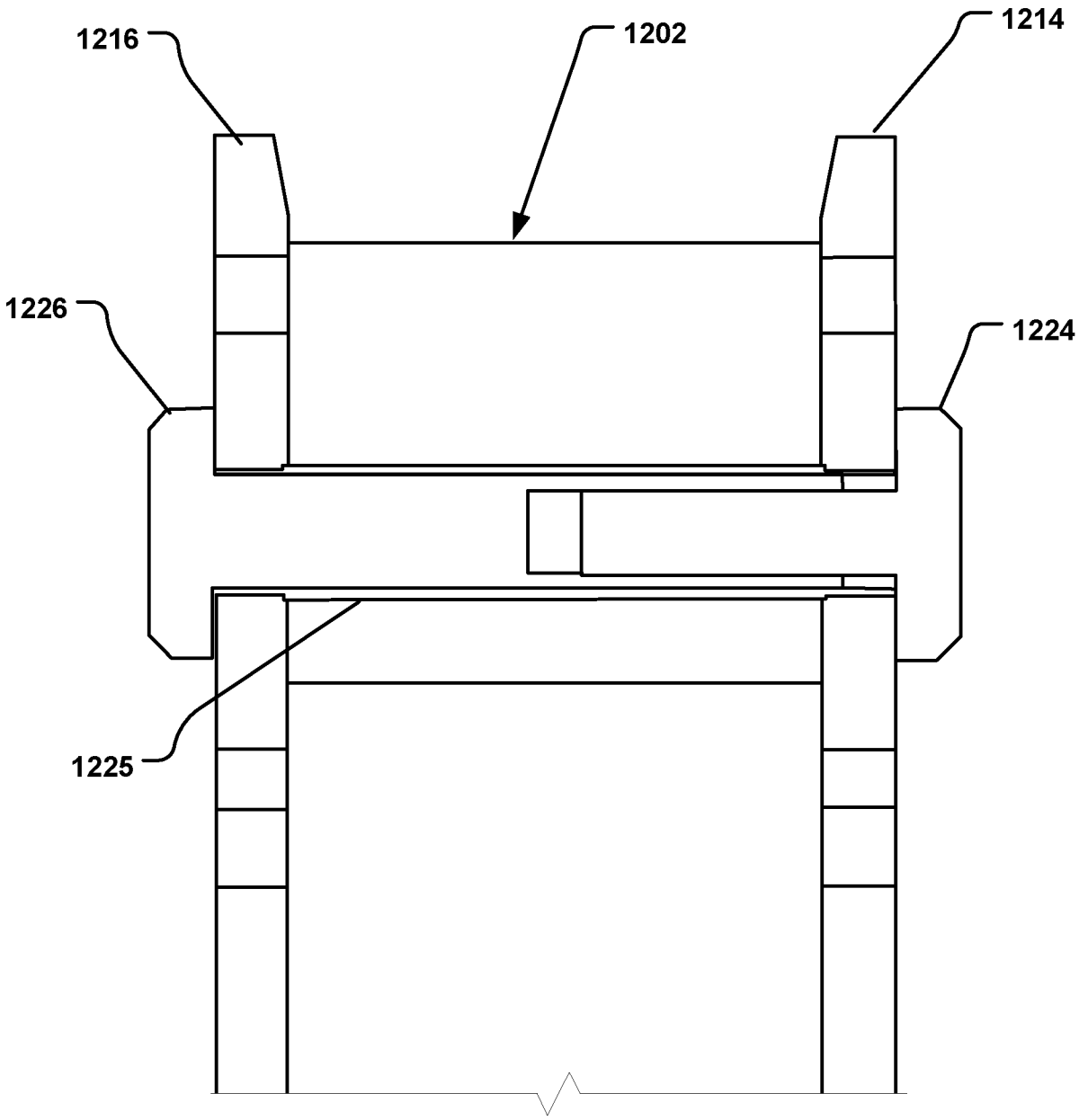

FIG. 15

INTERNATIONAL SEARCH REPORT

International application No.
PCT/US2024/035534

A. CLASSIFICATION OF SUBJECT MATTER

IPC: ***F16H 7/08*** (2024.01); ***F16H 7/02*** (2024.01); *F02B 67/06* (2024.01)

CPC: ***F16H 7/08; F16H 7/023;*** *F02B 67/06*

According to International Patent Classification (IPC) or to both national classification and IPC

B. FIELDS SEARCHED

Minimum documentation searched (classification system followed by classification symbols)

See Search History Document

Documentation searched other than minimum documentation to the extent that such documents are included in the fields searched

See Search History Document

Electronic data base consulted during the international search (name of data base and, where practicable, search terms used)

See Search History Document

C. DOCUMENTS CONSIDERED TO BE RELEVANT

Category*	Citation of document, with indication, where appropriate, of the relevant passages	Relevant to claim No.
Y	EP 2014951 B1 (EBERT KETTENSPANNTECHNIK GMBH) 02 May 2012 (02.05.2012) see machine translation	1, 3, 5, 10-14, 16, 18, 19
Y	US 2009/0093328 A1 (DICKINGER et al.) 09 April 2009 (09.04.2009) entire document	1, 3, 5, 10-14, 16, 18, 19
A	US 4,828,536 A (AMPFERER) 09 May 1989 (09.05.1989) entire document	1-20
A	US 6,126,562 A (BRANGENFELDT) 03 October 2000 (03.10.2000) entire document	1-20
A	DE 102008011137 A1 (SCHAEFFLER KG) 27 August 2009 (27.08.2009) see machine translation	1-20

☐ Further documents are listed in the continuation of Box C. ☐ See patent family annex.

* Special categories of cited documents:
"A" document defining the general state of the art which is not considered to be of particular relevance
"D" document cited by the applicant in the international application
"E" earlier application or patent but published on or after the international filing date
"L" document which may throw doubts on priority claim(s) or which is cited to establish the publication date of another citation or other special reason (as specified)
"O" document referring to an oral disclosure, use, exhibition or other means
"P" document published prior to the international filing date but later than the priority date claimed
"T" later document published after the international filing date or priority date and not in conflict with the application but cited to understand the principle or theory underlying the invention
"X" document of particular relevance; the claimed invention cannot be considered novel or cannot be considered to involve an inventive step when the document is taken alone
"Y" document of particular relevance; the claimed invention cannot be considered to involve an inventive step when the document is combined with one or more other such documents, such combination being obvious to a person skilled in the art
"&" document member of the same patent family

Date of the actual completion of the international search	Date of mailing of the international search report
03 September 2024 (03.09.2024)	**19 September 2024 (19.09.2024)**

Name and mailing address of the ISA/US	Authorized officer
Mail Stop PCT, Attn: ISA/US **Commissioner for Patents** **P.O. Box 1450, Alexandria, VA 22313-1450**	**MATOS** **TAINA**
Facsimile No. **571-273-8300**	Telephone No. **571-272-4300**