United States Patent [19]

McBride

[11] **3,900,023**

[45] **Aug. 19, 1975**

[54] **SUPPORT AND EXCITER DEVICE**

[76] Inventor: **Ralph J. McBride,** 6002 Marinette, Apt. No. 913, Houston, Tex. 77036

[22] Filed: **Nov. 1, 1974**

[21] Appl. No.: **519,815**

[52] **U.S. Cl.** **128/36;** 128/79

[51] **Int. Cl.**[2] **A61H 1/00;** A61F 5/00

[58] **Field of Search** 128/32, 34–36, 128/41, 26, 44, 79

[56] **References Cited**

UNITED STATES PATENTS

853,410	5/1907	Huebner	128/79
867,340	10/1907	Barrie	128/79
3,149,629	9/1964	Katz	128/44
3,626,931	12/1971	Bysakh	128/79

Primary Examiner—Lawrence W. Trapp

Attorney, Agent, or Firm—Robert W. B. Dickerson

[57] **ABSTRACT**

A device for providing a vibratory action to a penis support rod said support also including a guide member and a flexible elastomeric band.

4 Claims, 2 Drawing Figures

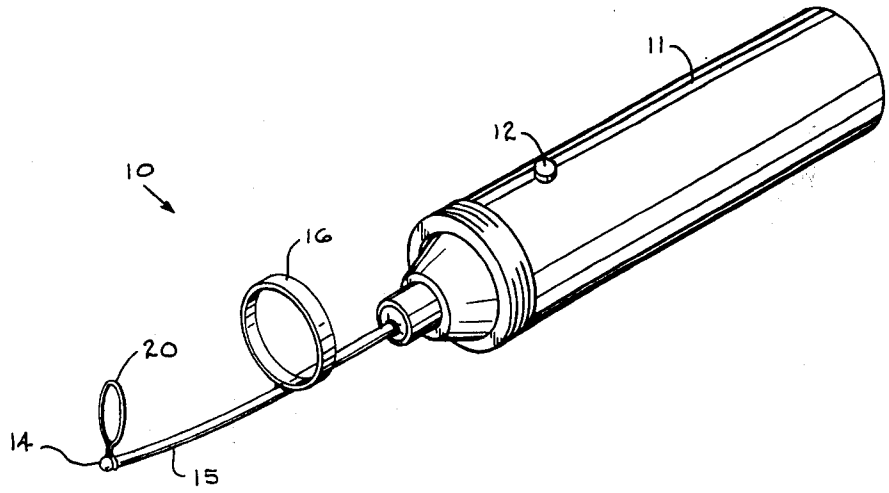

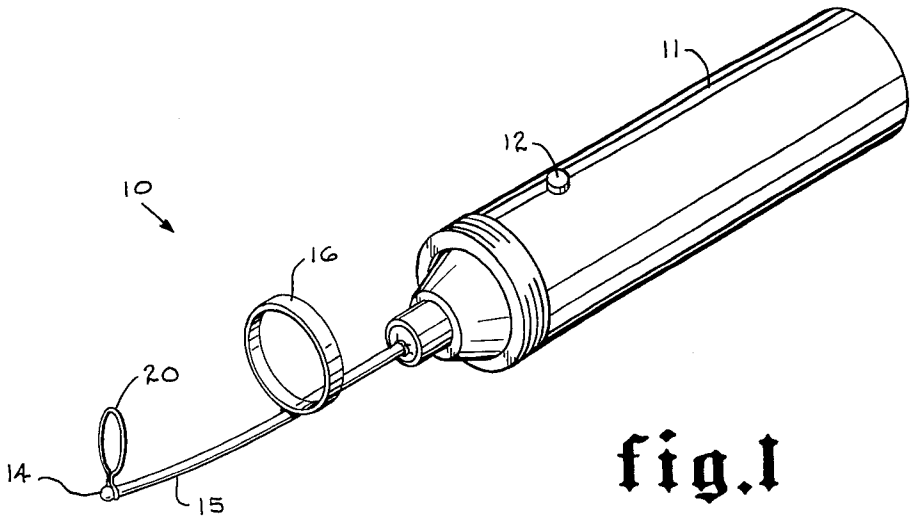

fig.1

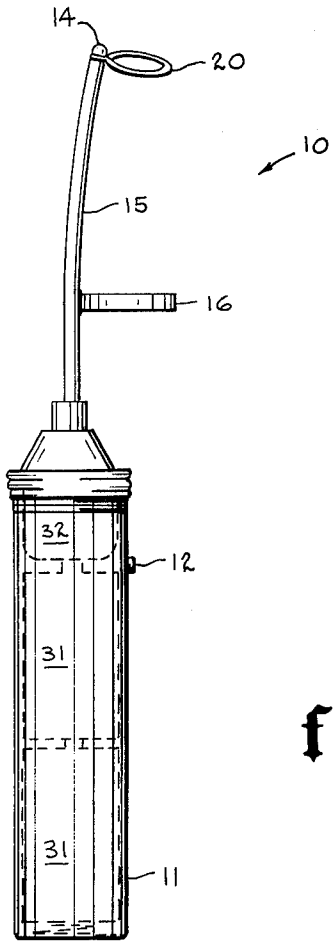

fig.2

SUPPORT AND EXCITER DEVICE

BACKGROUND OF THE INVENTION

There is a substantial number of males suffering from a disability commonly described as impotence. Such disability may be caused by purely physical problems, such as illness or muscular atrophy resulting from advanced age, or by physchologically related difficulties, or by combination of the two. Regardless of the cause, the numbers affected are large, estimated to excede 4,000,000 in this country alone, and the effect is traumatic, namely the inability to achieve an erection. Numerous devices have obviously been developed in the past for providing stimulation to a sexual organ. Some such developments have been more pornographically than medically oriented. Some examples of patented devices, resulting from a search are U.S. Pat. Nos. 3,504,665; 3,149,629; 3,633,572; and 818,618. However, such prior developments have failed, either by intent or otherwise, to satisfy the needs of potential users, especially those suffering from the debilitating effects of advanced age. It was to provide an assist to such a group that this applicant, himself a senior citizen, directed his invention.

SUMMARY OF THE INVENTION

A handle member includes means therein to impart vibratory action to an attached support rod. Intermediate the ends of such rod, a guide loop is attached thereto. At one end of such rod, a flexible band is affixed thereto, for circlingly engaging a penis head.

BRIEF DESCRIPTION OF THE DRAWINGS

FIG. **1** is a perspective of the device, and

FIG. **2** is a plan view thereof.

DESCRIPTION OF A PREFERRED EMBODIMENT

Looking at the drawings, the combination support and exciter device of this invention is identified generally by the numeral **10.** A combination hand-grip and vibrator-containing cylinder is indicated at **11.** This latter member contains therein a means for imparting a vibratory action to member **11,** and to members associated therewith. The particular vibration imparting means is inconsequential, there being numerous such systems available, such as rotating eccentric or unbalanced shafts or flywheels. An on-off switch is illustrated at **12,** which may provide a necessary electrical connection to allow batteries **31** within cylinder **11** to come in contact with and actuate a small electric motor **32,** which in turn would effect the necessary vibration.

Extending from one end of cylinder **11,** is rod **15.** Such rod may have a slight curvature thereto. The functional purpose of such rod is two-fold. First, it obviously vibrates during use, and thereby imparts vibration to related appendages. Second, it also serves as a penis support for a user. Intermediate the end of rod **15** positioned within or fixed to cylinder **11,** and its other end **14,** a loop **16** is fixed to said rod. The plane of said loop would be approximately normal to the axis of the rod. The loop may be a separate toroidal member linked, as by welding, to rod **15,** or the rod may be bent through **360°,** so as to form its own loop.

At or near end **14** of rod **15,** a flexible elastic band **20,** such as a rubber band, is fixed to such rod. The particular means for so affixing is not critical, but may be of a type so as to allow replacement in the event of damage to such band.

The intended mode of use is believed to be apparent. A user's penis would be inserted through loop **16,** with the head extending approximately to band **20,** with the penis shaft resting upon and being supported by rod **15.** Prior to imparting vibration, by operating switch **12,** flexible band **20** would be manipulated so as to encirclingly engage the penis head. On activating the switch, (1) the rod would both vibrate and support the shaft portion, (2) said shaft portion would be guided and restrained by loop 16, and (3) band **20** would yieldingly restrain the head portion while imparting vibratory motion thereto.

Although only a single embodiment has been described, it should be obvious that a certain number of modifications would be possible by one skilled in the art without departing from the spirit of the invention, the scope of which is intended to be limited only by the following claims.

I claim:

1. In a device for imparting vibratory motion to an organ of a user, the combination of:

a combination hand grip portion and source of vibrations;

a support member affixed to and extending outward of said housing;

a flexible member linked to said support member near said members end opposite from said housing; and

guide means provided said support member intermediate said housing and said flexible members end, said flexible member and said guide means forming means for holding portions of the organ to the support member.

2. The device of claim **1** wherein said flexible member is an elastic band.

3. The device of claim **2** wherein said guide means is a loop.

4. The device of claim **1** wherein said guide means is a loop.

* * * * *