Dec. 10, 1957 E. C. KIEKHAEFER 2,815,742

AIR INTAKE SILENCER CHAMBER

Filed Sept. 13, 1954

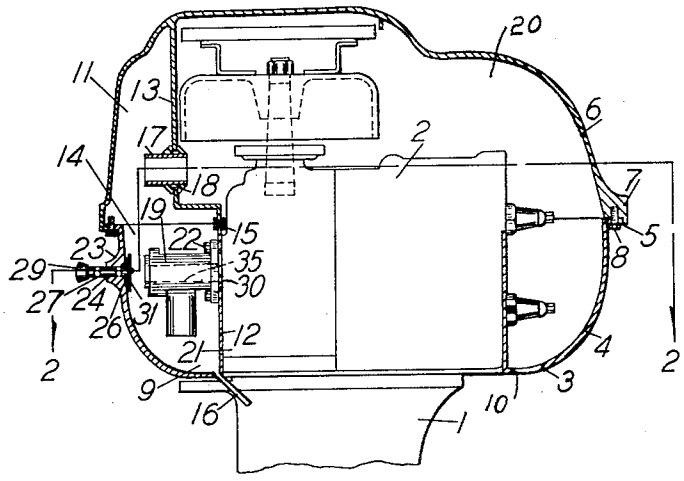

FIG. 1.

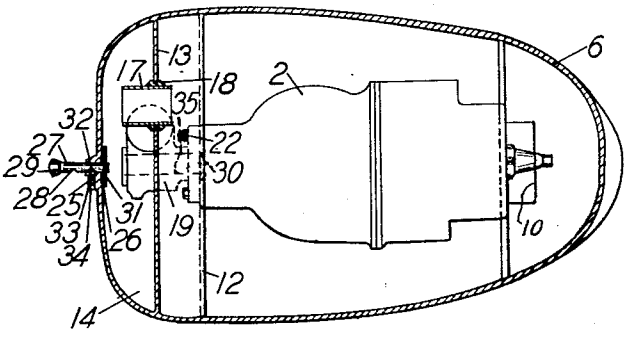

FIG. 2.

INVENTOR
ELMER C. KIEKHAEFER
BY Steve W. Grembau
ATTORNEY

United States Patent Office 2,815,742 Patented Dec. 10, 1957

2,815,742

AIR INTAKE SILENCER CHAMBER

Elmer C. Kiekhaefer, Cedarburg, Wis.

Application September 13, 1954, Serial No. 455,720

3 Claims. (Cl. 123—198)

This invention relates generally to a noise silencer or muffler, and more specifically to an air inlet silencer that completely encases the carburetor of an internal combustion engine.

In the internal combustion engine, a mixture of fuel and air is drawn into the piston cylinders through an intake valve that is alternately opened and closed. The sudden opening and closing of the intake valve coupled with the moving stream of fuel and air impinging against the valve in the closed position, and the throttling of the fuel-air mixture as it is drawn through the carburetor are actions resulting in the production of noise. Since the valve alternately opens and closes at a rapid rate, as often as one hundred times per second, the noise produced by the foregoing actions is of considerable magnitude. Also there is the danger of a mixture of gas and air accumulating within the cowl as a result of blow back and gas leakage out of the carburetor, particularly where an outboard motor is built with a substantially air tight cowl. This mixture of gas and air if correctly proportioned will explode when ignited by a spark from the magneto resulting in damage to the outboard motor. Applicant's invention resides in a carburetor air inlet silencer preferably constructed integrally with the cowl of an outboard motor and completely encasing the carburetor for minimizing the production of noise resulting therefrom, and the possibility of an explosion within the cowl.

It is therefore an object of the present invention to provide an air inlet silencer for an internal combustion engine to minimize the noise produced therein.

Another object of the invention is to provide an air inlet silencer for an internal combustion engine that is more economical, requires fewer parts of less complicated shape, and is easier to assemble than prior known silencers.

Another object of the invention is to provide an air inlet silencer for an internal combustion engine encased within a cowl that effectively reduces the length of said cowl thereby resulting in a less bulky unit.

Another object of the invention is to provide an air inlet silencer for an internal combustion engine encased within a cowl that serves to support said cowl.

Another object of the invention is to provide an air inlet silencer for an internal combustion engine encased within a cowl that isolates the carburetor from the ignition system of said engine.

Another object of the invention is to provide an air inlet silencer for an internal combustion engine encased within a cowl that minimizes the explosive and fire hazard resulting from the accumulation of gas within the cowl.

Objects and advantages other than those set forth above will be apparent from the following description when read in connection with the accompanying drawing, in which:

Fig. 1 is an elevation view in section of a part of an outboard motor embodying the invention; and

Fig. 2 is a section view taken along line 2—2 of Fig. 1.

As shown in Figures 1 and 2 of the drawings, a preferred embodiment of this invention is illustrated as applied to an internal combustion engine shown as a power head 2 encased within a cowl 3 as embodied in an outboard motor, only a part of which is shown, having a segmental drive shaft housing 1 upon which the power head 2 is mounted. The cowl 3 has a lower part 4 in the form of a generally upwardly dished member mounted between the drive shaft housing 1 and the power head 2. The lower part 4 is provided with an annular flange 5 along the upper edge thereof and an opening 10 at the bottom thereof to provide an air inlet means into the cowl 3. An upper part 6 of the cowl 3 forms a cover for the power head 2 and is also provided with an annular flange 7 along the lower edge thereof registering with the annular flange 5 of the lower part 4 and mating therewith to enclose and protect the power head 2. The lower part 4 is securely fastened to the upper part 6 by means of studs 8.

The lower and upper parts 4, 6 of the cowl 3 are shown as having lower and upper pockets 9, 11 which are respectively formed by plate members 12, 13 of generally semi-circular cross section corresponding to the shape of the lower and upper parts 4, 6 and shown as being integrally formed therewith as by casting, welding, or other suitable means. Although the plate members 12, 13 are shown as being integrally formed with the cowl 3, it is to be understood that applicant is not limiting his invention to that particular construction since the invention is equally applicable with the plate members 12, 13 as separate units positioned within the cowl 3.

The lower and upper pockets 9, 11 are so positioned that when the upper part 6 is joined to the lower part 4, the pockets 9, 11 together define a silencer chamber 14. A seal, shown as an H-shaped grommet 15, is provided between plate members 12 and 13 to seal the junction thereof. The lower pocket 9 further is provided with a conduit 16 extending outwardly from the lowermost point of the pocket to convey liquids, such as gas that accumulates in the pocket as a result of drippings and blow back from the carburetor, out of the pocket 9.

The chamber 14 is further provided with at least one tubular member 17 having a predetermined length which is a function of the volume of the chamber 14, and which may be readily calculated by mathematical formulas which are well known in muffler design calculations to provide a silencing chamber having optimum muffling characteristics. The tubular member 17 is preferably shown fastened to the upper plate member 13 of the chamber 14 by means of an annular U-shaped seal 18 positioned around the periphery of the tubular member 17 and mating with a corresponding opening in the plate member 13. The member 17 may preferably be inclined upwardly so that the liquid gas and gas vapor emitted from a carburetor 19 and settling to the bottom of the chamber 14 cannot easily escape through member 17 into the cowl 3. Although the member 17 is shown mounted on plate member 13, it could be mounted on the portion of the cowl 3 forming the chamber 14 wherein chamber 14 would be completely isolated from the chamber 20 within which the power head 2 is encased. The plate members 12 and 13 form a wall or partition that is common to chamber 14 and 20 within cowl 3.

The lower plate member 12 of the lower pocket 9 is shown as clamped between a crankcase 21 and the carburetor 19 with the carburetor 19 positioned within the silencer chamber 14 and mounted to the lower plate member 12 and crankcase 21 by means of bolts 22 passing through aligned openings, not shown, in the base of the carburetor 19, lower plate member 12 and crankcase 21. The lower plate member 12 is provided

with an opening 30, shown dotted, in alignment with carburetor portion 35 enclosing the fuel air mixture passage, not shown, of carburetor 19 to permit entry of a fuel air mixture to the cylinders, not shown, of the power head 2. Positioning the carburetor 19 within the chamber 14 results in effective isolation of the gas-air mixture accumulating within chamber 14 from the ignition or magneto system of the power head 2 thereby more completely minimizing the possibility of an explosion within the cowl 3, particularly where the cowl is substantially air tight. Any highly explosive gas-air mixture formed within silencer chamber 14 is effectively prevented from passing through tubular member 17 into chamber 20 or cavity within which power head 2 is encased by the difference in pressures existing in respective chambers 14, 20. The air flow in operation of power head 2 is from atmosphere into chamber 20 through opening 10 and thence through tubular member 17 into chamber 14 and into carburetor 19. The pressure of the air within chamber 20 is less than atmospheric due to the pressure drop developed across opening 10. Also, the pressure within chamber 14 is less than the pressure within chamber 20 due to the pressure drop occurring across tubular member 17. Therefore, any explosive gas-air mixture accumulating within chamber 14 tends to be confined therein and is effectively electrically isolated from the ignition system of power head 2, that is, confined in an area apart or removed from electrical sparks developed by the ignition system. The gas-air mixture that escapes from chamber 14 into chamber 20 is of such negligible quantity with respect to the volume of chamber 20 that an explosive mixture of any consequence cannot possibly form therein.

The lower part 4 of the cowl 3 forming a portion of the chamber 14 is provided with a boss 23 having a bore 24 therethrough and an elongated opening 25 transverse to the bore 24 and connected thereto. A resilient seal means shown as a rubber washer 26 is mounted on the face of the boss 23 by any suitable means such as bonding. A choke member comprising a rod 27 is slidably insertable in the bore 24 and is provided with notches 28. A knob 29 is secured on the end of rod 27 extending outwardly of cowl 3 and a disk 31 is secured on at the opposite end of the rod within chamber 14 of the cowl. A spherical ball 32 and resilient means, such as a spring 33, is interposed in the opening 25 and retained therein by means of a set screw 34. The spring 33 and ball 32 coact with the notches 28 in the rod 27 to maintain the choke in either a choking or non-choking position. In the non-choking position as shown in the drawing, the disk 31 seats against the resilient seal means 26 of the boss 23 to seal the opening 25 to prevent air leakage therethrough.

Although but one embodiment has been illustrated and described, it will be apparent to those skilled in the art that various changes and modifications of the invention may be made without departing from the spirit of the invention or from the scope of the appended claims.

It is claimed and desired to secure by Letters Patent:

1. In an internal combustion engine having an electrical ignition system and a carburetor and being encased within a cowl, the combination of: a pair of adjacent chambers formed by a common impervious wall disposed within said cowl, one of said chambers completely encasing said carburetor to form an air intake silencer chamber and providing the source of air for carburetion, the other of said chambers completely encasing said engine and electrical system, and an air inlet opening connecting said chambers whereby air in the silencer chamber consumed by carburetion is replenished by air from the outer chamber.

2. The combination as set forth in claim 1 wherein said air inlet opening comprises a tubular member carried by said common wall.

3. In an internal combustion engine having an electrical ignition system and a carburetor and being encased within first and second cowl members, the combination of: a first plate member cooperating with said first cowl member to define first adjacent pockets; a second plate member interposed between said carburetor and said engine and having an opening in register with the air inlet passage of said carburetor, said second member cooperating with said second cowl member to define second adjacent pockets in register with said first adjacent pockets to form a first chamber completely encasing said carburetor and an adjacent second chamber completely encasing said engine and electrical ignition system; a tubular member carried by one of said plate members to provide gaseous communication between said first and second chambers, the air pressure within said first chamber being less than the air pressure within said second chamber due to the pressure drop developed across said tubular member whereby any explosive gas-air mixture accumulating within said first chamber is confined therein to effectively electrically isolate said gas-air mixture from said electrical ignition system of said engine.

References Cited in the file of this patent

UNITED STATES PATENTS

1,761,221	Marx	June 3, 1930
2,103,902	Heintz	Dec. 28, 1937
2,256,831	Karey	Sept. 23, 1941
2,355,103	Otto et al.	Aug. 8, 1944
2,423,181	Emery	July 1, 1947
2,533,195	Metzger	Dec. 5, 1950