Dec. 3, 1968 W. T. FISHER ET AL 3,413,917

ELECTROSTATIC PRINTING WITH MEANS TO CHANGE POLARITY OF COUNTER ELECTRODE

Filed Nov. 16 1966

FIG. 1.

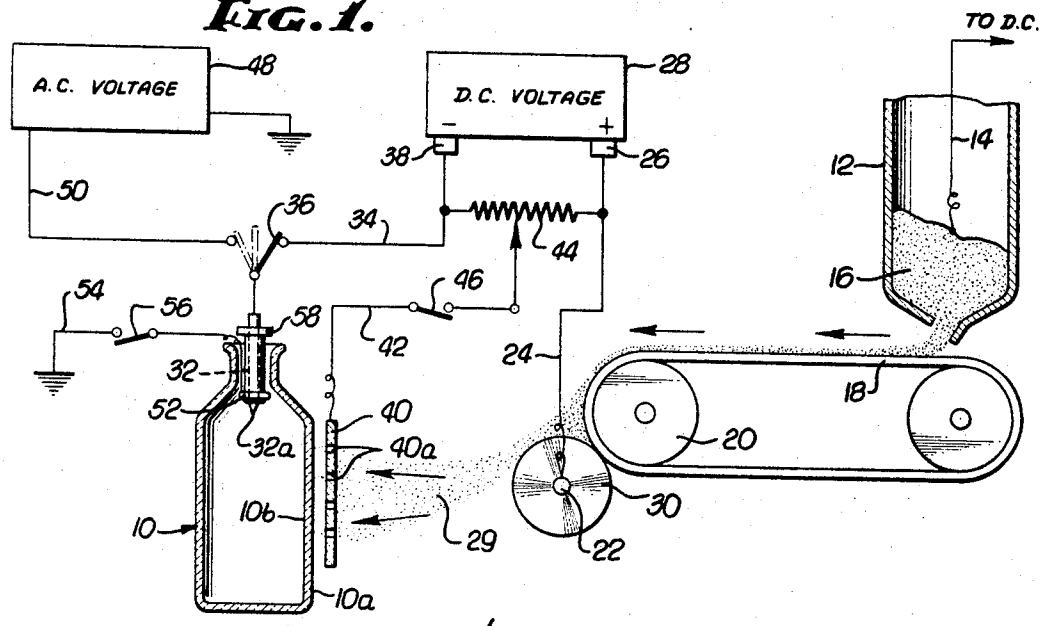


FIG. 3.

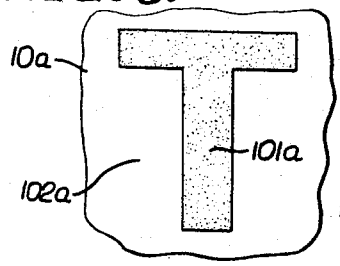


FIG. 4.

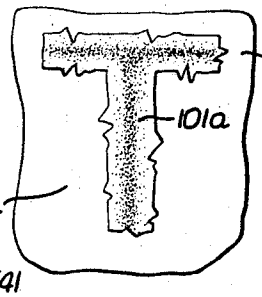


FIG. 2.

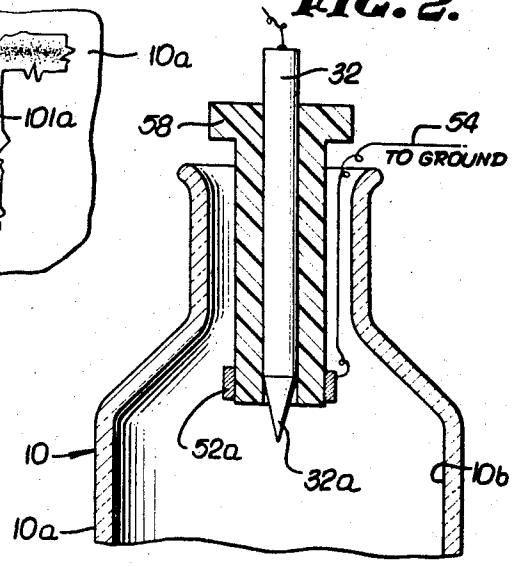


FIG. 5.

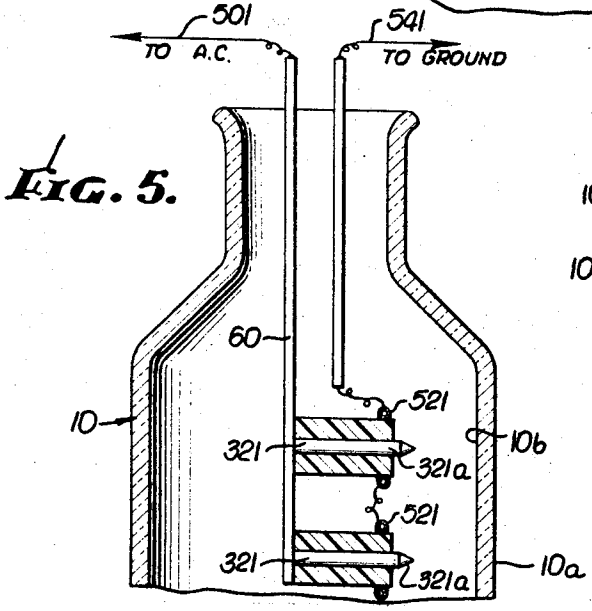


INVENTORS.
WILLIAM T. FISHER
CHARLES B. PATTERSON
STANLEY M. DAHL
By White & Haefliger
ATTORNEYS.

United States Patent Office 3,413,917
Patented Dec. 3, 1968



3,413,917

# ELECTROSTATIC PRINTING WITH MEANS TO CHANGE POLARITY OF COUNTER ELECTRODE

William T. Fisher, Los Alamitos, Charles B. Patterson, Lakewood, and Stanley M. Dahl, Whittier, Calif., assignors to Purex Corporation, Ltd., Lakewood, Calif., a corporation of California

Filed Nov. 16, 1966, Ser. No. 594,820
12 Claims. (Cl. 101—114)

## ABSTRACT OF THE DISCLOSURE

Electrically charged particles, deposited on an object in a predetermined pattern through an electrical field, have a tendency to migrate from their points of impingement, due to electrical potential conditions created during printing. This invention alleviates charge imbalances and other conditions which cause migration, generally by application of reversing charges to the areas of the object affecting print stability.

This invention relates to improved methods and apparatus for printing, decorating or to like purposes depositing printing particles such as fine electroscopic pigment by electrostatic means on essentially nonconductive surfaces of planar as well as curvilinear configuration, and is applicable to the direct labeling or decoration of flat sheet or containers and other objects of irregular or intricate shape made from plastic, glass, metal or other materials which have or are provided with essentially nonconductive surfaces. More particularly, the invention is concerned with achieving sharper printing images and more stable patterns of electrostatically deposited pigment on such objects by alteration of post-printing conditions of electrical potential so that migration of deposited particles, destructive of character outline, print uniformity and logo legibility is minimized.

Electroscopic toner particles, either solid or liquid, may be printed on a target surface by passage of the massed particles through a stencil screen which is positioned opposite and in closely spaced relation to the target surface. An electrostatic field is maintained between the target and a spaced voltage source within which the stencil is positioned so that electrically charged printing particles within the field are induced to move through unmasked areas of the stencil corresponding to the subject matter to be printed, and to project onto the target surface.

Creation of the required electrostatic field is effected by the application of voltage differential between what may be termed a launching electrode integral with or spaced from the stencil and at which electrically charged particles, e.g., of pigment are launched into the field for passage to the target object, and counter-electrode means so associated with the target surface that the stencil-passing particles are caused to deposit thereon. Such counter-electrode means may have any of various particular forms, such as the target surface backing itself where conductive, or a separate electrode, in effect backing the target. In container printing, a counter-electrode inserted in the container, or projected only partially thereinto so as to ionize fluid within the container creates an effective counter-electrode condition.

A major problem with electrostatic printing is migration of deposited pigment following printing. In practice, following deposition of the printing particles, the field generating voltage is shut off and/or the stencil and object are moved apart, e.g., to enable printing of additional objects. Immediately during conveying from the printing station, or subsequently during storage, the particles deposited by most electrostatic printing processes are instable in their positions and creep outwardly in a random manner. The effect is a variable density within a printed letter or logo and irregularly broken edges on the characters so that the general appearance is one of unevenness and in extreme cases, illegibility.



The present invention is predicated on the major concept, among others, of reducing the electrical forces acting on deposited particles as a result of an electrostatic printing process and, more specifically, reducing the potential between image and nonimage areas resultant from the printing operation. It has been found that upon flow of printing particles through the stencil and onto the object under an electrostatic potential, a concentration of charges in the image areas obtains relative to the nonimage areas and the resultant disparity of charge concentration, particularly in relation to the overall more uniformly distributed opposite charge on the counter-electrode side of the object, produces a nonuniform field or potential which tends to cause image particle migration, and altering this field or potential, following printing, results in stable patterns of particle distribution, apparently by removing the migration inducing potential gradient existing between image and nonimage printing areas.

Thus, the present invention provides a method of printing upon the surface of an electrically nonconductive material such as a polyethylene bottle, that includes depositing electrically charged printing particles such as electroscopic pigment upon the surface to form a printed image area having adjacent nonprinted areas and in so doing creating electrical potential between the image and nonimage areas tending to cause migration of said particles from the image area, and immediately upon the image deposition altering this potential to prevent image particle migration, generally by reducing the potential as by increasing the charge on the nonimage areas, decreasing the charge on the image areas or reducing toward neutrality the electrical potential generating charges adjacent the image areas.

The most significant source of electrical potential generating charges is the printing-particle-attracting electrical counter-electrode condition maintained behind the to-be-printed surface during printing which leaves a charge on the reverse side of the printed surface when the counter-electrode voltage is shut off following printing, particularly where such voltage is applied in a closed space such as a container interior. Particle migration is inhibited, it has been found, when the charge constituting this counter-electrode condition is dissipated as by applying a reversing charge, particularly within the closed space. The effectiveness of reverse charge application in dissipation of unwanted charge is increased by providing a potential between the reversing charge and a spaced point such as the exterior of the closed space and adjacent the image area. Thus for example, if the unwanted charge is attributable to a negative charge on the interior of a closed space such as a container, a positive reversing charge is applied to the container interior, ionizing the ambient medium. For further effectiveness a negative charge condition is created without the container to expedite neutralization of the negative charge within the container by increasing electrical interaction between the supplied positive and present negative charges. The stencil is useful as a locus for charges used to provide a potential with respect to the reversing charge since it is usually closely adjacent to the image area where redressing potential creating charge imbalances is most important. The reversing charge application is preferably accomplished by the use of an A.C. voltage which is capable of reducing toward neutrality the residue charge condition of the reverse face of the printed surface, but

an opposite polarity D.C. voltage can also be used. The charge application, if any, to the stencil or other spaced point to enhance neutralization is generally D.C. and of opposite polarity to the reversing charge if the latter is D.C. An A.C. voltage can be applied to the stencil but this may disturb the printed particles. Uniformity of result in removing charges is enhanced by applying the reversing charges from a plurality of points within said container preferably distributed generally opposite the image areas.

Apparatus is provided for carrying out the above method of printing on an essentially nonconductive surface including printing means for depositing electrically charged particles on such surface to form a printed image area in a manner creating electrical potential between the image and nonimage areas tending to cause migration of the printing particle from the image area and means for altering this potential to prevent image particle migration including a voltage source. More specifically, the apparatus includes means for positioning the object to be printed such as a container at a printing station, a printing particle supply, launching electrode means spaced from the object surface adapted to launch electrically charged printed particles theretoward at the printing station and counter-electrode means operative to generate an electrostatic field between the electrode means, an apertured stencil within the field to define image and nonimage areas; and potential altering means including a charging electrode means connected to a voltage supply source.

In the printing of containers, the counter-electrode means will generally be a conductor shaped to be receivable within the container and preferably provided with a pointed terminus which is connected for alternately receiving a D.C. voltage during printing and a reversing charge producing D.C. or A.C. voltage following printing. To increase field strengths adjacent the counter-electrode a differently charged electrode may be provided spaced a small distance therefrom, e.g., a ring circumferentially spaced adjacent and rearwardly of the counter-electrode terminus for electrical connection to an appropriate potential when a charge reducing, e.g., an A.C., voltage, is imposed on the counter-electrode. Where the printed area is large and distributed over the object, the counter-electrode may include a plurality of terminals distributed generally opposite the image areas on the object.

The invention will be further described as to one illustrative embodiment thereof in conjunction with the attached drawings in which:

FIG. 1 is a view diagrammatically illustrating the invention as applied to improved printing on a container formed of dielectric material.

FIG. 2 is an enlarged detail view, generally in section, of the combined counter and reversing charge producing electrode.

FIGS. 3 and 4 are fragmentary views illustrating diagrammatically the effect on printed images of employing the present invention.

FIG. 5 is a view generally in section, showing an alternative arrangement of charge reversing electrodes within a container.

Referring, now, to the drawings in detail there is shown in FIG. 1 a typical improved printing apparatus according to the present invention, particularly adapted to print or decorate an open-mouth container **10** having a printable surface **10***a* which can be assumed to be dielectric, e.g., of glass or of synthetic organic plastic material such as polyethylene or polyvinyl chloride or to be paper or a plastic/metal or paper/metal combination. Printing means for depositing electrically charged particles upon the container surface are shown including a printing particle supply comprising a hopper **12** having within a charging wire **14** connected to, e.g., a positive D.C. source (not shown) for charging printing particles **16**, conveyor belt **18**, suitably of rubber or mohair, and driven continuously beneath the hopper outlet between sheaves **20**. Printing particles **16**, electrically charged within the hopper, fall by gravity onto the belt **18** and are carried to the launching area. There launching electrode **22** is provided connected at **24** to, illustratively, the positive terminal **26** of a D.C. voltage supply **28** so that the particles **16** are repelled by the electrode **22** and thus launched as a stream **29**. A brush **30** rotating about electrode **22** may be used to assist in separating charged particles from the belt. A counter-electrode means is provided to define an electrostatic field with electrode **22** including conductive probe **32** positioned within container **10** at the open mouth or neck thereof. The probe is connected at **34** through switch **36** to, illustratively, the negative terminal **38** of the D.C. voltage supply **28** so that the particles of stream **29** are attracted to the counter-electrode and surface **10***a*. Within the field thus defined there is placed a printing pattern defining stencil **40** of conductive or dielectric material, and preferably of brass or beryllium-copper shim stock, which may be electrically connected at **42** to potentiometer **44** through switch **46** for purposes as will appear.

The stencil is provided with image defining apertures **40***a* which permit portions of printing particle stream **28** to pass the stencil and impinge on the container surface.

The stencil apertures may be produced mechanically as by blanking out with a suitable die in a punch press, or chemically or electrochemically, by etching away unmasked areas of the sheet, or by other suitable means.

It will be appreciated that the foregoing specific arrangement and function of components can be varied and use still made of the present invention. Thus, for example, the stencil can function as the launching electrode as well as a pattern determinator or the stencil can be placed against the container surface. In general, any printing system in which printing particles are moved through an electrical field to be placed on a surface in a stencil controlled pattern can be improved in resultant print appearance by the present invention.

Assuming an arrangement as shown in FIG. 1 the electrostatic field will generally have a quite high potential, e.g., on the order of 20,000 to 100,000 volts or more. This is provided by application of a voltage differential to the electrodes in a known manner and typically by application of 40,000 to 60,000 volts to the launching electrode and 10,000 to 20,000 volts of opposite polarity to the probe of the counter-electrode. The stencil is generally grounded or unconnected as shown in FIG. 1, but may be given a potential level intermediate the electrode voltage values, e.g., by closing switch **46**.

For illustrative purposes, the launcher will be considered as positively charged and the probe therefore negatively charged. The particles then will be positively charged. It is to be noted that it is the relationship of polarities of the electrodes to one another and to the particles that is of significance and not their sign. So while the illustrative apparatus is described herein with a positively charged launching electrode and a negatively charged counter electrode and employing positively charged particles, results would be identical if all charges were reversed. The screen will be nominally neutral or may be charged to a value between the electrode values.

Under the strong field conditions just described there occurs a phenomenon known as free charge flow from the launching electrode to the stencil even in the absence of electrical connection therebetween or even printing particle flow. Of course, during printing there is an accumulation of positive charges on the stencil to an appreciable extent.

At the same time negative charge free flow is occurring within the container **10** from negatively charged counter-electrode probe **32**. This results in an accumulation of negative charges on the interior surface **10***b* of the container.

During printing, impingement of the particle stream

29 on the container surface **10***a* loads this surface selectively with positive charges in the image areas because of the concentration there of the positive charge bearing particles. Adjacent nonimage areas have no charge or a relatively quite slight positive charge. A potential is thus created between image and nonimage areas owing to the unequal distribution of charges across this surface.

Since the interior of the container bears a highly uniform negative charge from free charge flow from the counter-electrode probe, it is apparent that these negative charges will be unequally balanced across the container surface with a better balance at the positive charge rich image areas than at relatively positive charge poor nonimage areas. Lines of force are seen then to exist between the image and nonimage areas. The particles still carrying positive charges attempt to distribute themselves across the surface **10***a* so as to equalize the charge condition on that surface and more nearly balance the negative charge residing on the reverse side **10***b* of the container wall. The disparity of potential between the image areas and the counter charges and the non-image areas and the counter charges induces a charge equalizing movement of the particles. Naturally this movement is most noticeable at the peripheral portions of the printing. In FIG. 3 a section of surface **10***a* is shown with image area **101***a* and nonimage area **102***a* at the instant of completion of printing particle deposition and field shut down. In FIG. 4 this section is shown several minutes later. The migration of printing particles is clearly shown in FIG. 4 to be disruptive of letter outline and to vary print density. Where multiple small letters are printed such outline breaking reduces legibility of the wording and produces a useless print.

Removal of the mask can intensify particle migration. As pointed out above, positive charges accumulate on the mask from free charge flow and particles colliding therewith. The resultant accumulated positive charge to some extent balances negative accumulated charges behind the printed surface. When the mask is removed, the field lines move rapidly through the printed image and dislocate the particles, aggravating the stability problem.

Referring to FIGS. 1 and 2, apparatus is provided for minimizing printed particle stability problems developed naturally from electrostatic printing procedures, specifically means for altering the electrical potential created between image and nonimage areas to prevent image particle migration including a voltage source. As shown, an A.C. voltage source **48** is provided to which an electrode, here probe **32** is connected at **50** through switch **36**. Closing switch **36** to the left introduces interiorly of container **10** an A.C. voltage, e.g. at 1,000 to 20,000 volts and preferably at 3,000 to 7,000 volts; in general, to act as a reversing charge to reduce the charge on the container interior surface **10***b* but less than that which would relaunch the particles deposited on the outside of the container. A reduction of interior charges to neutrality is not required, only reversal toward neutrality but neutralization may be carried out. For the conditions of printing given above a 5,000 volt A.C. charge to the container interior for from 1 to 10 seconds, preferably 3 to 7 seconds reverses the interior charge condition sufficiently toward neutrality to alleviate particle migration and enable retention of image area integrity. While an A.C. voltage application is illustrated, an opposite polarity D.C. charge including a pulsing D.C. voltage may be used with effectiveness at levels below those relaunching the deposited particles.

In container applications, as illustrated, it is of assistance to maximize field strength from the voltage applied, i.e. to a medium ionizing level so as to most efficiently reverse extant charge conditions. For this purpose an electrode ring, e.g. in the form of conductive tubing **52** (FIG. 1) connected at **54** through switch **56** to an appropriate potential, illustratively ground and rearwardly adjacent the terminus **32***a* of the electrode probe and spaced therefrom, for example by nonconductive annulus **58**, may be employed. The ring can also be a metal sleeve or cylinder section, as illustrated at **52***a* in FIG. 2. The charge applied to the electrode ring is such as will produce a field with the charge on the counter-electrode, e.g. a lower potential or ground. Generally either ground or a potential intermediate those on the counter-electrode and the exteriorly provided potential will be used.

Where image areas are distributed over the object surface it may prove desirable to apply reversing charges from a plurality of terminals. This is illustrated in FIG. 5 where a pair of electrodes **321** supported on rod **60** and having terminus **321***a* and associated field intensifying electrode rings **521** are connected in the manner of the FIGS. 1 and 2 reversing electrode to A.C. voltage at **501** and to ground at **541**.

In the illustrated embodiments herein, the counter-electrode and reversing electrodes are shown to be one and the same. This has proved to be a practical expedient in practice as well as being convenient in illustrating the invention. Switch **36** is capable of three positions: extreme right, for connection of the probe **32** to negative D.C.; extreme left, for connection of the probe to A.C.; and center, for no connection. Similar connections may be employed with the probes **321** depicted in FIG. 5, but are not shown in the interests of simplicity.

A further assist in rapid reduction of potential is realized by creating a reversing charge attracting condition exteriorly of the container. Thus, application of a negative charge reversing positive voltage within the container is heightened in charge neutralizing effectiveness by creating a charge condition which attracts the neutralizing positive charges to the negatively charged area. Conveniently in stencil printing, advantage may be taken of the proximity of the stencil to the image area, to apply a charge to the stencil which attracts the reversing charge applied within the container. For instance, assuming a launching electrode at +50,000 volts and a negative counter-electrode at −15,000 volts, and application following printing of 5,000 volts A.C. to the counter-electrode probe for about 5 seconds, more complete dissipation of the image area-nonimage area potential is realized if during the A.C. application there exists a negative charge on the stencil. This negative should be on the stencil during internal charge reduction within the container. It is not necessary that the opposite polarity charge be applied to the stencil simultaneously with application of a charge reversing voltage to the container interior, for the opposing charge on the stencil will remain following its application to the stencil sufficiently to realize the benefits discussed above.

To summarize the operation of the invention, printing particles **16** are electrically charged, are launched in a stream **29** from like charged launching electrode **22**, pass through stencil **40** and impinge on selected areas of a target such as container **10** behind which a counter-electrode condition is maintained by a charge on probe **32** to create the particle moving field. The particles are deposited on surface **10***a* to form a printed image area **101***a* having adjacent nonprinted or nonimage areas **102***a*. The accumulation of charges in the image areas being great relative to the nonimage areas, an electrical potential exists therebetween and between the charges on the surfaces inside and outside of the container, which tends to cause migration of the deposited particles from the image area. This potential is altered by either reducing it as by increasing the charge on the nonimage areas, e.g. by contacting the nonimage areas **102***a* with a positively charged stencil **40**, or by decreasing the charge on the image areas, e.g. by freely flowing charge onto the image areas of opposite polarity; or by reducing static charges adjacent the nonimage areas which create electrical potential namely the unbalanced negative charges within the container. This last method may be carried

out by applying a reversing charge e.g. an A.C. voltage to the container interior, optionally with provision of a potential between the reversing charge and the container exterior. Conveniently, the stencil **40** can be used as the locus for the opposing charge. The reversing charge may be applied from a plurality of points within the container, distributed generally opposite the image area, but whether one or a plurality of points are employed, it is desirable to intensify the resulting field by maintaining differently charged electrode spaced from and adjacent the reversing electrode terminus to increase ionization of the ambient medium and thus hasten discharge of the unwanted charges in the area.

We claim:

**1.** Apparatus for printing on containers having an essentially nonconductive surface that includes printing means comprising a printing station for a container to be printed, a printing particle supply, launching electrode means spaced from the container surface adapted to launch electrically charged printing particles toward said container at said printing station, counter electrode means within said container charged to a first polarity to generate a counter-potential and establish an electrostatic field between said electrode means, and an apertured stencil within said field to define image and nonimage areas; and means including a voltage supply source for charging said counter-electrode to a second, opposite polarity to prevent image particle migration.

**2.** The method of printing on containers having an electrically nonconductive printable surface that includes positioning the container at a printing station, establishing a printing-particle-attracting counter-electrode condition within said container by charging an electrode within the container to a first polarity, depositing electrically oppositely charged printing particles upon said surface to form a printed image area and in so doing creating electrical potential between the image and nonimage areas tending to cause migration of said particles from the image area, and immediately upon the image deposition, charging said electrode to a second, opposite polarity thereby altering said potential to prevent image particle migration.

**3.** Method according to claim **2** including applying an A.C. voltage within said container.

**4.** The method of printing on containers having an electrically nonconductive printable surface that includes positioning the container at a printing station, establishing a printing-particle-attracting counter-electrode condition within the container by charging an electrode therein to a first polarity, depositing electrically oppositely charged printing particles upon said surface to form a printed image area and in so doing creating electrical potential between the image and nonimage areas tending to cause migration of said particles from the image area and immediately upon the image deposition altering said potential to prevent image particle migration by charging said electrode to a second, opposite polarity and also providing an additional potential relative to said opposite polarity charge on said electrode exteriorly of said container and adjacent said image area and establishing an ionizing potential in the medium immediately adjacent said electrode.

**5.** Method according to claim **4** including maintaining an electrostatic field extending from a spaced voltage source to said container, positioning an apertured stencil in said field and in spaced relation to said voltage source, and introducing said electrically charged particles into said field at a location spaced from the stencil so that said particles are launched into said field to pass through the stencil apertures to be deposited on the container surface to form a printed image and immediately following image deposition, terminating said electrostatic field, applying an opposite polarity charge to said stencil and thereafter applying an A.C. voltage within said container after termination of said electrostatic field.

**6.** Method according to claim **5** in which said A.C. voltage application is sufficient substantially to bring the container interior to a neutral charge condition.

**7.** Method according to claim **5** including providing a synthetic organic plastic surface to be printed upon.

**8.** Apparatus for printing that includes a printing station for a container to be printed having an essentially nonconductive surface, a printing particle supply, launching electrode means spaced from the container surface adapted to launch electrically charged printing particles toward said printing station, counter-electrode means operative to generate a counter-potential within said container to establish an electrostatic field between said electrode means, and an apertured stencil within said field to define image and nonimage areas; said counter-electrode means being connected to alternately provide D.C. and A.C. voltages within said container.

**9.** Apparatus according to claim **8** in which said counter-electrode means includes a plurality of terminals distributed generally opposite the image areas on the container.

**10.** Apparatus according to claim **8** in which an additional and differently charged electrode is provided adjacently spaced from the terminus of the counter-electrode means during application of an A.C. voltage to said means.

**11.** Apparatus according to claim **8** in which said stencil is connected to receive an electric charge.

**12.** Apparatus according to claim **11** including means sequentially to form said electrostatic field, and following printing, terminate said field, and immediately thereafter apply an opposite polarity charge to said stencil and thereafter apply a reversing charge within said container.

**References Cited**

UNITED STATES PATENTS

| | | |
|---|---|---|
| 2,894,139 | 7/1959 | Magruder et al. |
| 3,296,963 | 1/1967 | Rarey et al. |
| 3,306,193 | 2/1967 | Rarey et al. |

ROBERT E. PULFREY, *Primary Examiner.*

E. S. BURR, *Assistant Examiner.*