Aug. 17, 1926. 1,596,251

J. H. HAMMOND, JR

SECRET RADIANT TELEPHONY

Filed Dec. 2, 1922 2 Sheets-Sheet 1

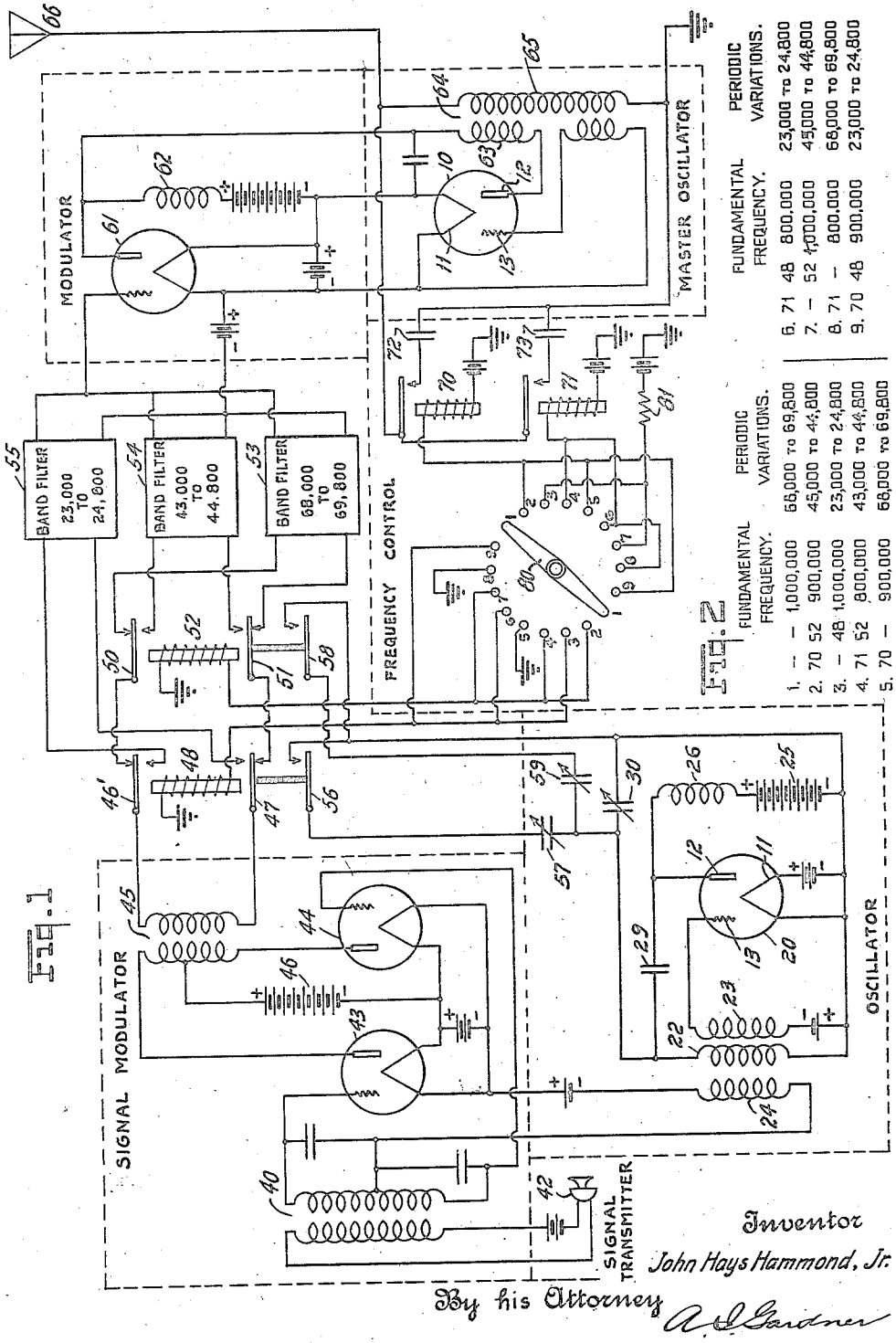

Fig. 1

	FUNDAMENTAL FREQUENCY.	PERIODIC VARIATIONS.
1.	— — 1,000,000	68,000 to 69,800
2.	70 52 900,000	45,000 to 44,800
3.	— 48 1,000,000	23,000 to 24,800
4.	71 52 800,000	43,000 to 44,800
5.	70 — 900,000	68,000 to 69,800
6.	71 48 800,000	23,000 to 24,800
7.	— 52 1,000,000	45,000 to 44,800
8.	71 — 800,000	68,000 to 69,800
9.	70 48 900,000	23,000 to 24,800

Fig. 2

Inventor
John Hays Hammond, Jr.
By his Attorney
A. D. Gardner

Aug. 17, 1926. 1,596,251

J. H. HAMMOND, JR

SECRET RADIANT TELEPHONY

Filed Dec. 2, 1922 2 Sheets-Sheet 2

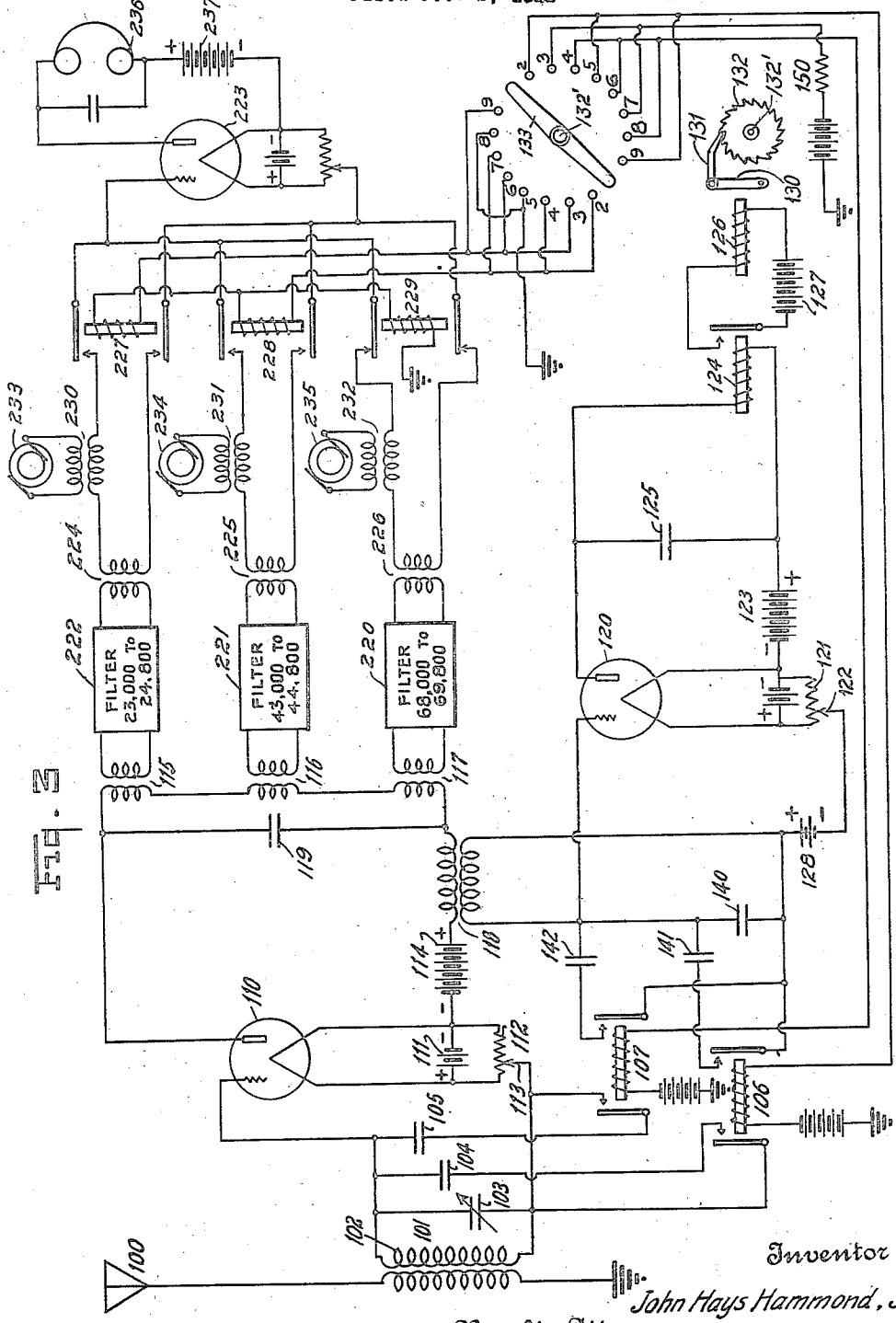

Fig. 2

Inventor

John Hays Hammond, Jr.

By his Attorney A. G. Gardner

Patented Aug. 17, 1926. 1,596,251

UNITED STATES PATENT OFFICE.

JOHN HAYS HAMMOND, JR., OF GLOUCESTER, MASSACHUSETTS.

SECRET RADIANT TELEPHONY.

Application filed December 2, 1922. Serial No. 604,623.

This invention relates to the transmission of intelligence by radiant energy and more particularly to systems of secret radiant telephony.

An object of the invention is to provide a system comprising a sending station arranged to emit radiant energy of varying character and a receiving station co-operating therewith and provided with apparatus responsive to the emitted energy despite the variations therein. More specifically, a further object of the invention is to provide improved means for the emission of radiant energy in the form of oscillations having a fundamental frequency, modulated at successively varying supersonic frequencies each made effective and modulated by desired signals, such for example as voice waves, and to arrange for the selective reception of such energy and its transformation into sensible manifestations.

Further objects of the invention will appear from the following description taken in connection with the accompanying drawings forming a part of this application and in which—

Figure 1 is a diagram of a sending station which is an embodiment of the present invention;

Figure 2 is a table showing the combination of frequency characteristics of the emitted wave; and

Figure 3 is a diagram of one form of receiving station arranged to co-operate with the sending station of Figure 1.

The system of the present invention employs at its sending station a carrier wave of relatively high frequency upon which there is impressed at different times, differently characterized series of amplitude variations of supersonic frequencies relatively lower than that of the carrier wave, each of the series of amplitude variations being made effective by speech or other desired signals and being modulated thereby. Changes in the characterization of the periodic amplitude variations may be made erratically or in accordance with the will of an operator, and the carrier frequency may also be changed from one to another of a plurality of different, predetermined values.

In a general way the receiving set may be described as comprising a plurality of resonant channels, each including a circuit tuned to one of the carrier frequencies mentioned above and connected to other circuits which are tuned to the lower, supersonic frequencies, with detecting or rectifying means for each of the channels and a single indicating device. In combination with such receiving elements apparatus may be used which provides energy at the lower, supersonic frequencies of the sending station.

Referring more in detail to Fig. 1, there is shown a source of high frequency, said source being in this case a thermionic device 10, having a usual heated filament 11 for emitting electrons, a plate 12 upon which the electrons impinge, and a grid 13 for controlling the passage of electrons. These parts are connected with inter-related, inductively-coupled circuits in such a manner that the energy in the plate circuit reacts on the grid circuit so as to cause the device to oscillate. There is thus produced an oscillatory current of a relatively high frequency determined by the electrical constants of the inter-related circuits.

For producing oscillations of relatively lower but supersonic frequency there is provided a thermionic device 20 having a usual, heated filament 11, plate 12 and grid 13. This device is connected in a regenerative circuit comprising a transformer having windings 22, 23 and 24, which are connected in the plate, grid and secondary output circuits respectively. The plate 12 of the device 20 is maintained at a positive potential with respect to the filament by means of a usual B battery 25, the positive terminal of which is connected through an inductance 26 to the plate. The regenerative circuit is provided with a stoppage condenser 29 and a suitable variable condenser 30, the capacity of which may be adjusted so that oscillations of a predetermined frequency relatively lower than that of the master oscillator are generated. For example, a current having a frequency of 70,000 cycles may thus be produced.

For transforming or stepping up voice or other signalling currents into currents having a supersonic frequency range less than the frequency of the master oscillator 10 and retaining the characteristic variations of the signalling currents, the output circuit of the generator 20 is connected with a signal modulator comprising a transformer 40 having its primary winding connected in series with a signal transmitter, in this case

a telephone transmitter 42, and its secondary windings respectively connected in the input circuits of a pair of thermionic devices 43 and 44, each having a customary, heated filament, plate and grid. The output circuits of the thermionic devices 43 and 44 include the primary windings of a coupling transformer 45 and a common, plate-potential battery 46. The secondary winding of the transformer 45 is connected to armatures 46′ and 47 of a relay 48. The winding 24 and the windings of the transformer 45 are so arranged that the electro-motive forces induced in the secondary winding of the transformer 45 during operation of the generator 20 are normally equal and opposite, and thus currents of the lower, supersonic frequency produce substantially no effect therein, except when the transmitter 42 is producing current variations. Thus a so-called "push-pull" modulator is obtained, by means of which electromotive forces corresponding to the two side bands of the voice-modulated, lower, supersonic frequency generated by the device 20 may be produced in the secondary winding of the transformer 45.

For selecting a desired filter, the back contacts of the armatures 46′ and 47 are connected to armatures 50 and 51 of a second relay 52, the normally closed contacts of which are connected to a band filter 53, while the normally open contacts of the armatures 50 and 51 of the relay 52 are connected to a differently characterized band filter 54 and the normally open contacts of the armatures 46′ and 47 of the relay 48 are connected to a still differently characterized band filter 55. By operating one of these relays, or leaving them deenergized, a desired one of the filters 53, 54 and 55 may be used. The band filter 53 comprises a suitable combination of inductances and condensers such as to permit the flow of currents of a desired frequency band, for example, 68,000 to 69,800 cycles per second; the band filter 54 is constructed to transmit currents of, for example, 43,000 to 44,800 cycles; and the band filter 55, currents of, for example, 23,000 to 24,800 cycles. The band filters are designed to suppress currents of other than the respective bands of frequencies. An auxiliary contact 56 on the relay 48 is provided for shunting an auxiliary condenser 57 around the frequency adjusting condenser 30. The capacity of the condenser 57 is adjusted so that when the relay 48 is operated to connect the filter 55 into circuit a change is simultaneously made in the frequency of the current produced by the oscillator 20 so that this current when modulated by the signal current produces a frequency band for which the respective band filter 55 is designed. Similarly when the relay 52 is actuated there is connected into circuit by its auxiliary contact 58, a shunting condenser 59, the capacity of which is such that the currents produced by the oscillator and modulated by voice currents produce a frequency band for which the band filter 54 is designed. In the present instance, the condenser 57 in shunt with the condenser 30 causes the oscillator 20 to produce currents of 25,000 cycles; and condensers 59 and 30 in parallel cause the oscillator 20 to produce currents of 45,000 cycles.

The outputs of the filter circuits are connected to the input circuit of a modulator comprising a thermionic device 61 having a usual filament, plate and grid. The plate circuit of the device 61 includes an inductance 62 and a battery, both of which together with a winding 63 are also connected in the plate circuit of the master oscillator 12. The winding 63 forms part of a coupling transformer 64, the secondary winding 65 of which is connected in the circuit of an antenna 66. Accordingly, the amount of energy supplied to the antenna by the master oscillator 10 is varied upon operation of the device 61.

For varying the frequency of oscillation of the device 10 there is provided a pair of relays 70 and 71, the contacts of which connect into circuit condensers 72 and 73 respectively, the capacities of which are selected so as to change the characteristics of the circuit of the oscillator 10 to change the fundamental frequency produced thereby to desired amounts. For example, if the fundamental frequency generated by the oscillator 10 with condensers 72 and 73 out of circuit is 1,000,000 cycles per second, the capacity of the condenser 72 may be such as to cause it to provide currents of, for example, 900,000 cycles and that of the condenser 73 may be such as to produce currents of 800,000 cycles.

The relays 48, 52, 70 and 71 are operated in varying combinations under control of a frequency control switch comprising an arm 80 constantly rotating at a desired rate of speed, which may be constantly changed in an erratic manner if desired, over an arcuate row of contacts so as to establish electrical connections therebetween. The table given in Figure 2 shows in the first vertical column numerals representing the switch points as designated in Figure 1. The normal position of the arm 80 as shown is numbered 1. In this position none of the relays is operated, and thus the energy emitted has the form of oscillations of, for example, 1,000,000 cycles per second having periodic variations impressed thereon of from 68,000 to 69,800 cycles per second, it being assumed that the frequency of the voice currents impressed upon the transmitter 42 varies between 200 and 2000 cycles and that the filter 53 suppresses the upper

side band. The table shows successively the fundamental frequency and the variation frequency for the successive positions of the switch (last two columns) and in the 2nd and 3rd columns designates the actuated relays. In position 2, for example, a circuit is closed from grounded battery, winding of relay 70, contact 2, and arm 80, contact 2, winding of relay 52 to ground, operating relays 70 and 52 and connecting into circuit condensers 72 and 59 and the band filter 54. In position 3, for example, a circuit is closed from grounded battery, resistance coil 81, contact 3, and arm 80, contact 3, winding of relay 48 to ground, operating relay 48 and connecting into circuit condenser 57 and the band filter 55.

In the form of receiving station illustrated in Figure 3, there is provided a receiving element of such nature as to intercept Hertzian waves and be capable of having oscillations set up therein in response to such waves. As shown, an antenna 100 of well known type is used, coupled to a closed, oscillatory circuit 101 comprising an inductance 102 and a condenser 103. The capacity of the condenser is selected so that the closed, oscillatory circuit 101 is tuned to one of the fundamental frequencies used, for example, the circuit may be tuned to 1,000,000 cycles per second. A second condenser 104 may be connected in parallel with the condenser 103, when desired, so as to render the closed oscillatory circuit responsive to currents of another of the fundamental frequencies used, for example, 900,000 cycles per second. Similarly, a third condenser 105 may be connected in parallel with the condenser 103, when desired, so as to render the closed, oscillatory circuit responsive to currents of still another of the fundamental frequencies used, for example, 800,000 cycles per second. The condensers 104 and 105 are connected into circuit by switching devices, such as relays 106 and 107 respectively.

For detecting the received energy to produce the lower, supersonic currents, there is provided a detector 110, which may be a three-electrode, thermionic vacuum tube having a usual filament, plate and grid. A filament-heating battery 111 supplies current to incandesce the filament, and arranged in shunt with this battery is a potentiometer 112 having a slider 113 connected to the associated, closed, oscillatory circuit whereby the normal potential of the grid of the thermionic device 110 may be adjusted. A plate-potential battery 114 of suitable voltage maintains a positive potential on the plate of the thermionic device with respect to its filament, there being included in this circuit four inductances in series. These inductances form primary windings of coupling transformers 115, 116, 117, 118, respectively, through which is induced a current corresponding to the envelope of the output current of the detector.

A by-pass condenser 119 is provided in shunt with the primary windings of the transformers 115, 116 and 117 collectively, so that the high frequency variations in the output of the device 10 find a path through the condenser 119 and the primary winding of the transformer 118. High frequency currents are thus induced in the secondary winding of the transformer 118.

For detecting the high frequency currents induced in the secondary winding of the transformer 118 and operating a relay thereby, there is provided a thermionic device 120 having a customary heated filament, plate and grid. The input of this device is connected to the secondary winding of the transformer 118, a potentiometer 121 and its associated slider 122 being connected in the circuit in order to control the normal grid potential. The plate of the device 120 is maintained normally at a positive potential with respect to the filament thereof by means of a suitable source of plate potential, such as a battery 123. Included in the plate circuit is the winding of a relay 124 having a by-pass condenser 125 in shunt therewith. The relay 124 is provided with a normally open contact arranged to be closed upon energization of the relay winding and to control the circuit of a magnet 126 and operating battery 127. A grid or so-called "C" battery 128 may also be employed in maintaining a desired normal potential on the grid of the device 120.

Cooperating with the magnet 126 is an armature 130 having a pawl 131 pivotally secured to the free end of the armature and engaging the teeth of a ratchet wheel 132. The teeth are arranged so that energization of the magnet 126 and consequent attraction of the armature 130 pulls the pawl 131 forward to engage the next tooth. The armature 130 is provided with a retractile spring, not shown, whereby upon deenergization of the magnet 126 the ratchet wheel 132 is moved one step in a clockwise direction. The wheel 132 is mounted on a suitable switch shaft 132' upon which is also mounted a switch arm 133 insulated therefrom. Each time the magnet 126 is operated and released the arm 133 is moved one step in a clockwise direction. In the path of movement of the ends of the arm 133 is an arcuate row of contacts positioned to contact with the arm in successive stopping positions of the arm. The arm is shown in the normal position, and in each of the other positions different combinations of circuits are closed for a purpose which will subsequently be set forth.

The input circuit of the device 120 is normally tuned by means of a condenser 140 to a frequency corresponding to the funda-

mental frequency of the energy emitted by the sending station of Figure 1 when relays 70 and 71 are deenergized, for example, 1,000,000 cycles per second. A second condenser 141 may be connected in parallel with the condenser 140 when desired, as by the operation of the relay 106 the right hand armature and front contact of which closes the circuit of the condenser 141. Thus by the operation of the relay 106 the input circuit of the device 120 is tuned to a different frequency, which may be the fundamental frequency of the energy emitted by the sending station of Figure 1, when relay 70 is operated, for example, 900,000 cycles per second. Similarly, a third condenser 142, the circuit of which is controlled by the right hand armature and front contact of the relay 107, may thereby be connected in parallel with the condenser 140 so as to render the input circuit of the device 120 resonant to currents of still another frequency, corresponding to the fundamental frequency of the energy emitted by the sending station of Figure 1 when relay 71 is operated, for example, 800,000 cycles per second.

For conducting currents corresponding to the supersonic, periodic, amplitude variations impressed upon the energy emitted from the sending station of Figure 1, there is provided a filter circuit for each of the bands of frequencies so impressed. For example, there is connected to the secondary windings of the transformers 115, 116 and 117 a corresponding plurality of filters such as 222, 221 and 220. These filters are designed to pass currents of desired bands of frequencies. For example, the filter 220 is designed to pass currents of 68,000 to 69,800 cycles inclusive; the filter 221 currents of 43,000 to 44,800 cycles inclusive, and the filter 222 currents of 23,000 to 24,800 cycles inclusive. The outputs of the filters are connected to the input of a detector 223 through coupling transformers 224, 225 and 226, the connection being controlled by electro-magnetic switching devices such as 227, 228 and 229 respectively. The detector 223 may take the form of a usual three-electrode, thermionic, vacuum tube, having a customary heated filament, plate and grid and having a potentiometer associated therewith for maintaining its grid at a desired normal potential with respect to its filament.

For producing energy corresponding in frequency to that of the oscillatory current suppressed at the sending station, there is included in the output of each filter 224, 225, 226 the secondary winding of a transformer 230, 231, 232, the primary windings of which are in circuit with suitable sources 233, 234, 235 respectively, of alternating current of predetermined frequency. The frequencies of the sources are relatively different. For example, the source 235 is in the present instance of 70,000 cycles; 234 of 45,000 cycles and 233 of 25,000 cycles. The output circuit of the detector 223 includes an indicating device 236 and a suitable battery 237 for maintaining a positive potential upon the plate with respect to the filament.

The relays 106, 107, 227 and 228 are included in circuits controlled by the arm 133 in a manner similar to that of the relays 70, 71, 52, 48 and the arm 80 of Figure 1, it being noted that the connections of the arcuate row of contacts of the arm 133 correspond to those of the row of contacts of the arm 80. A resistance coil 150 corresponds in function to the resistance 81. Thus in the successive stopping positions of the arm 133 different combinations of relays are operated, as was described in connection with Figure 1. The winding of the relay 229 is in series with the winding of both relays 227 and 228 so that the cutoff relay 229 is operated whenever either of the relays 227 and 228 is operated.

In operation, the sending station of Figure 1 emits radiant energy having the form of high frequency oscillations such as given in the fourth column of the table of Figure 2, upon which there is impressed periodic amplitude variations produced by modulating a supersonic frequency by speech currents, such as given in the fifth column of the table of Figure 2. The system of frequency changes is irregular and thus there is imparted to the wave form of the emitted energy a disordered succession of changes of frequency, so that an unauthorized station cannot tune in sufficiently quickly to overhear the message.

At the receiving station, when the first signal is received, the arm 133 being at the normal position shown, none of the relays is operated, and thus only the condenser 103 is effectively in circuit, and the closed, oscillatory circuit 101 is responsive to the emitted fundamental frequency, as listed in the first line of the table of Figure 2. It is understood that while there may be a slight capacitative effect across the left hand contact springs of the relays 106 and 107 the adjustment of the condenser 103 may be made with such effect taken in consideration.

The device 110 acting as a detector produces in the primary windings of the transformers 115, 116 and 117 current corresponding to the supersonic periodic variations being impressed upon the transmitted wave at the sending station, as listed in the table of Figure 1. In the present instance these variations have a frequency of from 68,000 to 69,800 for example. Accordingly only the filter 220 allows the current to pass, the other filters 221 and 222 being arranged to suppress such frequencies. Since relays 227, 228 and 229 are deenergized, the output of the filter 220 only is connected to the input

of the thermionic device 223. The source 235 is effective, because of this condition of the relays, to impress on the input of the device 223 a current of the frequency of the speech-controlled current generated by the oscillator 20 of the sending station.

The device 223 acting as a detector produces in its output circuit current variations corresponding to the signal currents impressed upon the current generated by the oscillator 20 by the signal modulator at the sending station. The indicating device 236 is thereby caused to reproduce the signals as voice waves.

The high frequency currents appearing in the output circuit of the first detector 110 are by-passed through the condenser 119 and the primary winding of the transformer 118. High frequency currents are thus induced in the secondary winding of the transformer 118 and the closed, oscillatory circuit formed thereby in combination with the condenser 140. The device 120 acting as a detector produces in its output circuit a rectified current the intensity of which may be determined by a suitable choice of the normal grid potential 128 and plate potential 123, and preferably such as will operate the sensitive relay 124 only when the input circuit is acted upon by currents induced through the transformer 118. Energization of the winding of the relay 124 causes its armature to be attracted, thus closing the local circuit which includes battery 127 and magnet 126, energizing the magnet 126 and drawing forward the pawl 131 into engagement with the next following tooth of the ratchet wheel 132.

When the arm 80 moves from its first position to position 2, relays 70 and 52 are operated and the circuit characteristics of the sending station are modified to emit energy of the type specified in the second line of the table of Figure 2. The input circuit of the detector 120 is now not tuned to the energy impressed thereon through the transformer 118 and the intensity of current in its plate circuit is reduced so that the relay 124 is released. The magnet 126 is accordingly deenergized and its armature retracted by force of its retractile spring, so that the ratchet wheel 132 and the arm 133 are rotated clockwise one step, to position 2. Relays 106, 228, and 229 are then energized, thus connecting into circuit the condensers 104 and 141. The input circuits of the detectors 110, 120 are thus tuned to be responsive to the energy received at this time. The energization of the relay connects the filter 221 into circuit and makes the source 234 effective, and relay 229 disconnects the filter 220 and source 235. The filter 221 permits the passage of currents of the variation frequencies used in position 2 (see the table of Figure 2) and the source 234 supplies a current of the frequency of that used at the sender. The relay 124 is operated, and prepares the pawl 131 as before. When the arm 80 again moves the arm 133 is moved as before, the two arms continuing in synchronism through successive cycles. The fundamental frequency is used for the double purpose of carrying the lower supersonic frequency variations so as to conceal the message and to control the tuning, i. e., the responsiveness of the receiving station. The lower supersonic frequency is used to conceal the message, and since it only appears intermittently as controlled by the voice, and is changed in frequency periodically, other stations cannot be tuned thereto sufficiently quickly to overhear the message.

The invention upon which this application is based is broader than the specific embodiments shown and described for the purpose of illustrating some of the ways in which it may be employed. The scope of the invention is therefore understood not to be limited by the present specific description. I intend no limitations other than those imposed by the appended claims.

What is claimed is:—

1. A radio system comprising at its sending station a generator of high frequency oscillations, means for producing periodic variations of said high frequency oscillations arranged to be non-actuative when not affected by signal disturbances, means for periodically changing the frequency of said variations, a signal transmitter arranged when operated to cause said periodic modifying means to affect the high frequency oscillations, whereby waves modified by signal controlled periodic variations are produced; combined with a receiving element arranged to intercept said waves, a closed oscillator circuit responsive to the high frequency oscillations, another closed oscillatory circuit responsive to the signal controlled periodic variations and means controlled by the high frequency oscillations for modifying the characteristics of said first named oscillatory circuit.

2. A radio system comprising at its sending station a generator of high frequency oscillations, means for producing periodic variations of said high frequency oscillations arranged to be non-actuative when not affected by signal disturbances, means for periodically changing the frequency of said variations, a signal transmitter arranged when operated to cause said periodic modifying means to affect the high frequency oscillations, whereby waves modified by signal controlled periodic variations are produced; combined with a receiving element arranged to intercept said waves, a closed oscillator circuit responsive to the high frequency oscillations, another closed oscilla-

tory circuit responsive to the signal controlled periodic variations and means controlled by the high frequency oscillations for modifying the characteristics of said last named oscillatory circuit.

3. A radio system comprising at its sending station a generator of high frequency oscillations, means for producing periodic variations of said high frequency oscillations arranged to be nonactuative when not affected by signal disturbances, means for periodically changing the frequency of said variations, a signal transmitter arranged when operated to cause said periodic modifying means to affect the high frequency oscillations, whereby waves modified by signal controlled periodic variations are produced; combined with a receiving element arranged to intercept said waves, a closed oscillator circuit responsive to the high frequency oscillations, another closed oscillatory circuit responsive to the signal controlled periodic variations and means controlled by the high frequency oscillations for modifying the characteristics of said closed oscillatory circuits.

4. A radio system comprising at its sending station a generator of high frequency oscillations, means for producing periodic variations of said high frequency oscillations arranged to be nonactuative when not affected by signal disturbances, means for periodically changing the frequency of said variations, a signal transmitter arranged when operated to cause said periodic modifying means to affect the high frequency oscillations, whereby waves modified by signal controlled periodic variations are produced; combined with a receiving element arranged to intercept said waves, a closed oscillator circuit responsive to the high frequency oscillations, another closed oscillatory circuit responsive to the signal controlled periodic variations and means controlled by the high frequency oscillations for modifying the characteristics of at least one of said closed oscillatory circuits.

5. A radio system comprising at its sending station a generator of high frequency oscillations, means for producing periodic variations of said high frequency oscillations arranged to be nonactuative when not affected by signal disturbances, means for periodically changing the frequency of said variations, a signal transmitter arranged when operated to cause said periodic modifying means to affect the high frequency oscillations, whereby waves modified by signal controlled periodic variations are produced; combined with a receiving element arranged to intercept said waves, a closed oscillator circuit rsponsive to the high frequency oscillations, another closed oscillatory circuit responsive to the signal controlled periodic variations and means controlled from the sending station by changes in the waves for modifying the characteristics of at least one of said closed oscillatory circuits.

6. A radio system comprising at its sending station a generator of high frequency oscillations, means for producing periodic variations of said high frequency oscillations arranged to be nonactuative when not affected by signal disturbances, means for periodically changing the frequency of said variations, a signal transmitter arranged when operated to cause periodic modifying means to affect the high frequency oscillations, whereby waves modified by signal controlled periodic variations are produced; combined with a receiving element arranged to intercept said waves, a closed oscillator circuit responsive to the high frequency oscillations, another closed oscillatory circuit responsive to the signal controlled periodic variations and means controlled from the sending station by changes in the waves for modifying the characteristics of said last named oscillatory circuit.

7. A radio system comprising at its sending station a generator of high frequency oscillations, means for producing periodic variations of said high frequency oscillations arranged to be nonactuative when not affected by signal disturbances, means for periodically changing the frequency of said variations, a signal transmitter arranged when operated to cause said periodic modifying means to affect the high frequency oscillations, whereby waves modified by signal controlled periodic variations are produced; combined with a receiving element arranged to intercept said waves, a closed oscillator circuit responsive to the high frequency oscillations, another closed oscillatory circuit responsive to the signal controlled periodic variations and means controlled from the sending stations by changes in the waves for modifying the characteristics of said closed oscillatory circuits.

8. A radio system comprising at its sending station a generator of high frequency oscillations, means for producing periodic variations of said high frequency oscillations arranged to be non-actuative when not affected by signal disturbances, means for periodically changing the frequency of said variations, a signal transmitter arranged when operated to cause said periodic modifying means to affect the high frequency oscillations, whereby waves modified by signal controlled periodic variations are produced; combined with a receiving element arranged to intercept said waves, a closed oscillator circuit responsive to the high frequency oscillations, another closed oscillatory circuit responsive to the signal controlled periodic variations and means con-

trolled from the sending station by changes in the waves for modifying the characteristics of at least one of said closed oscillatory circuits.

9. A method of transmitting radio signals which consists in modifying high frequency waves by waves of a different frequency rendered effective by signals, changing one of said frequencies from one to another of a plurality of different, predetermined values, receiving the waves thus produced with differently responsive instrumentalities and changing the responsiveness of certain of said instrumentalities under the control of the received waves.

10. A method of transmitting radio signals which consists of modifying high frequency waves by waves of a different and continually changing frequency rendered effective by signals, receiving the waves thus produced with differently responsive instrumentalities and changing the responsiveness of said instrumentalities in step with changes in frequency of said waves.

11. A method of transmitting radio signals which consists in generating high frequency waves, changing the frequency of said waves, receiving the waves with differently tuned instrumentalities and changing the tuning of said instrumentalities under the control of the received waves and in accordance with changes in the frequency of the waves.

12. A method of transmitting signals which consists of modifying high frequency waves by waves of a lower and continually changing frequency rendered effective by signals, receiving the waves thus produced with differently responsive instrumentalities and changing the responsiveness of said instrumentalities in step with changes in frequency of said waves.

13. A method of transmitting radio signals which consists of producing side bands above and below each of a plurality of predetermined frequencies by signal disturbances, suppressing the higher of each of said pairs of said bands, modifying high frequency waves by impressing thereon the waves of a selected unsuppressed side band, re eiving the waves thus produced in differently responsive instrumentalities, supplying radiant energy of said predetermined frequency and changing the responsiveness of at least one of said instrumentalities to correspond to the selected unsuppressed side band.

14. A radio system comprising a sending station including a generator of high frequency oscillations, means for producing periodic variations of said high frequency oscillations arranged to be non-actuative when not affected by signal disturbances, means for periodically changing the frequency of said high frequency oscillations in relatively large steps, and a signal transmitter arranged when operated to cause said periodic modifying means to affect the high frequency oscillations, whereby waves modified by signal-controlled periodic variations are produced and a receiving station including an element arranged to intercept said waves, a closed, oscillatory circuit responsive to the high frequency oscillations, another closed, oscillatory circuit responsive to the signal-controlled periodic variations and means for changing the tuning of said first-mentioned oscillatory circuit under the control of the received waves.

15. A radio system comprising a sending station including a generator of high frequency oscillations, means for producing periodic variations of said high frequency oscillations arranged to be non-actuative when not affected by signal disturbances, means for periodically changing the frequency of said high frequency oscillations in relatively large steps, and a signal transmitter arranged when operated to cause said periodic modifying means to affect the high frequency oscillations, whereby waves modified by signal-controlled periodic variations are produced and a receiving station including an element arranged to intercept said waves, a closed, oscillatory circuit responsive to the high frequency oscillations, another closed, oscillatory circuit responsive to the signal-controlled periodic variations and means controlled by the received waves for changing the tuning of said first-mentioned circuit in step with changes in the frequency of said waves.

16. A radio system comprising a sending station including a generator of high frequency oscillations, means for producing periodic variations of said high frequency oscillations arranged to be non-actuative when not affected by signal disturbances, means for periodically changing the frequency of said high frequency oscillations in relatively large steps, and a signal transmitter arranged when operated to cause said periodic modifying means to affect the high frequency oscillations, whereby waves modified by signal-controlled periodic variations are produced and a receiving station including an element arranged to intercept said waves, a closed, oscillatory circuit responsive to the high frequency oscillations, another closed, oscillatory circuit responsive to the signal controlled periodic variations and means controlled by the received waves for changing the tuning of said first-mentioned circuit whenever the frequency of the high frequency oscillations is changed.

17. A radio system comprising a sending station including a generator of high frequency oscillations, another generator of oscillations of different frequency, a frequency changer for periodically changing

the frequency of the first named oscillations in relatively large steps, a push-pull modulator interposed between said generators, and a signal transmitter cooperatively associated with the modulator, whereby waves modified by signal controlled periodic variations are produced and a receiving element arranged to intercept said waves, a closed, oscillatory circuit responsive to the high frequency oscillations, another closed, oscillatory circuit responsive to the signal-controlled periodic variations and means for changing the tuning of said first-mentioned circuit, said means including a relay, and means for operating the relay whenever the frequency of the high frequency oscillations is changed.

18. A method of transmitting radio signals which consists in modifying high frequency waves by waves of a different frequency rendered effective by signals, periodically changing the frequency of said high frequency waves in relatively large steps, receiving the waves thus produced with differently tuned instrumentalities and changing the tuning of said instrumentalities under the control of the received waves.

19. A method of transmitting radio signals which consists in modifying high frequency waves by waves of a different frequency rendered effective by signals, periodically changing the frequency of said high frequency waves in relatively large steps, from one to another of a plurality of different, predetermined values, receiving the waves thus produced with differently tuned instrumentalities and changing the tuning of said instrumentalities in step with changes in the frequency of said waves and under the control of the received waves.

20. A method of transmitting radio signals which consists in modifying high frequency waves by waves of a lower frequency, periodically changing the frequency of said high frequency waves in relatively large steps from one to another of a plurality of different, pretermined values, periodically changing the frequency of said second-mentioned waves, receiving the waves thus produced with differently responsive instrumentalities and selecting under the control of the received waves instrumentalities tuned respectively to the values of the higher and lower frequencies at any particular time.

21. A method of transmitting radio signals which consists in modifying high frequency waves by waves of a lower frequency rendered effective by signals, periodically changing the frequency of said high frequency waves, periodically changing the frequency of said second-mentioned waves, receiving the waves thus produced with differently responsive instrumentalities and selecting under the control of the received waves and in step with changes in the frequency characteristic of said waves, instrumentalities tuned respectively to the values of said higher and lower frequencies.

22. A radio system comprising at its sending station a generator of high frequency oscillations, means for producing periodic variations of said high frequency oscillations arranged to be non-actuative when not affected by signal disturbances, means for periodically changing the frequency of said variations, means for periodically changing the frequency of said high frequency oscillations in relatively large steps, a signal transmitter arranged when operated to cause said periodic modifying means to affect the high frequency oscillations, whereby waves modified by signal controlled periodic variations are produced; combined with a receiving element arranged to intercept said waves, a closed oscillator circuit responsive to the high frequency oscillations, another closed oscillatory circuit responsive to the signal controlled periodic variations and means controlled by the high frequency oscillations for modifying the characteristics of at least one of said closed oscillatory circuits.

23. A radio system comprising at its sending station a generator of high frequency oscillations, another generator of oscillations of different frequency, a frequency changer for periodically changing the frequency of the last named oscillations, a frequency changer for periodically changing the frequency of the first named oscillations in relatively large steps, a push-pull modulator interposed between said generators, a signal transmitter co-operatively associated with the modulator, whereby waves modified by signal controlled periodic variations are produced; combined with a receiving element arranged to intercept said waves, a closed oscillatory circuit responsive to the high frequency oscillations, another closed oscillatory circuit responsive to the signal controlled periodic variations and means controlled by the high frequency oscillations for modifying the characteristics of at least one of said closed oscillatory circuits.

24. A method of transmitting radio signals which consists in modifying high frequency waves by waves of a different and continually changing frequency rendered effective by signals, periodically changing the frequency of said high frequency waves, receiving the waves thus produced with differently responsive instrumentalities and changing the responsiveness of said instrumentalities under the control of the received waves.

25. A method of transmitting radio signals which consists in modifying high fre-

quency waves by waves of a different frequency, periodically changing the frequency of said second-mentioned waves, receiving the waves thus produced with differently responsive instrumentalities and selecting under the control of the received waves instrumentalities tuned to said second-mentioned frequency in step with changes in such frequency.

26. A method of transmitting radio signals which consists in modifying high frequency waves by waves of a lower frequency rendered effective by signals and continually changing in frequency within a range determined by the signals, periodically changing the mean frequency of the frequency range of said second-mentioned waves, receiving the waves thus produced with differently responsive instrumentalities and selecting under the control of the received waves instrumentalities tuned to said frequency range in step with changes in the mean frequency of the frequency range.

27. A radio system comprising at its sending station a generator of high frequency oscillations, means for periodically changing the frequency of said high frequency oscillations in relatively large steps, means for transforming signal currents into a supersonic frequency range and retaining the characteristics of the signal currents, means for changing periodically and continuously the supersonic frequency range employed, means for modulating the currents generated by the high frequency generator according to the transformed supersonic signal currents, whereby waves modified by signal controlled periodic variations are produced; combined with a receiving element arranged to intercept said waves, a closed oscillatory circuit responsive to each series of high frequency oscillations employed, other closed oscillatory circuits responsive to the signal controlled periodic variations employed and means controlled by the high frequency oscillations for modifying the characteristics of said first named oscillatory circuit.

28. A radio system comprising at its sending station a generator of high frequency oscillations, means for periodically changing the frequency of said high frequency oscillations in relatively large steps, means for transforming signal currents into a supersonic frequency range and retaining the characteristics of the signal currents, means for changing periodically and continuously the supersonic frequency range employed, means for modulating the currents generated by the high frequency generator according to the transformed supersonic signal currents, whereby waves modified by signal controlled periodic variations are produced; combined with a receiving element arranged to intercept said waves, a closed oscillatory circuit responsive to each series of high frequency oscillations employed, other closed oscillatory circuits responsive to the signal controlled periodic variations employed, and means controlled by the high frequency oscillations for modifying the characteristics of said last named oscillatory circuits.

29. A radio system comprising at its sending station a generator of high frequency oscillations, means for periodically changing the frequency of said high frequency oscillations in relatively large steps, means for transforming signal currents into a supersonic frequency range and retaining the characteristics of the signal currents, means for changing periodically and continuously the supersonic frequency range employed, means for modulating the currents generated by the high frequency generator according to the transformed supersonic signal currents, whereby waves modified by signal controlled periodic variations are produced; combined with a receiving element arranged to intercept said waves, a closed oscillatory circuit responsive to each series of high frequency oscillations employed, other closed oscillatory circuits responsive to the signal controlled periodic variations employed, and means controlled by the high frequency oscillations for modifying the characteristics of said closed oscillatory circuits.

30. A radio system comprising at its sending station a generator of high frequency oscillations, means for periodically changing the frequency of said high frequency oscillations in relatively large steps, means for transforming signal currents into a supersonic frequency range and retaining the characteristics of the signal currents, means for changing periodically and continuously the supersonic frequency range employed, means for modulating the currents generated by the high frequency generator according to the transformed supersonic signal currents, whereby waves modified by signal controlled periodic variations are produced; combined with a receiving element arranged to intercept said waves, a closed oscillatory circuit responsive to each series of high frequency oscillations employed, other closed oscillatory circuits responsive to the signal controlled periodic variations and means controlled by the high frequency oscillations for modifying the characteristics of at least one of said closed oscillatory circuits.

31. A radio system comprising at its sending station a generator of high frequency oscillations, means for periodically changing the frequency of said high frequency oscillations in relatively large steps, means for transforming signal currents into a supersonic frequency range and retaining the characteristics of the signal currents, means for changing periodically and continuously the supersonic frequency range employed,

means for modulating the currents generated by the high frequency generator according to the transformed supersonic signal currents, whereby waves modified by signal controlled periodic variations are produced; combined with a receiving element arranged to intercept said waves, a closed oscillatory circuit responsive to each series of high frequency oscillations employed, other closed oscillatory circuits responsive to the signal controlled periodic variations employed, and means controlled from the sending station by changes in the waves for modifying the characteristics of said first named oscillatory circuit.

32. A radio system comprising at its sending station a generator of high frequency oscillations, means for periodically changing the frequency of said high frequency oscillations in relatively large steps, means for transforming signal currents into a supersonic frequency range and retaining the characteristics of the signal currents, means for changing periodically and continuously the supersonic frequency range employed, means for modulating the currents generated by the high frequency generator according to the transformed supersonic signal currents, whereby waves are produced; combined with a receiving element arranged to intercept said waves, a closed oscillatory circuit responsive to each series of high frequency oscillations employed, other closed oscillatory circuits responsive to the signal controlled periodic variations employed, and means controlled from the sending station by changes in the waves for modifying the characteristics of said last named oscillatory circuit.

33. A radio system comprising at its sending station a generator of high frequency oscillations, means for periodically changing the frequency of said high frequency oscillations in relatively large steps, means for transforming signal currents into a supersonic frequency range and retaining the characteristics of the signal currents, means for changing periodically and continuously the supersonic frequency range employed, means for modulating the currents generated by the high frequency generator according to the transformed supersonic signal currents, whereby waves modified by signal controlled periodic variations are produced; combined with a receiving element arranged to intercept said waves, a closed oscillatory circuit responsive to each series of high frequency oscillations employed, other closed oscillatory circuits responsive to the signal controlled periodic variations employed, and means controlled from the sending station by changes in the waves for modifying the characteristics of said closed oscillatory circuits.

34. A radio system comprising at its sending station a generator of high frequency oscillations, means for periodically changing the frequency of said high frequency oscillations in relatively large steps, means for transforming signal currents into a supersonic frequency range and retaining the characteristics of the signal currents, means for changing periodically and continuously the supersonic frequency range employed, means for modulating the currents generated by the high frequency generator according to the transformed supersonic signal currents, whereby waves modified by signal controlled periodic variations are produced; combined with a receiving element arranged to intercept said waves, a closed oscillatory circuit responsive to each series of high frequency oscillations employed, other closed oscillatory circuits responsive to the signal controlled periodic variations employed, and means controlled from the sending station by changes in the waves for modifying the characteristics of at least one of said closed oscillatory circuits.

35. A radio system comprising at its sending station a generator of high frequency oscillations, means for periodically changing the frequency of said high frequency oscillations in relatively large steps, means for transforming signal currents into a supersonic frequency range and retaining the characteristics of the signal currents, means for changing periodically and continuously the supersonic frequency range employed, means for modulating the currents generated by the high frequency generator according to the transformed supersonic signal currents, whereby waves modified by signal controlled periodic variations are produced; combined with a receiving element arranged to intercept said waves, a closed oscillatory circuit responsive to each series of high frequency oscillations employed, other closed oscillatory circuits responsive to the signal controlled periodic variations employed, and means controlled by the high frequency oscillations for modifying the characteristics of at least one of said closed oscillatory circuits.

36. A radio system comprising at its sending station a generator of high frequency oscillations, means for periodically changing the frequency of said high frequency oscillations in relatively large steps, means for transforming signal currents into a supersonic frequency range and retaining the characteristics of the signal currents, means for changing periodically and continuously the supersonic frequency range employed, means for modulating the currents generated by the high frequency generator according to the transformed supersonic signal currents, whereby waves modified by signal controlled periodic variations are pro-

duced; combined with a receiving element arranged to intercept said waves, a closed oscillatory circuit responsive to each series of high frequency oscillations employed, other closed oscillatory circuits responsive to the signal controlled periodic variations employed, and means controlled from the sending station by changes in the waves for modifying the characteristics of at least one of said closed oscillatory circuits.

37. A radio system comprising at its sending station a generator of high frequency oscillations, means for periodically changing the frequency of said high frequency oscillations in relatively large steps, means for transforming voice currents into a supersonic frequency range and retaining the characteristics of the signal currents, means for changing periodically and continuously the supersonic frequency range employed, means for modulating the currents generated by the high frequency generator according to the transformed supersonic voice currents, whereby waves modified by voice controlled periodic variations are produced; combined with a receiving element arranged to intercept said waves, a closed oscillatory circuit responsive to each series of high frequency oscillations employed, other closed oscillatory circuits responsive to the voice controlled periodic variations employed, and means controlled by the high frequency oscillations for modifying the characteristics of at least one of said closed oscillatory circuits.

38. A radio system comprising at its sending station a generator of high frequency oscillations, means for periodically changing the frequency of said high frequency oscillations in relatively large steps, means for transforming voice currents into a supersonic frequency range and retaining the characteristics of the signal currents, means for changing periodically and continuously the supersonic frequency range employed, means for modulating the currents generated by the high frequency generator according to the transformed supersonic voice currents, whereby waves modified by voice controlled periodic variations are produced; combined with a receiving element arranged to intercept said waves, a closed oscillatory circuit responsive to each series of high frequency oscillations employed, other closed oscillatory circuits responsive to the voice controlled periodic variations employed, and means controlled from the sending station by changes in the waves for modifying the characteristics of at least one of said closed oscillatory circuits.

39. A radio system comprising a sending station including a generator of high frequency oscillations, means for modulating the high frequency oscillations and means for changing the frequency range of said modulations, and a receiving station including means for producing current corresponding in frequency with said modulations, an indicator, circuits interposed between said current producing means and the indicator and tuned respectively to the different frequency ranges of said modulations and means controlled by the received energy for selectively connecting said last-mentioned circuits to said indicator.

40. A radio system comprising a sending station including a generator of high frequency oscillations, means for changing the frequency of said oscillations from one to another of a plurality of different, predetermined values, means for modulating the high frequency oscillations, and means for changing the frequency ranges of said modulations from one to another of a plurality of different, predetermined values, and a receiving station including a tuned receiving circuit, a detector for producing current corresponding in frequency to the frequency of said modulations, an indicator, circuits interposed between the detector and the indicator and tuned respectively to the different frequency ranges of said modulations, and means controlled by the received energy for changing the tuning of said receiving circuit in accordance with the different frequencies of the high frequency oscillations and for selectively connecting said modulation circuits to the indicator in accordance with changes in the frequency ranges of the modulations impressed upon the high frequency oscillations.

In testimony whereof I hereunto affix my signature.

JOHN HAYS HAMMOND, Jr.