AUSTRALIA

PATENTS ACT 1990

NOTICE OF ENTITLEMENT

We, **Dry Dock Industries, Inc.**, the applicant/Nominated Person in respect of Application No. 48066/93 state the following:-

The Nominated Person is entitled to the grant of the patent because the Nominated Person derives title to the invention from the inventor by assignment.

The Nominated Person is entitled to claim priority from the application listed in the declaration under Article 8 of the PCT because the Nominated Person is the assignee of the applicant in respect of the application listed in the declaration under Article 8 of the PCT, and because that application was the first application made in a Convention country in respect of the invention.

DATED this TENTH day of FEBRUARY 1995

.....

a member of the firm of DAVIES COLLISON CAVE for and on behalf of the applicant(s)

(DCC ref: 1719258)

AU9348066

(12) PATENT ABRIDGMENT (11) Document No. AU-B-48066/93
(19) AUSTRALIAN PATENT OFFICE (10) Acceptance No. 669386

(54) Title
ANCHORING RETAINER FOR THREADED FASTENER

International Patent Classification(s)
(51)[5] F16B 013/08

(21) Application No. : 48066/93 (22) Application Date : 09.08.93

(87) PCT Publication Number : WO94/04835

(30) Priority Data

(31) Number	(32) Date	(33) Country
931915	18.08.92	US UNITED STATES OF AMERICA

(43) Publication Date : 15.03.94

(44) Publication Date of Accepted Application : 06.06.96

(71) Applicant(s)
DRY DOCK INDUSTRIES, INC.

(72) Inventor(s)
JON D SMITH

(74) Attorney or Agent
DAVIES COLLISON CAVE , 1 Little Collins Street, MELBOURNE VIC 3000

(56) Prior Art Documents
US 4943253
US 5002445
US 4984946

(57) Claim

1. An anchoring retainer comprising:

a base at a first axial end having a bore to receive a fastener;

a pedestal member spaced axially from said base, said pedestal member having a bore for sliding on a threaded fastener, and at least a pair of arms connecting said base and said pedestal member;

there being means to assist in the bending movement of said arms to secure said retainer to a wall;

an outer arm extending radially outwardly from said base and connected to an inner arm at a joint, said inner arm extending radially inwardly to said pedestal member, and a recess formed in an outer surface of said outer arm to control the bending movement of said radially outer and inner arms; and

a surface of said radially outer arm is ramped, and engages a ramped surface on said retainer and adjacent said joint when said retainer is tightened to a wall, said ramped surface of said outer arm being drawn towards the wall such

.../2

that said ramped surface adjacent said joint is forced laterally outwardly, and a tip of said joint is forced against an inner face of the wall.

OPI DATE 15/03/94 APPLN. ID 48066/93
AOJP DATE 09/06/94 PCT NUMBER PCT/US93/07578

AU9348066

INTERNATIONAL APPLICATION PUBLISHED UNDER THE PATENT [illegible]

(51) International Patent Classification 5 :		(11) International Publication Number:
F16B 21/00	A1	WO 94/04835
		(43) International Publication Date: 3 March 1994 (03.03.94)

(21) International Application Number: PCT/US93/07578

(22) International Filing Date: 9 August 1993 (09.08.93)

(30) Priority data:
931,915 18 August 1992 (18.08.92) US

(71) Applicant: DRY DOCK INDUSTRIES, INC. [US/US]; 2280 Grove Park, Frenton, MI 48430 (US).

(72) Inventor: SMITH, Jon, D. ; 2280 Grove Park, Fenton, MI 48430 (US).

(74) Agent: RUTHERFORD, Charles, R.; Dykema Gossett, 505 North Woodward Avenue, Suite 3000, Bloomfield Hills, MI 48304 (US).

(81) Designated States: AU, BB, BG, BR, CA, CZ, FI, HU, JP, KP, KR, LK, MG, MN, MW, NO, NZ, PL, RO, RU, SD, UA, European patent (AT, BE, CH, DE, DK, ES, FR, GB, GR, IE, IT, LU, MC, NL, PT, SE), OAPI patent (BF, BJ, CF, CG, CI, CM, GA, GN, ML, MR, NE, SN, TD, TG).

Published
With international search report.

669386

(54) Title: ANCHORING RETAINER FOR THREADED FASTENER

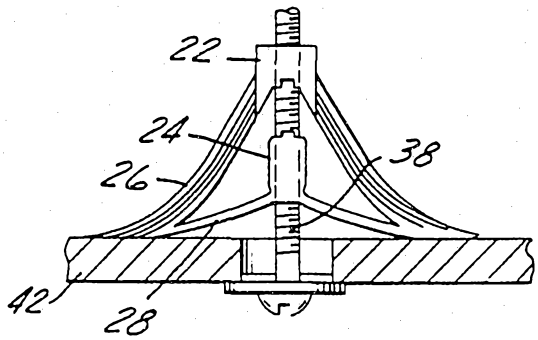

(57) Abstract

A number of improvements to anchoring retainers (20) are disclosed. The improvements ensure that the retainers (20) are securely attached to walls, and that they do not move during attachment after being attached by a threaded fastener (38).

ANCHORING RETAINER FOR THREADED FASTENER

This application in general relates to anchoring retainers for use with threaded fasteners that incorporate improvements over the prior art.

In the prior art, anchoring retainers are used to hold a threaded fastener such as a bolt or screw in a wall. One known type of anchoring retainer can be used in either a blind hold in a solid wall, or alternatively may be used in a thin wall, such as a drywall wall, where the threaded fastener extends entirely through the wall.

It is desirable to improve upon the prior art anchoring retainers to ensure that they securely retain the threaded fastener within the wall. To this end, it is desirable to optimize the structure of the anchoring retainer such that it locks in place on the wall at a desired position which provides the strongest connection. Further, it is an object of the present invention to develop an anchoring retainer which is easily utilizable.

According to the present invention, there is provided an anchoring retainer comprising:

a base at a first axial end having a bore to receive a fastener;

a pedestal member spaced axially from said base, said pedestal member having a bore for sliding on a threaded fastener, and at least a pair of arms connecting said base and said pedestal member;

there being means to assist in the bending movement of said arms to secure said retainer to a wall;

an outer arm extending radially outwardly from said base and connected to an inner arm at a joint, said inner arm extending radially inwardly to said pedestal member, and a recess formed in an outer surface of said outer arm to control the bending movement of said radially outer and inner

AUSTRALIAN PATENT OFFICE 13

arms; and

a surface of said radially outer arm is ramped, and engages a ramped surface on said retainer and adjacent said joint when said retainer is tightened to a wall, said ramped surface of said outer arm being drawn towards the wall such that said ramped surface adjacent said joint is forced laterally outwardly, and a tip of said joint is forced against an inner face of the wall.

A threaded fastener extends freely through the pedestal member, and is threadably received in the base. As the threaded fastener is tightened into a wall, it draws the base towards the pedestal member, compressing the radially outwardly and radially inwardly extending arms along the wall. The recesses formed in the radially outwardly extending arms control the deformation of the arms as the threaded fastener is tightened within the wall. The ramped surfaces mate with ramped surfaces on an opposed one of the inner and outer arms to ensure that the two do not slide laterally relative to each other as they are tightened. This prevents the anchoring retainer from moving away from a desired position as the fastener is tightened.

A preferred embodiment of the present invention will now be described with reference to the drawings in which:-

Figure 1 shows a preferred embodiment of an anchoring retainer;

Figure 2 is a side view of the retainer shown in Figure 1;

Figure 3 is a cross-sectional view along line 18-18 as shown in Figure 1;

Figure 4 is an end view of the retainer shown in Figure 1;

Figure 5A shows the first step in attaching the anchoring retainer shown in Figure 1 to a wall;

Figure 5B shows a subsequent step in the attachment of the retainer shown in Figure 1 to a wall;

AUSTRALIAN PATENT OFFICE 13

Figure 6 shows the final position of the retainer shown in Figure 1 secured to a wall; and

Figure 7 is an enlarged portion of the retainer shown in Figure 6.

A preferred embodiment of an anchoring retainer 90 is illustrated in Figure 1. Preferably, the anchoring retainer is molded from suitable plastics. A base 92 is connected to a pedestal 94 through a radially outwardly extending arm 96 and a radially inwardly extending arm 98. Arms 96 and 98 are connected at a joint 100 which includes a recess 102 and a hinge 104. A cap 106 is received on the threaded retainer 108. As shown in Figure 2, recess 102 is formed only on radially outer arms 96, and not on radially inner arm 98. Figure 3 shows further features of arms 96 and 98. Figure 4 shows recess 102 on arms 96 and 98.

As shown in Figure 5A, when retainer 90 is received on threaded retainer 108, joint 100 abuts an inner face 116 of thin wall 109.

As shown in Figure 5B, as the threaded retainer 108 is tightened, the arms begin to pivot about recess 102 and hinge 104. A ramped surface 110 cooperates with a mating ramped surface 112 formed on radially outer arm 96 to bias an outer tip 114 of joint 100 against inner face 116 of wall 109. This firmly secures retainer 90 on wall 109.

As shown in Figure 6, when fully tightened, ramped surface 112 has forced ramped surface 110 to pivot outwardly such that outer tip 114 is biased onto inner face 116. This is most clearly shown in Figure 7, which shows the ramped surfaces 110 and 112.

The foregoing describes only one embodiment of the present invention and modifications, obvious to those skilled in the art, can be made thereto without departing from the scope of the present invention.

AUSTRALIAN PATENT OFFICE

THE CLAIMS DEFINING THE INVENTION ARE AS FOLLOWS:-

1. An anchoring retainer comprising:

a base at a first axial end having a bore to receive a fastener;

a pedestal member spaced axially from said base, said pedestal member having a bore for sliding on a threaded fastener, and at least a pair of arms connecting said base and said pedestal member;

there being means to assist in the bending movement of said arms to secure said retainer to a wall;

an outer arm extending radially outwardly from said base and connected to an inner arm at a joint, said inner arm extending radially inwardly to said pedestal member, and a recess formed in an outer surface of said outer arm to control the bending movement of said radially outer and inner arms; and

a surface of said radially outer arm is ramped, and engages a ramped surface on said retainer and adjacent said joint when said retainer is tightened to a wall, said ramped surface of said outer arm being drawn towards the wall such that said ramped surface adjacent said joint is forced laterally outwardly, and a tip of said joint is forced against an inner face of the wall.

2. An anchoring retainer as recited in claim 1, wherein a pair of said recesses are formed with one inside, and one outside, and upon movement of said arms, said inner recesses causes two ramp surfaces to engage each other and force a tip of said joint to be forced against the wall.

3. An anchoring retainer, substantially as hereinbefore described with reference to the accompanying drawings.

DATED this 19th day of January, 1996
DRY DOCK INDUSTRIES, INC.
By its Patent Attorneys:
DAVIES COLLISON CAVE

AUSTRALIAN PATENT OFFICE 13

48066/93

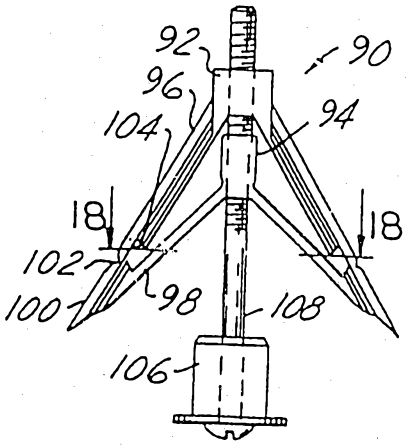

FIG. 1

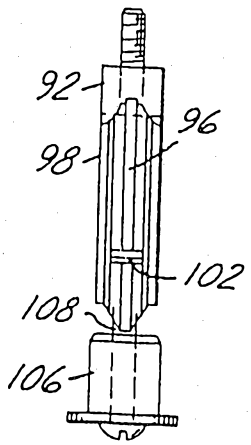

FIG. 2

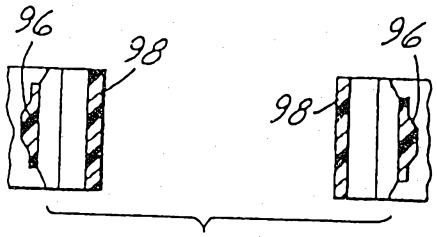

FIG. 3

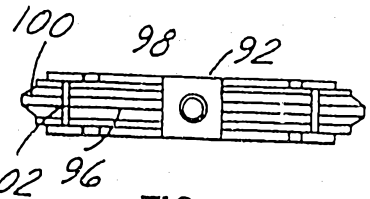

FIG. 4

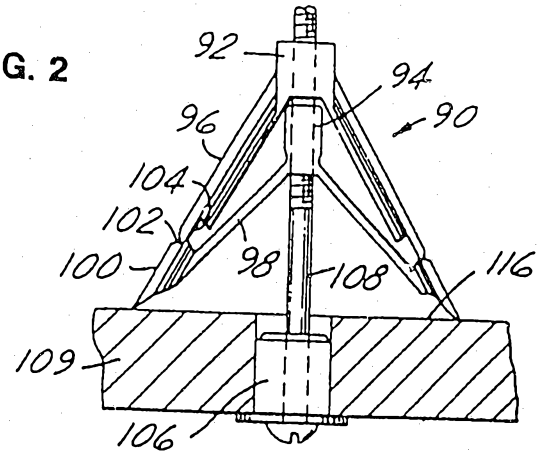

FIG. 5A

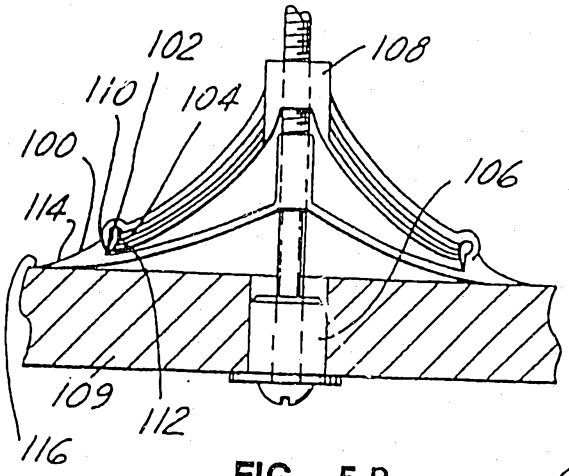

FIG. 5 B

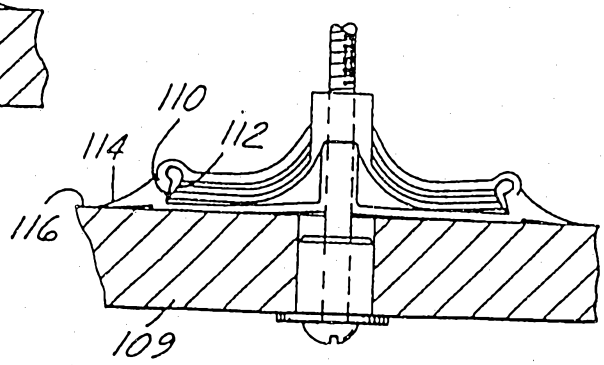

FIG. 6

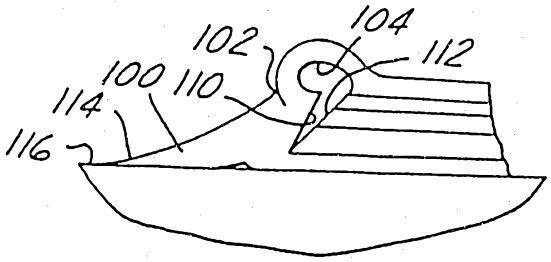

FIG. 7

INTERNATIONAL SEARCH REPORT

International application No.
PCT/US93/07578

A. CLASSIFICATION OF SUBJECT MATTER
IPC(5) :F16B 21/00
US CL :411/344
According to International Patent Classification (IPC) or to both national classification and IPC

B. FIELDS SEARCHED

Minimum documentation searched (classification system followed by classification symbols)
U.S. : 411/344,340,345

Documentation searched other than minimum documentation to the extent that such documents are included in the fields searched

Electronic data base consulted during the international search (name of data base and, where practicable, search terms used)

C. DOCUMENTS CONSIDERED TO BE RELEVANT

Category*	Citation of document, with indication, where appropriate, of the relevant passages	Relevant to claim No.
A	US,A 4,943,253 (SMITH) 24 JULY 1990	1-34
A	US,A 5,002,445 (FISCHER) 26 MARCH 1991	1-34
A	US,A 4,984,946 (PHILLIPS) 15 JANUARY 1991	1-34

☐ Further documents are listed in the continuation of Box C. ☐ See patent family annex.

*	Special categories of cited documents:	"T"	later document published after the international filing date or priority date and not in conflict with the application but cited to understand the principle or theory underlying the invention
"A"	document defining the general state of the art which is not considered to be part of particular relevance	"X"	document of particular relevance; the claimed invention cannot be considered novel or cannot be considered to involve an inventive step when the document is taken alone
"E"	earlier document published on or after the international filing date	"Y"	document of particular relevance; the claimed invention cannot be considered to involve an inventive step when the document is combined with one or more other such documents, such combination being obvious to a person skilled in the art
"L"	document which may throw doubts on priority claim(s) or which is cited to establish the publication date of another citation or other special reason (as specified)	"&"	document member of the same patent family
"O"	document referring to an oral disclosure, use, exhibition or other means		
"P"	document published prior to the international filing date but later than the priority date claimed		

Date of the actual completion of the international search
15 November 1993

Date of mailing of the international search report
02 DEC 1993

Name and mailing address of the ISA/US
Commissioner of Patents and Trademarks
Box PCT
Washington, D.C. 20231
Facsimile No. NOT APPLICABLE

Authorized officer
NEILL WILSON
Telephone No. (703) 308-2168

Form PCT/ISA/210 (second sheet)(July 1992)*