W. H. MILLER.

SOUND BOX.

APPLICATION FILED APR. 20, 1911.

1,068,441. **Patented July 29, 1913.**

Fig. 1

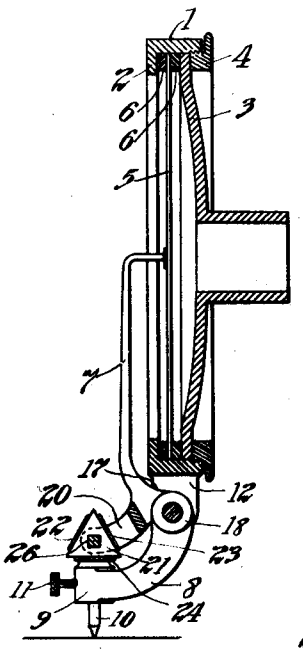

Fig. 2

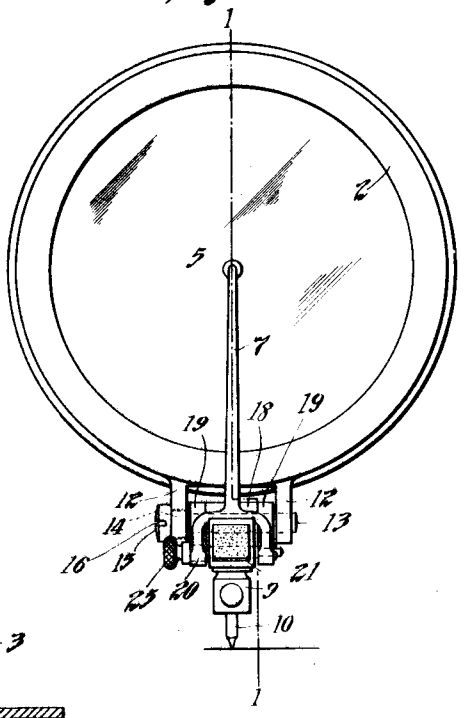

Fig. 3

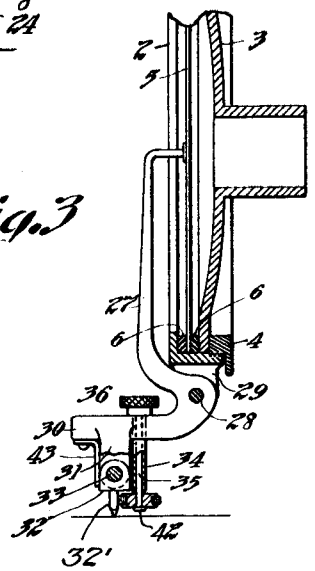

Fig. 4

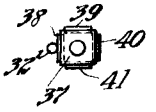

Witnesses:

A. B. Dresslar

Frederick Bachmann

Inventor:

Walter H. Miller

by Frank L. Dyer

his Atty.

UNITED STATES PATENT OFFICE.

WALTER H. MILLER, OF ORANGE, NEW JERSEY, ASSIGNOR TO THOMAS A. EDISON, INCORPORATED, OF WEST ORANGE, NEW JERSEY, A CORPORATION OF NEW JERSEY.

SOUND-BOX.

1,068,441. Specification of Letters Patent. Patented July 29, 1913.

Application filed April 20, 1911. Serial No. 622,397.

To all whom it may concern:

Be it known that I, WALTER H. MILLER, a citizen of the United States, and a resident of Orange, in the county of Essex and State of New Jersey, have invented certain new and useful Improvements in Sound-Boxes, of which the following is a description.

My invention relates to sound boxes particularly of the type adapted for use in connection with disk records having vertically undulating grooves, although its use is not limited to that type.

The principal object of my invention is to provide a sound box having means for regulating the tone or loudness of the reproduction; and in conformity with this object I preferably make the arm or lever connecting the stylus to the diaphragm of a plurality of sections provided with means for yieldingly limiting the relative movement between the same, this means being adjustable or movable, to regulate the extent of movement permitted between the sections of the arm. In my preferred construction, I mount a stop adjustably in one of the sections and secure to this stop a plurality of pieces of yielding elastic material, each of the pieces being of a different elasticity from the others; so that by adjusting the stop, a member of desired elasticity may be interposed between the stop and the section of the arm adapted to abut against the same. During the reproduction, the arm moves more or less as a unit, but the yielding material above referred to according to its elasticity permits a slight relative movement of the sections of the arm to retard or dampen to a desired degree the excessively loud vibrations and thereby modify the tone of the reproduction.

Other objects of my invention will appear more fully in the following specification and appended claims.

In order that my invention may be more fully understood, attention is hereby directed to the accompanying drawings forming a part of this specification and in which—

Figure 1 represents a vertical section taken on the line 1—1 of Fig. 2 of a sound box embodying my invention; Fig. 2 represents a front elevation of the same; Fig. 3 represents a central vertical section of a sound box embodying a modification of my invention, the stylus arm being shown in side elevation and partly broken away; Fig. 4 represents a bottom plan view of the stylus and stop employed in the modification shown in Fig. 3.

In all the views, like parts are designated by the same reference numerals.

The diaphragm support is of common construction and comprises an annular member 1 provided with an inturned flange 2, an outwardly curved disk shaped member 3 extending within the member 1, and an annular ring 4 threaded into the interior of the member 1 in engagement with the periphery of the outer surface of the member 3. The diaphragm 5 is preferably held at its periphery between two gaskets 6 of rubber or other suitable material, these gaskets being clamped between the flange 2 and the periphery of the member 3 by the threaded ring 4.

Referring more particularly to Figs. 1 and 2, the stylus arm or lever comprises an upper section 7 secured to the diaphragm substantially centrally thereof and a lower section 8. The latter section is provided at its lower end with a socket 9 in which is adjustably mounted a stylus 10, a set screw 11 being threaded into the socket 9 and adapted to engage the stylus to secure the latter in adjusted position. Depending from the lower portion of the member 1 are a plurality of spaced parallel lugs or projections 12 provided with alined openings adapted to receive a pivot 13, the opening in the left hand lug being larger than that in the right hand lug and being screw threaded to cooperate with the enlarged threaded portion 14 on the pivot. At its extreme left hand end, the pivot is provided with a headed portion 15 which engages the outer surface of the left hand lug 12, a slot 16 being provided in the said headed portion to facilitate adjustment of the pivot. The lower portion of the arm 7 is provided with a rearwardly extending projection 17 (see Fig. 1) provided at its end with a hub-like portion 18 pivotally mounted on the member 13 between and in engagement with the parallel ears or lugs 19 at the upper end of the section 8. These last named ears or lugs are likewise mounted on the pivot 13 and extend in close proximity to the inside faces of the lugs 12, being held against movement longitudinally of the pivot by these last named lugs. With this construction the

axis of the relative pivotal movement of the sections 7 and 8 is coincident with the axis of the bodily pivotal movement of the stylus arm or lever during the reproduction of a record.

In order to limit the relative movement between the sections 7 and 8 of the stylus arm during the reproduction, the section 7 is provided at its lower end with a forwardly extending forked portion 20 within which is rotatably mounted a stop 21 having a plurality of flat faces to which are respectively secured pieces or strips 22, 23 and 24 of yielding elastic material. In order to permit rotation of the member 21 from the knurled head 25 secured to the end of the pivot 26 which supports the member 21, the said pivot is preferably made angular between its ends as shown in Fig. 1 and cylindrical at its ends where it engages in the fork 20, the central portion of the pivot interfitting closely with the member 21. In the drawing I have shown the member 21 as provided with three flat faces for supporting the yielding elastic material, but obviously I may provide the said member with any desired number of faces for this purpose. By rotating the knurled head 25 any desired one of the pieces 22, 23 and 24 may be brought into engagement with the upper horizontal surface of the socket 9. During the reproduction of a record, the stylus arm normally moves as a unit, the vibrations being transmitted through the strip of yielding material to the upper section of the stylus arm and thence to the diaphragm; but by reason of the interposition of the yielding elastic strips or pieces between the sections of the said arm, the loud vibrations are partially retarded or dampened by the said strip, the extent of such dampening depending upon the elasticity of the yielding material. I have found that cork, rubber and felt are suitable materials for the yielding elastic pieces 22, 23 and 24.

In the modification shown in Fig. 3, the upper section 27 of the stylus arm is secured to the diaphragm substantially at the center thereof and is mounted on a pivot 28 supported by spaced downturned lugs 29 in a manner similar to that described above for the form of my invention shown in Figs. 1 and 2. The lower portion of the section 27 of the stylus arm is provided with a forwardly extending horizontal portion 30 provided with a downwardly directed forked portion 31 between which the support 32 for the stylus 32′ is pivotally supported by a pivot 33. Secured to and extending downwardly from the portion 30 of the stylus arm is a tubular member 34 in which is rotatably mounted a rod or spindle 35 provided at its upper end with a knurled head 36 engaging the upper surface of the portion 30. The spindle has secured thereto at its lower end by friction or in any other suitable manner, a rectangular block 37 having in its lateral faces, a plurality of recesses in which are respectively mounted inserts 38, 39, 40 and 41 of yielding material similar to that described above in connection with Figs. 1 and 2, each of the inserts being of different elasticity from the others. The lower end of the spindle 35 is upset as shown at 42 to prevent downward movement of the block 37. A spring 43 or other suitable means is secured to the portion 30 of the section 27 and engages the stylus support 32 to yieldingly hold the stylus in engagement with the strip of yielding material adjacent the same. As in the operation of the device shown in Figs. 1 and 2, the stylus arm in the modified structure described above normally vibrates as a unit during the reproduction of the record, the vibrations except so far as they are dampened by the elastic yielding material being transmitted through the said yielding material to the upper section 27 of the stylus arm and thence to the diaphragm. By rotation of the knurled head 36 any one of the pieces of yielding material may be brought into operative position so that the tone or loudness of the reproduction may be varied at will.

While I have shown certain preferred embodiments in my invention, numerous changes may be made therein without departing from the spirit of my invention; and I wish, therefore, not to be limited to the exact details shown and described.

What I claim as new and desire to secure by Letters Patent of the United States is as follows:

1. In a device of the class described, the combination of vibratory means, means supporting the same, a stylus, and means for transmitting the vibrations of said stylus to said vibratory means, said vibration transmitting means comprising a plurality of elastic means arranged to be selectively placed in operative position to modify the vibrations transmitted from the stylus to the vibratory means, said elastic means being adapted to modify said vibrations to different extents, substantially as described.

2. In a sound box, the combination of vibratory means, means supporting the same, a stylus, and means for transmitting the vibrations of said stylus to said vibratory means, said vibration transmitting means comprising a plurality of elastic means of different elasticities arranged to be selectively placed in operative position to modify the vibrations transmitted from the stylus to the vibratory means, substantially as described.

3. In a sound box, the combination of vibratory means, means for supporting the same, a stylus arm connected with said vi-

bratory means and having a plurality of movably connected sections, and a stop mounted on one of said sections and provided with a plurality of elastic means, each of different elasticity from the others, said stop being adjustable to place any desired one of said elastic means in contact with the adjacent section of said arm, substantially as described.

4. In a sound box, the combination of vibratory means, means for supporting the same, a stylus arm connected with said vibratory means and having a plurality of pivotally connected sections, and a stop mounted on one of said sections and provided with a plurality of elastic means, each of different elasticity from the others, said stop being adjustable to place any desired one of said elastic means in contact with the adjacent section of said arm, substantially as described.

5. In a sound box, the combination of vibratory means, means for supporting the same, a stylus arm connected with said vibratory means and having a plurality of movably connected sections, a stop mounted on one of said sections and provided with a plurality of elastic means each of different elasticity from the others, and means for adjusting said stop to place any desired one of said elastic means in contact with the adjacent section of said arm, substantially as described.

6. In a sound box, the combination of vibratory means, means for supporting the same, and a stylus arm connected with said vibratory means, and having a plurality of movably connected sections provided with means for limiting the relative movement between the same, the said means comprising an adjustable member carrying a plurality of pieces of elastic yielding material each of different elasticity from the others, any one of said pieces being adapted to be placed in contact with the adjacent section of the arm, substantially as described.

7. In a sound box, the combination of vibratory means, means for supporting the same, and a stylus arm connected with said vibratory means, and having a plurality of movably connected sections provided with means for limiting the relative movement between the same, the said means comprising a rotatable member carrying a plurality of pieces of elastic yielding material each of different elasticity from the others, any one of said pieces being adapted to be placed in contact with the adjacent section of the arm, substantially as described.

8. A stylus arm having a plurality of movably connected sections provided with means for limiting the relative movement between the same, said means comprising a member carrying a plurality of elastic means, each of different elasticity from the others, said member being adjustable to place any desired one of said elastic means in contact with the adjacent section of said arm, substantially as described.

9. A stylus arm having a plurality of pivotally connected sections provided with means for limiting the relative movement between the same, the said means comprising an adjustable member carrying a plurality of pieces of elastic material each of different elasticity from the others, and means for adjusting the said member to place any desired one of said pieces of elastic material in contact with the adjacent section of the arm, substantially as described.

10. In a sound box, the combination of vibratory means, means supporting the same, a stylus arm connected with said vibratory means and arranged to oscillate about a given axis, said stylus arm comprising sections pivotally movable relatively to each other about said axis, one of said sections being provided with a stop, and elastic means interposed between said stop and a second section of said arm, substantially as described.

11. In a sound box, the combination of vibratory means, means supporting the same, a stylus arm connected with said vibratory means and arranged to oscillate about a given axis, said arm comprising sections pivotally movable relatively to each other about said axis and one of said sections being provided with a stop yieldingly coacting with another section of said arm to limit the relative movement of said sections, substantially as described

12. In a sound box, the combination of vibratory means, means supporting the same, a stylus arm connected with said vibratory means and arranged to oscillate about a given axis, said arm comprising sections pivotally movable relatively to each other about said axis and one of said sections being provided with a stop coacting with another section of said arm to limit the relative movement of said sections, substantially as described.

This specification signed and witnessed this 18th day of April, 1911.

WALTER H. MILLER.

Witnesses:
FREDERICK BACHMANN,
ANNA R. KLEHM.

Copies of this patent may be obtained for five cents each, by addressing the "Commissioner of Patents, Washington, D. C."