United States Patent

Grant

[15] **3,675,028**

[45] **July 4, 1972**

[54] IMAGE INTENSIFIER WITH ELECTROLUMINESCENT PHOSPHOR

[72] Inventor: **John M. Grant,** Granada Hills, Calif.

[73] Assignee: **International Telephone and Telegraph Corporation,** New York, N.Y.

[22] Filed: **Aug. 13, 1969**

[21] Appl. No.: **849,682**

[52] **U.S. Cl.** .....**250/213 VT,** 313/108 A, 315/11

[51] **Int. Cl.**.....**H01j 31/50**

[58] **Field of Search** .....250/213, 213 VT; 313/108 A; 315/11

[56] **References Cited**

UNITED STATES PATENTS

3,243,642 3/1966 Gebel 315/11

3,590,253 6/1971 Novice et al.....313/108 A

Primary Examiner—Benjamin A. Borchelt

Assistant Examiner—H. A. Birmiel

Attorney—C. Cornell Remsen, Jr., Walter J. Baum, Paul W. Hemminger, Percy P. Lantzy and Thomas E. Kristofferson

[57] **ABSTRACT**

The subject dealt with herein concerns an intensifier tube which utilizes a channel-type electron multiplier. It is conventional to direct the output of such a multiplier onto an aluminized phosphor screen. However, poor resolution and aluminum layer damage results. According to this disclosure, a plate is provided having electroluminescent phosphor. An AC voltage is then applied between the multiplier and across the phosphor. Resolution is thereby improved and no screen damage results.

8 Claims, 3 Drawing Figures

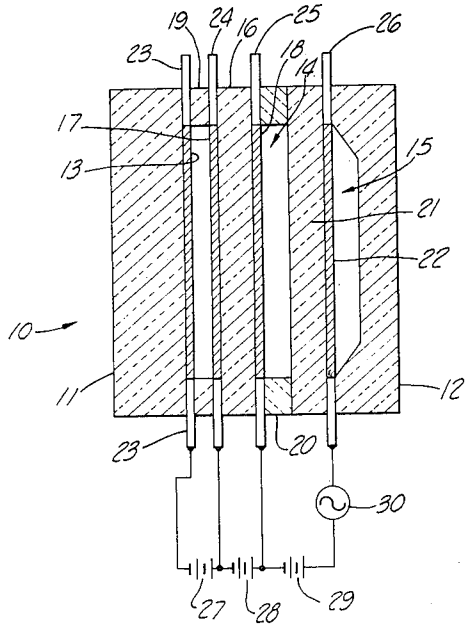

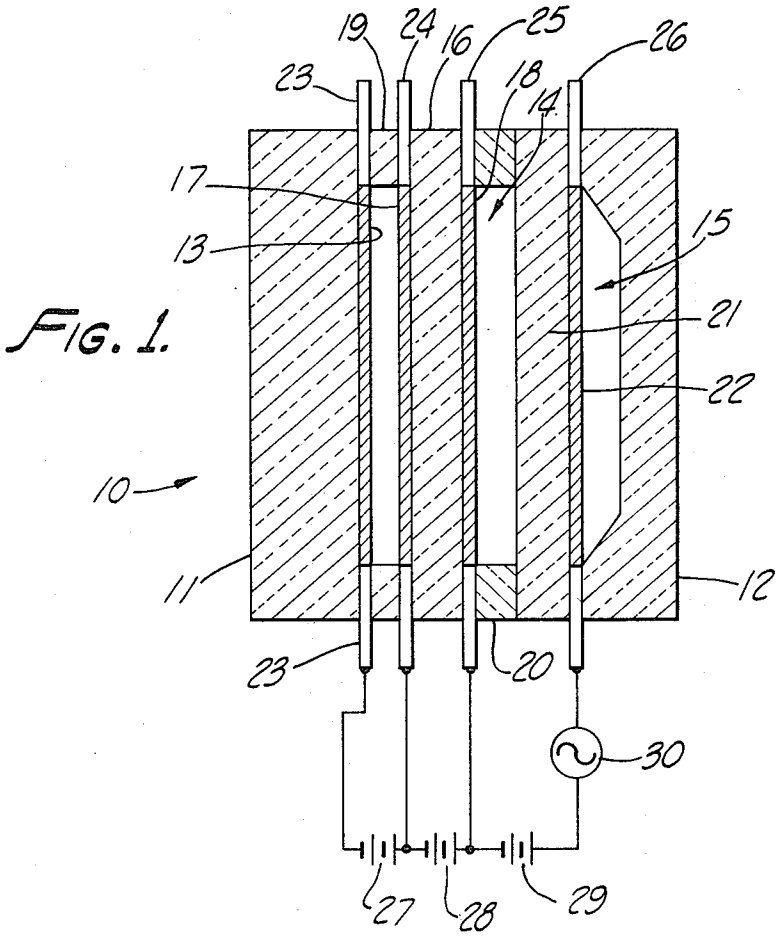

FIG. 1.

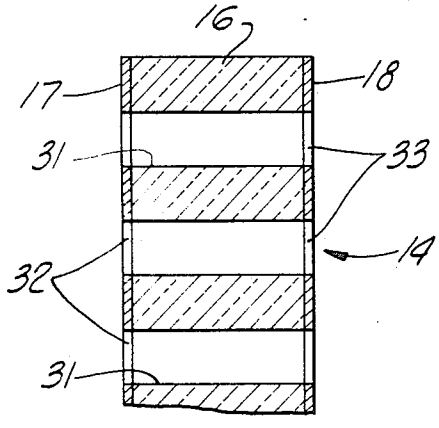

FIG. 2.

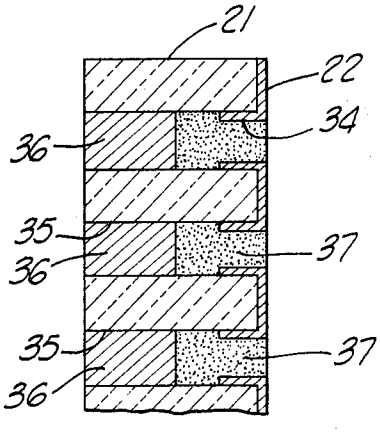

FIG. 3.

INVENTOR
JOHN M. GRANT

BY

ATTORNEY

IMAGE INTENSIFIER WITH ELECTROLUMINESCENT PHOSPHOR

BACKGROUND OF THE INVENTION

This invention relates to displays and, more particularly, to improved means for converting the output of a channel-type electron multiplier into a light image.

In the past, image intensifiers have employed a channel-type electron multiplier to receive primary electrons from a photocathode and to deliver secondary electrons to a phosphor screen having an aluminized layer to shade the screen from light passing through and around the photocathode.

For the phosphor to function properly, the phosphor must be kept at a rather high positive potential relative to the multiplier. The strong electric field therebetween then frequently tears away portions of the aluminum layer. In addition, the phosphor must be spaced some distance from the multiplier in order to reduce the electric field strength. However, this spacing reduces or limits resolution because the electrons emitted from the multiplier spread in traveling from the multiplier to the phosphor.

SUMMARY OF THE INVENTION

In accordance with the device of the present invention, the above-described and other disadvantages of the prior art are overcome by providing a plate in lieu of the aluminized phosphor screen. The plate carries light-shaded electroluminescent phosphor. Thus, when an AC source of potential is connected between the multiplier and the plate, the electron flow from the multiplier determines the voltage drop across the electroluminescent phosphor and, therefore, the amount of light it gives off.

The electroluminescent phosphor does not require a high DC or AC potential. The plate may, thus, be placed very close to the multiplier for exceptionally good resolution. This is true because the electric field created by the AC voltage is very small because the voltage itself is small. Still further, the aluminum tearing problem is eliminated not only because no aluminum is employed, but also because the multiplier-to-plate electric field is very small.

The above-described and other advantages of the invention will be better understood from the following description when considered in connection with the accompanying drawings.

BRIEF DESCRIPTION OF THE DRAWINGS

In the drawings, which are to be regarded as merely illustrative:

FIG. 1 is a vertical sectional view through an image intensifier constructed in accordance with the present invention;

FIG. 2 is an enlarged sectional view through a conventional channel-type electron multiplier; and

FIG. 3 is a sectional view through a plate constructed in accordance with the present invention.

DESCRIPTION OF THE PREFERRED EMBODIMENT

In FIG. 1, an image intensifier is indicated at **10**. Clear glass layers are provided at **11** and **12**. A photocathode **13** is coated on the internal surface with layer **11**. A channel-type electron multiplier **14** is located between photocathode **13** and a plate **15**. Multiplier **14** has a glass substrate **16** on which electrodes **17** and **18** are coated. Multiplier **14** and layer **11** are spaced apart by a glass ring **19**. Plate **15** includes a glass substrate **21** and an electrode **22**.

Photocathode **13** has electrical leads **23**. Electrode **17** has leads **24**. Electrode **18** has leads **25**. Electrode **22** has leads **26**.

An end view of tube **10** taken from the right or the left is circular. Similarly, photocathode **13** is circular as are electrodes **17**, **18**, and **22**.

Electrode **17** is maintained positive with respect to photocathode **13** by a source of potential **27**. Electrode **18** is maintained positive with respect to electrode **17** by a source of potential **28**. A DC source of potential **29** and an AC source of potential **30** are connected from electrode **18** in series to electrode **22**.

Multiplier **14** is shown in an enlarged view in FIG. **2**. Multiplier **14** may be entirely conventional. Note will be taken that substrate **16** has holes **31** therethrough. Electrode **17** has holes **32** in registration with holes **31**. Electrode **18** has holes **33** also in registration with holes **31**.

As shown in FIG. **3**, substrate **21** may be identical to substrate **16**, although this is not necessarily the case. Either one of electrodes **17** or **18** or both may be like electrode **22** or vice versa. Electrode **22** has a cylindrical portion **34** which extends partially into holes **35** in substrate **21**. Indium slugs **36** are melted or extruded part way into holes **35**. The indium slugs **36** constitute bodies of an opaque material which bodies are positioned to shade the phosphor **37** from light passing through and around the photocathode **13**. Electroluminescent phosphor particles are then pressed into holes **35** as indicated at **37**.

The tube **10** may be entirely conventional from layer **11** to electrode **18**. In the operation of the tube **10**, light from an object will cause primary electrons to leave photocathode **13**. The current density over the area of photocathode **13** will then vary in accordance with a scene being viewed. The primary electrons will then be accelerated toward multiplier **14** and enter holes **31**. As is conventional, the surface of holes **31** are treated to support secondary emission. As electrons bounce back and forth from side to side in holes **31**, an increased current density is achieved. Electrons will then travel out of holes **31** and will be accelerated toward electrode **22**. The electrons emitted from one hole will then act as an elemental resistance. The electroluminescent phosphor **37** will act as a capacitor. The density of each electron stream will then determine the resistance thereof and, therefore, the portion of the voltage supplied by source **30** which is impressed across electroluminescent phosphor **37**. Phosphor **37** will then glow in proportion to the output current of multiplier **14**.

As distinguished from the phosphor which requires a high DC voltage, electroluminescent phosphor **37** requires a relatively low voltage. This reduces the magnitude of the electric field between electrodes **18** and **22**. The aluminum tearing problem of the prior art, thus, is eliminated. More over, the aluminum itself may be eliminated. Still further, the low voltage required for phosphor **37** makes it possible to locate plates **15** unusually close to multiplier **14** with exceptionally good resolution.

In accordance with the foregoing description, it will be understood that slugs **36** need not be indium. Further, the particular shape of the structures shown and the particular materials described may be varied without departing from the invention.

What is claimed is:

1. An image intensifier comprising: a channel-type electron multiplier having first and second layer electrodes; a photocathode adjacent said first electrode; a plate having first and second opposite sides, said first side being positioned adjacent said second electrode; said plate having electroluminescent phosphor nearer said second side thereof, said plate having an opaque material positioned to shade said phosphor from light passing through and around said photocathode, said plate having a third layer electrode on said second side thereof; and power means to supply operating voltages to said photocathode and to said electrodes.

2. The invention as defined in claim **1**, wherein said power means includes electrical leads for said photocathode and said electrodes.

3. The invention as defined in claim **1**, wherein said power means includes an AC source of potential connected between said second and third electrodes.

4. The invention as defined in claim **3**, wherein said multiplier and said plate each have identical first and second glass substrates, respectively, said first substrate having holes therethrough, said first and second electrodes having holes in

registration with said first substrate holes, said third electrode having holes in registration with said second substrate holes, said second substrate holes having particles of said phosphor pressed part way thereinto from said one side, said opaque material including indium slugs filling the remainder of the space in said second substrate holes, said power means also including means to maintain said first and second electrodes at successively higher DC voltages than that of said photocathode.

5. The invention as defined in claim 1, wherein said plate is a dielectric sheet having holes therethrough, said third electrode having holes therethrough in registration with those of said sheet, said phosphor filling said holes part way nearer said one side of said plate, said opaque material being located in said holes nearer the other side of said plate.

6. The invention defined in claim 5, wherein said means includes an AC source of potential connected between said second and third electrodes.

7. The invention as defined in claim 6, wherein said phosphor is in the form of particles pressed into said sheet holes, said opaque material including indium filling the remainder of said sheet holes.

8. The invention as defined in claim 7, wherein said power means includes means for maintaining said first and second electrodes at successively higher DC potentials and higher than that of said photocathode.

* * * * *