US 20100062682A1

(19) **United States**

(12) **Patent Application Publication**

Bering

(10) **Pub. No.: US 2010/0062682 A1**

(43) **Pub. Date: Mar. 11, 2010**

(54) **LIGHTWEIGHT MODULAR PLAY STRUCTURE**

(76) Inventor: **Christopher Bering**, Waukesha, WI (US)

Correspondence Address:
ABSOLUTE TECHNOLOGY LAW GROUP LLC
135 W. WELLS ST., SUITE 518
MILWAUKEE, WI 53203 (US)

(21) Appl. No.: **12/205,182**

(22) Filed: **Sep. 5, 2008**

Publication Classification

(51) **Int. Cl.**
A63H 33/00 (2006.01)

(52) **U.S. Cl.** **446/487**

(57) **ABSTRACT**

A stable, safe, lightweight modular play structure for encouraging and supporting ambulatory motion by one or more infants and which may be selectively assembled in a variety of configurations in an enclosed, modular unit

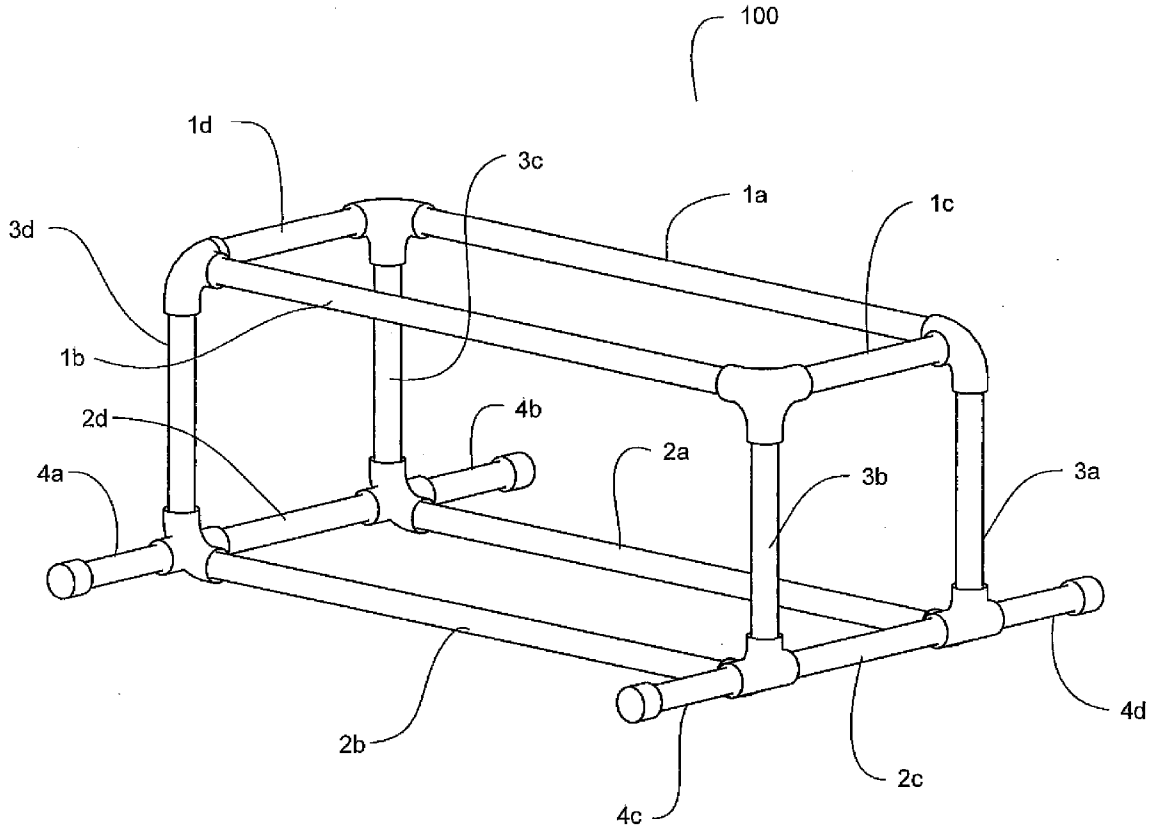

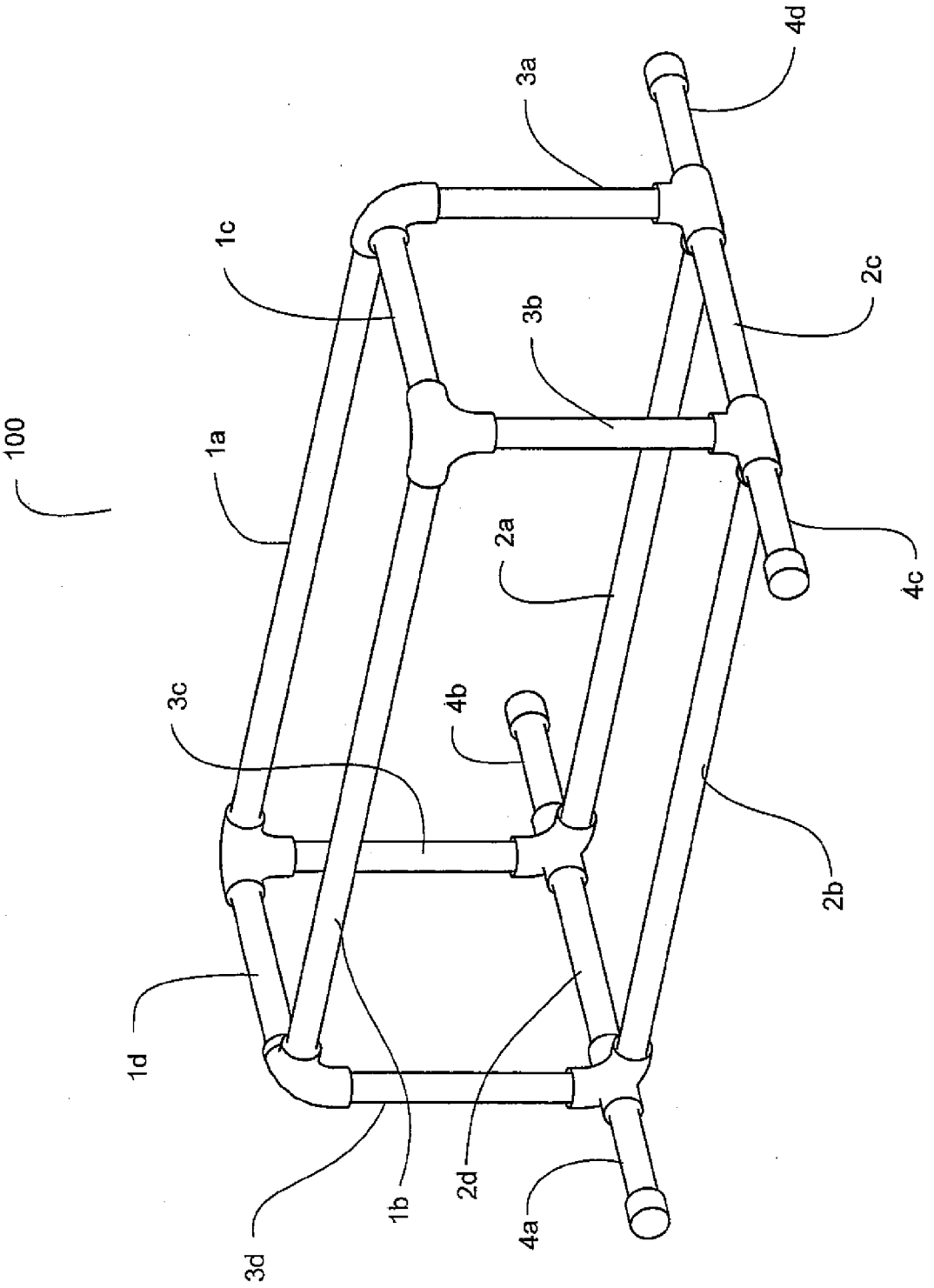

FIG. 1

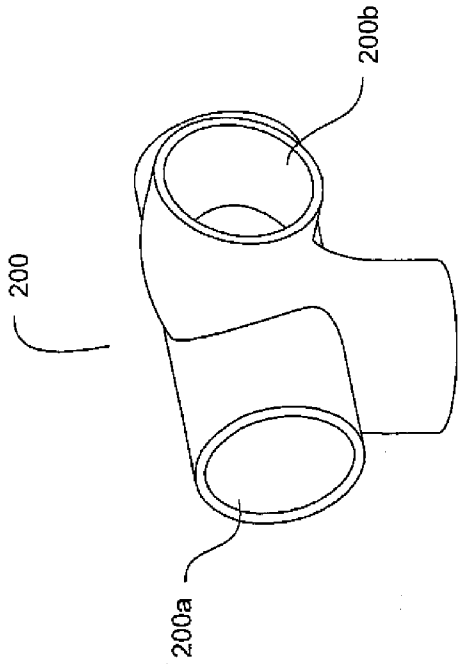

FIG. 2c

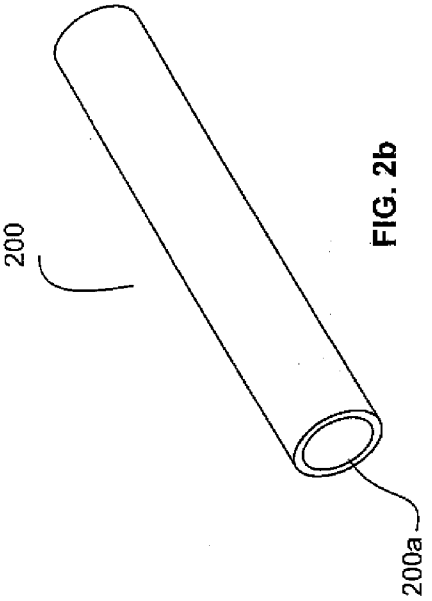

FIG. 2b

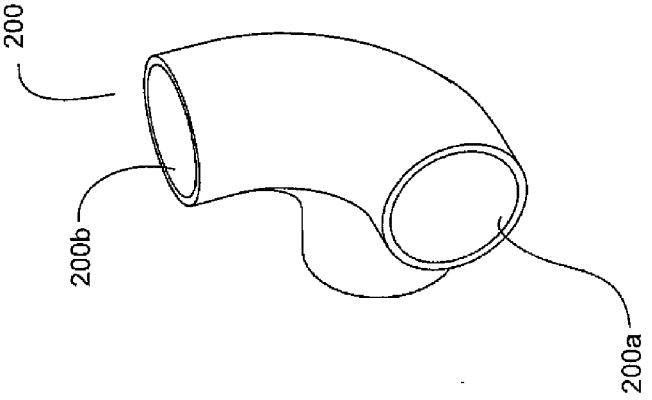

FIG. 2a

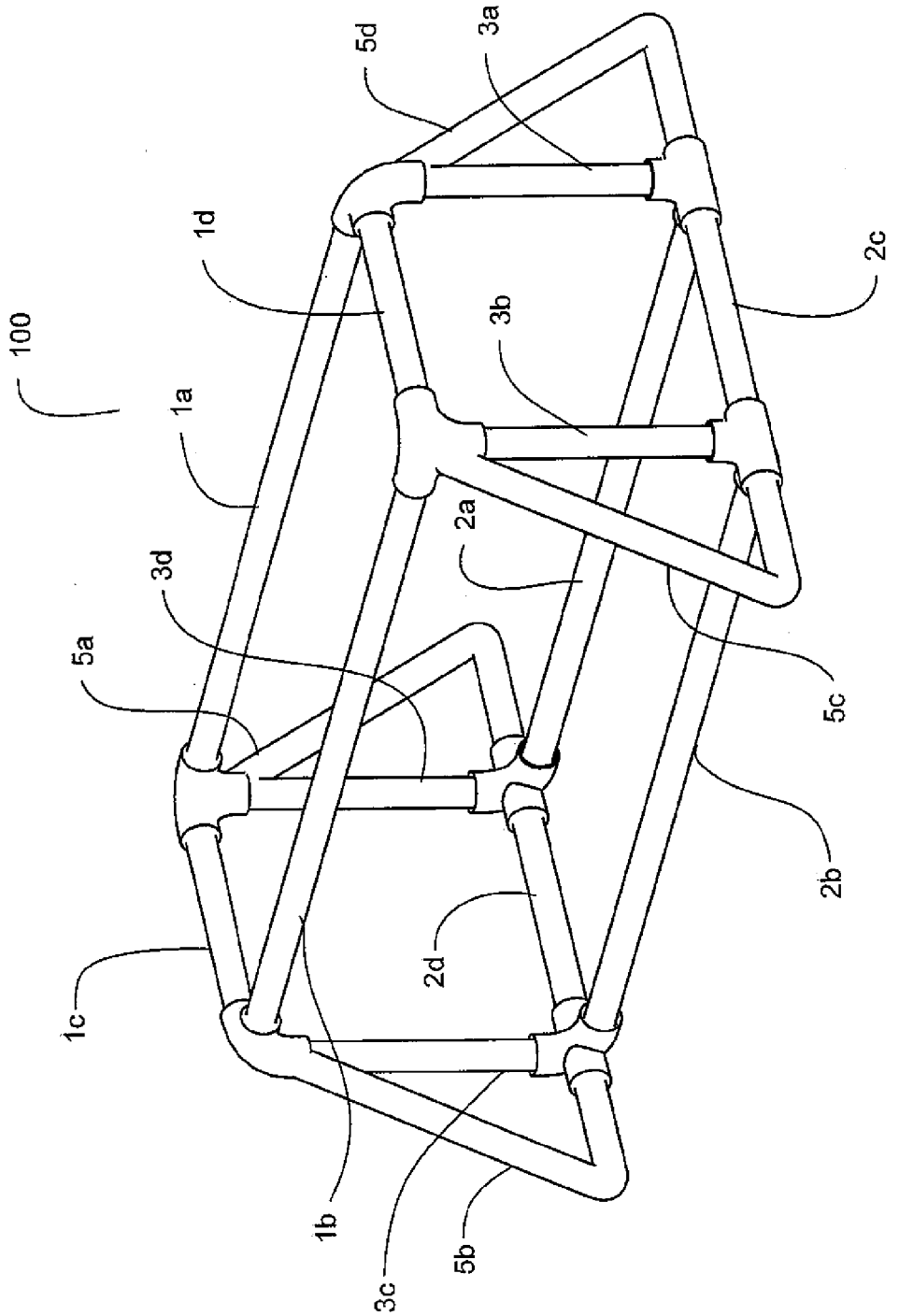

FIG. 3a

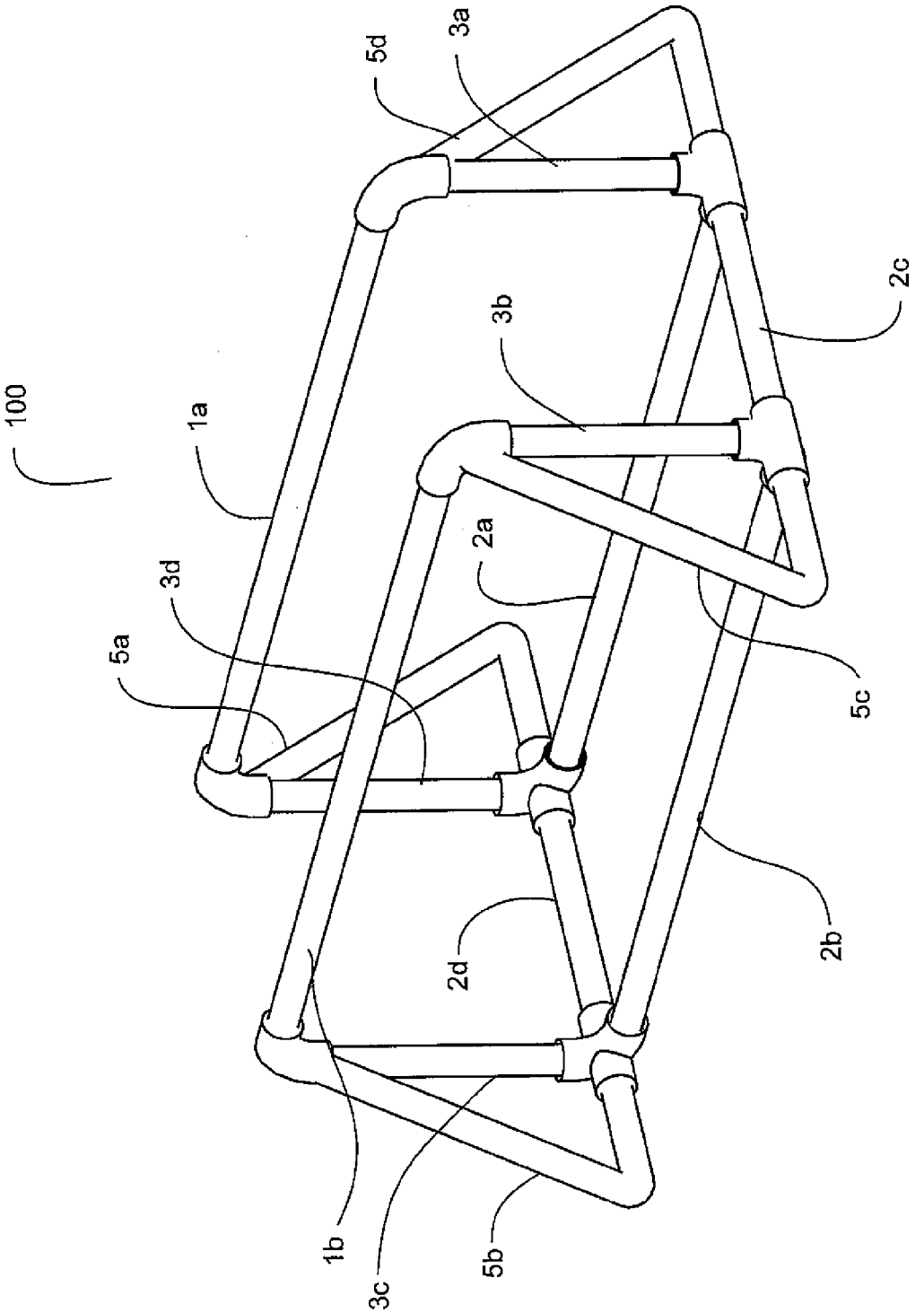

FIG. 3b

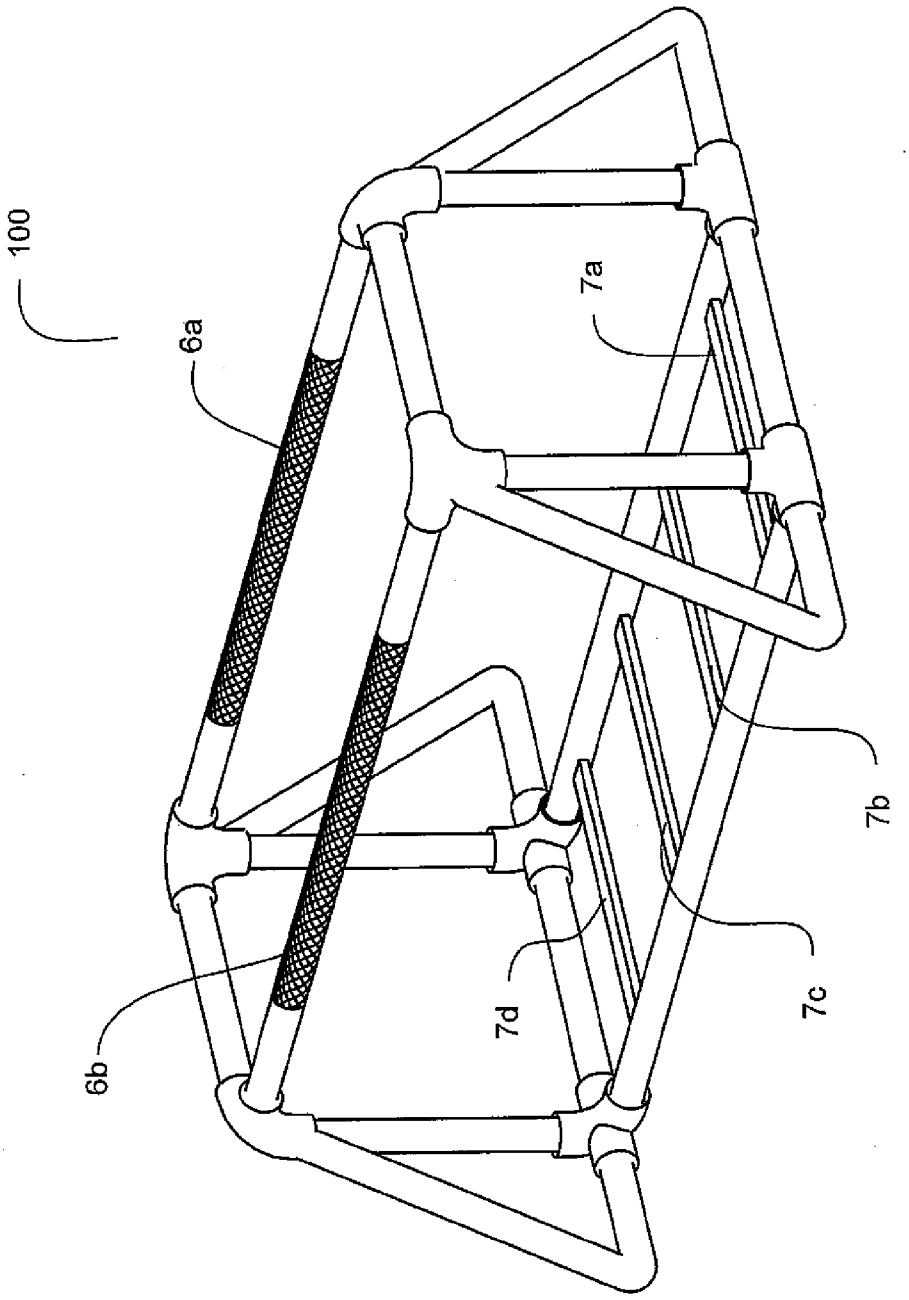

FIG. 4

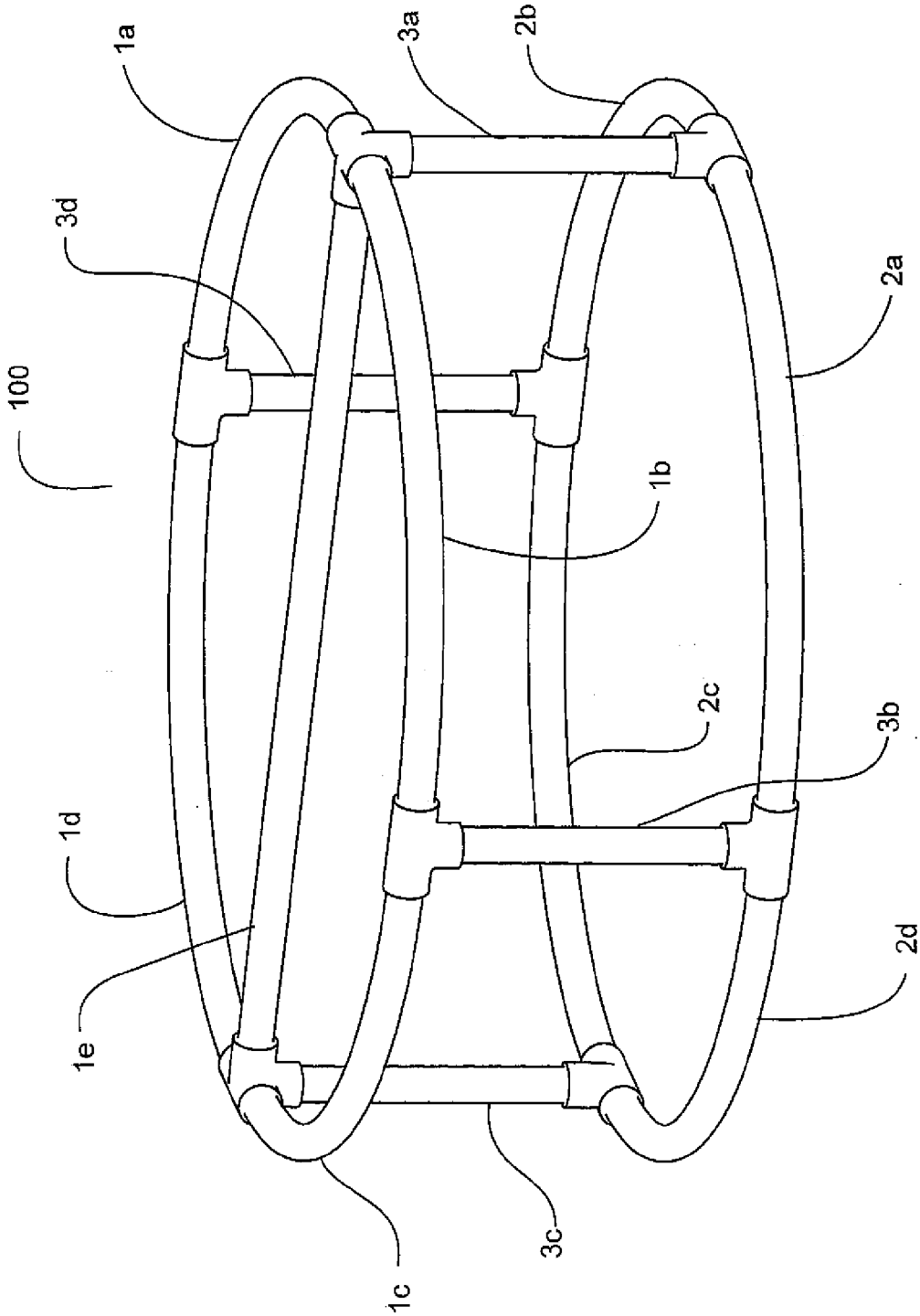

FIG. 5

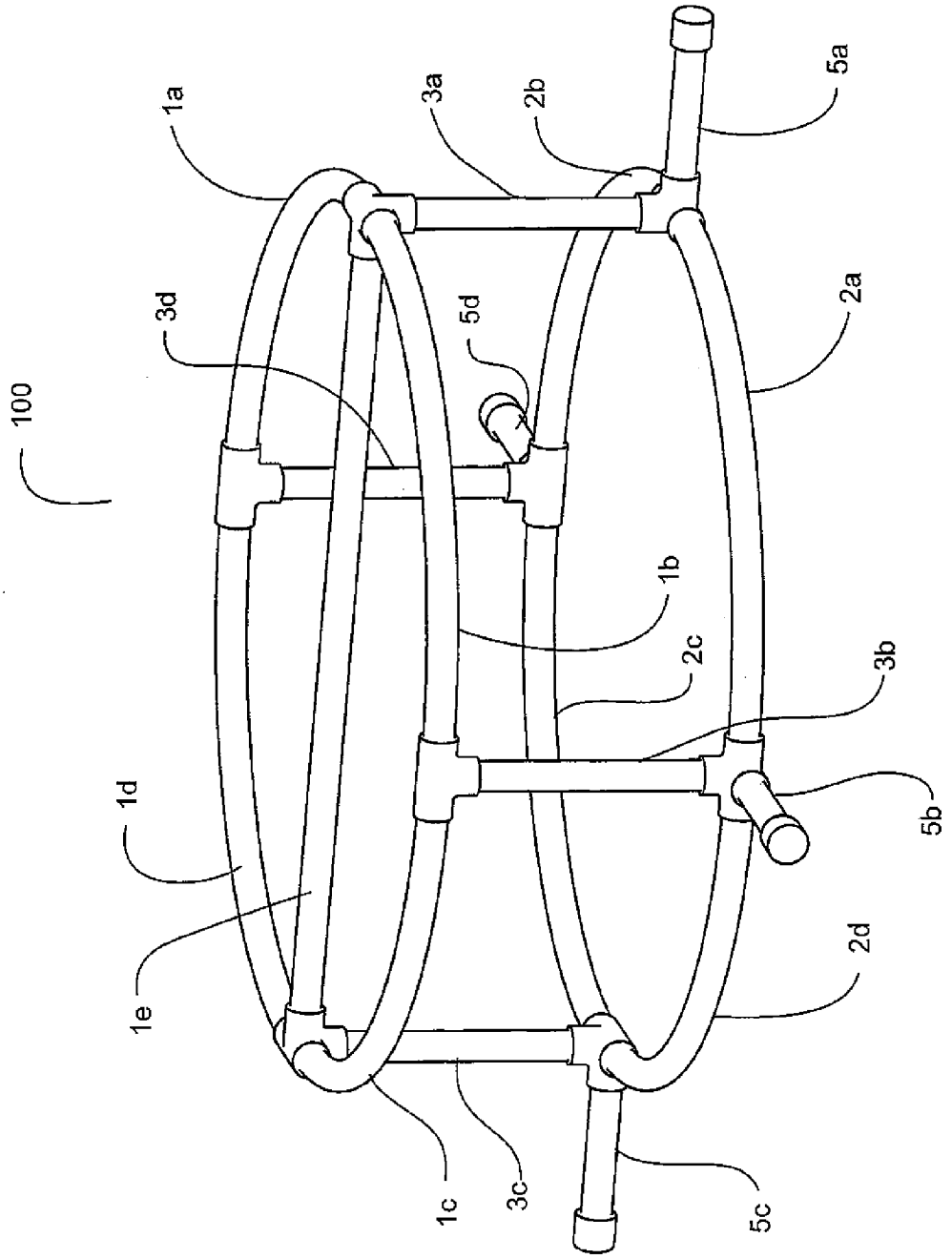

FIG. 6

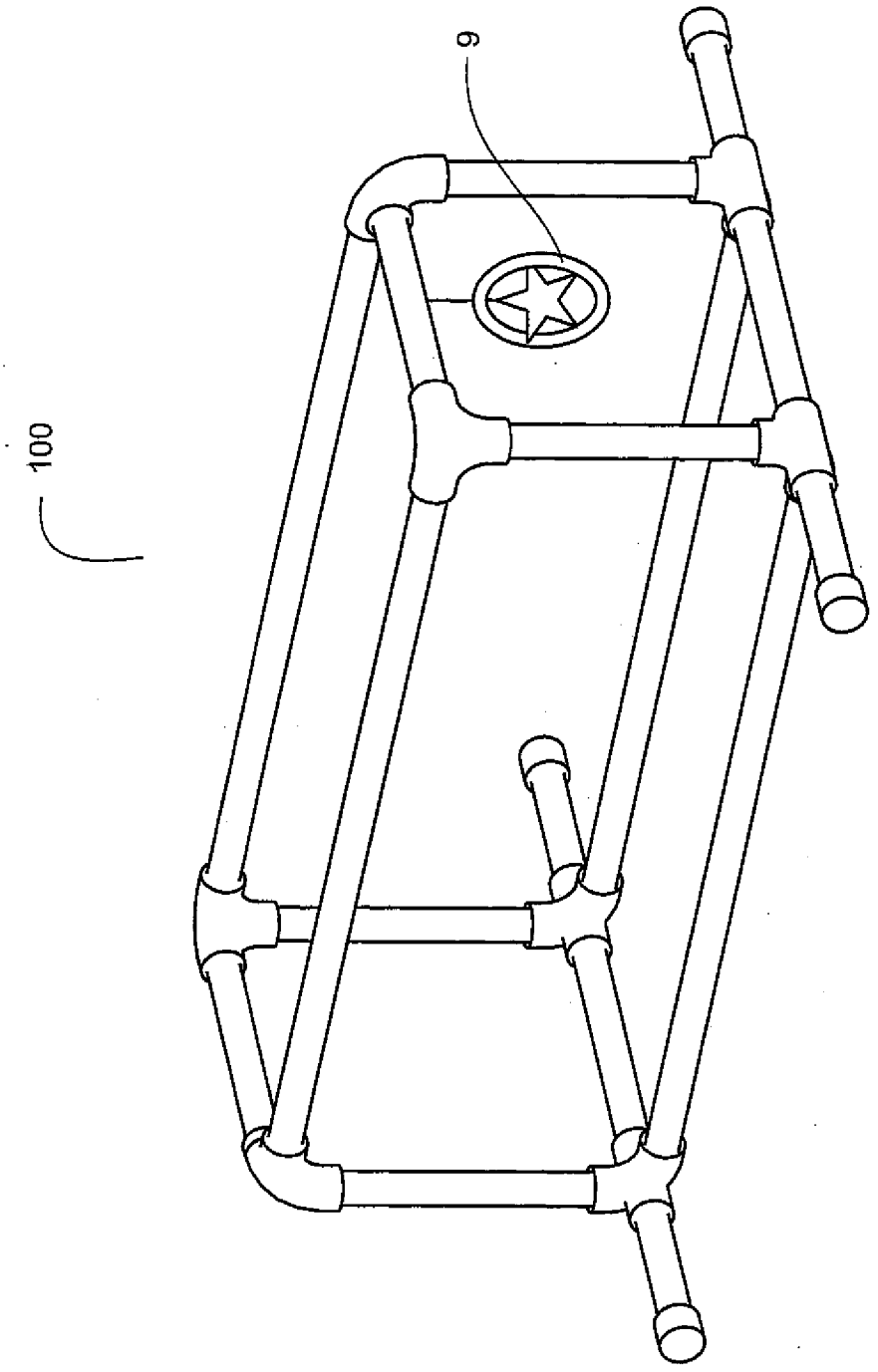

FIG. 7

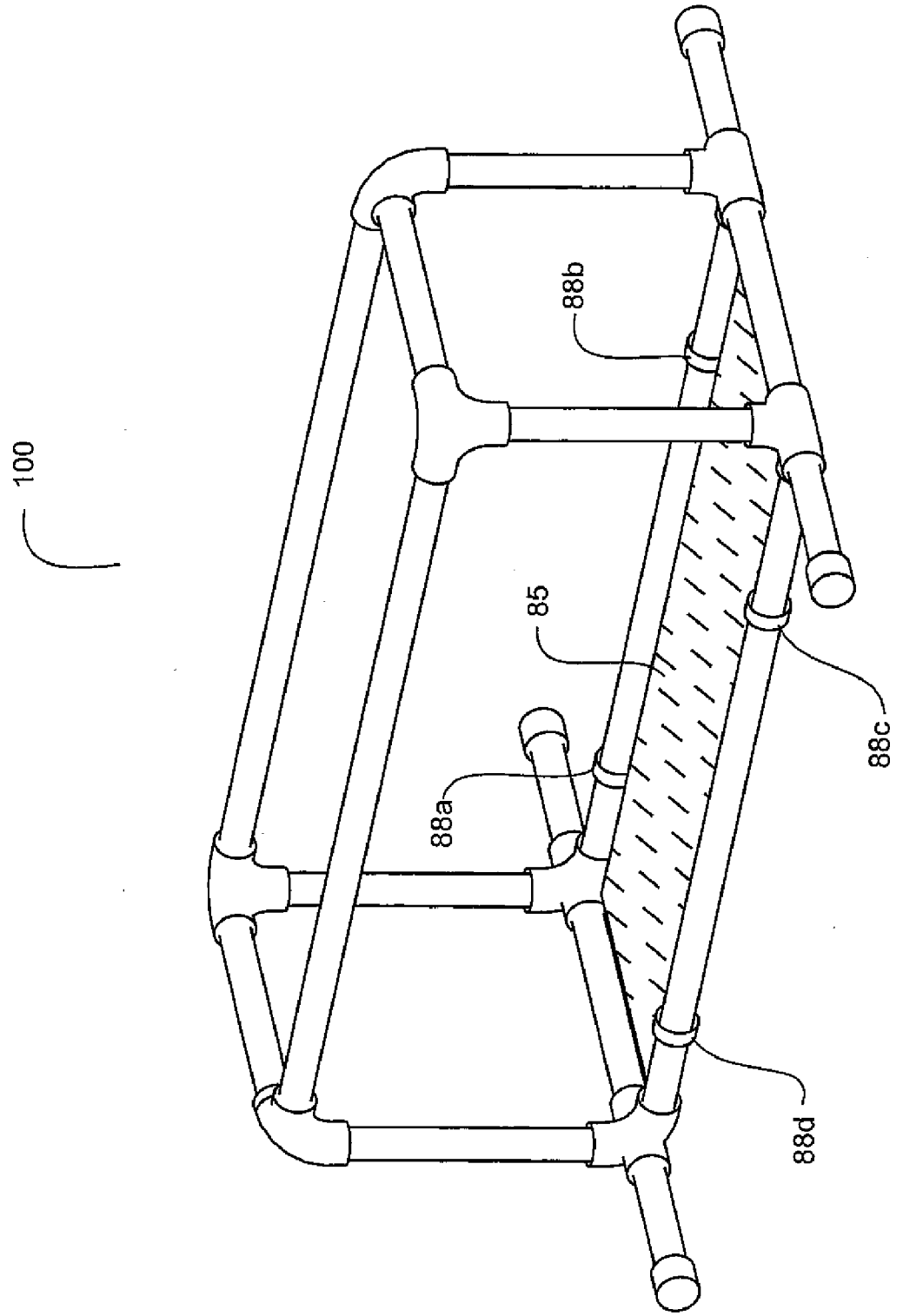

FIG. 8

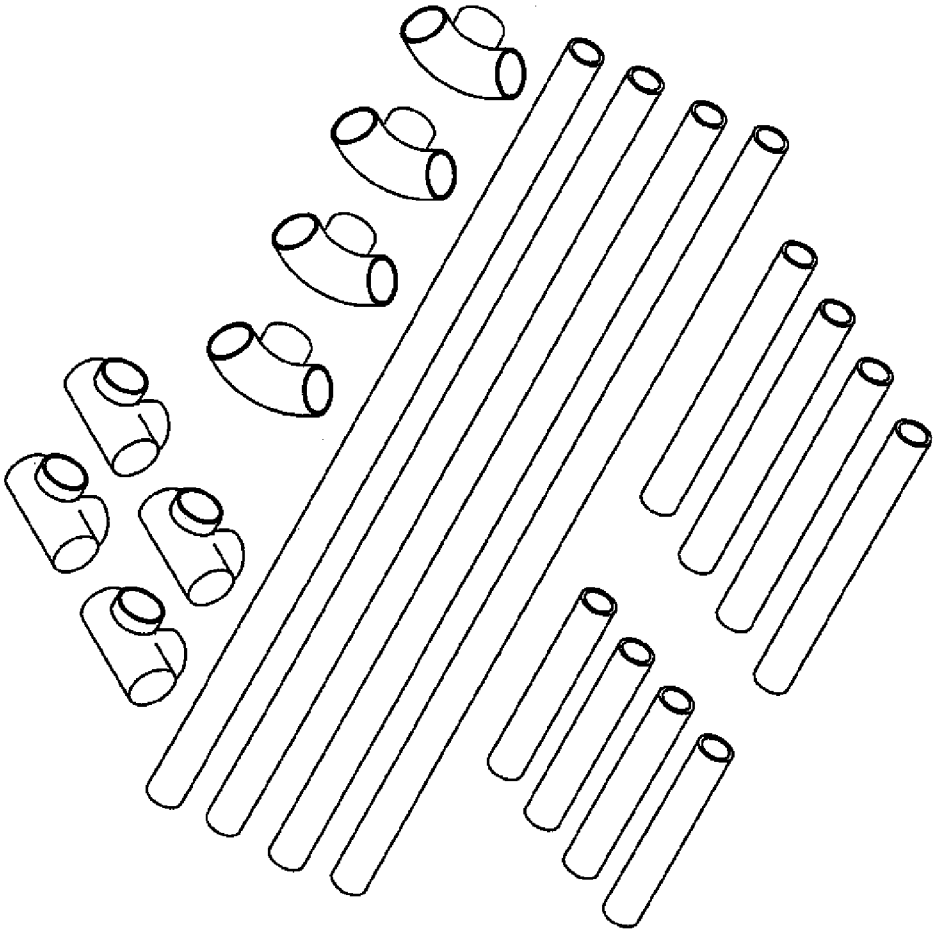

FIG. 9

LIGHTWEIGHT MODULAR PLAY STRUCTURE

FIELD OF INVENTION

[0001] This invention relates generally to the field of toys for infants in the developmental stages of crawling and early walking.

BACKGROUND

[0002] There are a number of devices known in the prior art as walkers or baby seats, in which babies and toddlers are seated or positioned. These devices are recreational toys, and are engaging to the baby or toddler because they allow the infant to sit in an upright, seated or partially upright position. If wheels are attached to the device, the device allows the infant to be more mobile at an early age.

[0003] For example, the company Toys 'R Us advertises more than fifty walkers, baby seats and baby gyms (all of which are referred to herein, generically, as "walkers"). Many of these devices can be located on the company's website located at www.toysrus.com. Toys 'R Us carries a wide range of commercially available walkers by numerous manufacturers competing in the established and crowded market for walkers.

[0004] Walkers which are taught in issued patents generally fall into two categories: wheeled devices or stationary (seat) devices. A typical example of a walker having wheels is taught in U.S. Pat. No. 5,342,072 by Prasad (the '072 patent). Walkers with wheels, such as that disclosed in the '072 patent, increase the mobility of a child and thus are very exciting and entertaining to the child. However, they are also very dangerous. The American Academy of Pediatrics (AAP) recommends that walkers be banned in the United States because mobile baby walkers put children at risk for injury and provide no clear benefits from using a baby walker, in part because the wheels diminish the need for the child to use their muscles.

[0005] According to the AAP, each year thousands of children are treated in hospital emergency rooms for walker-related injuries. Walker injuries can be serious. Typical walker injuries include skull fractures, bleeding inside the head, or broken legs and arms from falls, especially down stairs. Also, walkers are responsible for significant pinching or compression injuries to fingers and toes, or other-types of injuries due to tipping of the device.

[0006] Often, walker injuries occur when a parent or care provider is at home watching the child. A baby in a walker can move at a speed of three feet per second. Baby walkers put children at increased risk for burns, poisonings, and drowning because the devices do not encourage children to stay within certain physical parameters and, in fact, cause them to lose control of their sense of space and location. This is because the child can move around faster and reach or navigate to hazardous areas, fall down stairs or enter isolated areas.

[0007] In contrast, stationary infant seat devices such as those taught by U.S. Pat. No. 6,001,047 by Ferarara (the '047 patent) and Kurtin et al. U.S. Pat. No. 5,522,782 by Kurtin (the '782 patent), incorporate child seats that limit movement of the child. These devices are stationary or semi-stationary child entertainment devices which allow an infant or toddler to comfortably remain in an upright position.

[0008] These non-wheeled devices are less hazardous since they do not have wheels and thus limit the child's range of mobility. However, these stationary infant seats are less enjoyable and stimulating to infants and children since the child is confined to one area and does not have the excitement of experimenting with their mobility.

[0009] Additionally, stationary devices pose hazards for active infants and toddlers including tipping, pinching body parts and falls. The stationary devices have seats in which to place a child, precisely to encourage the child to remain fairly immobile within the device. However, children often move, bounce, wriggle, thrust themselves backwards and forwards, and otherwise try to climb out of the device causing the device to tip or resulting in a fall or other injury.

[0010] Moreover, both walkers with wheels and stationary child seat devices are primarily designed for a child to be placed in an upright or semi-seated stationary position rather than to assist the child in pulling themselves up, and using the child's upper and lower body muscle groups for self-positioning and ambulating.

[0011] Moreover, children learning to walk often enjoy pulling themselves up and learning to support their weight on both their upper and lower body. Neither walkers with wheels or upright infant seat structures facilitate this. Infants and toddlers often pull themselves up using furniture with hard edges or which may tip, or which can be damaged and is otherwise ill-suited to be used as a support device to enhance the mobility of an infant or toddler learning to walk.

[0012] Traditional walkers and infant seats are also structurally cumbersome, expensive to assemble, and are difficult to adapt to the living space and décor in most homes. They are difficult to store and often must be left in conspicuous areas because of traditional closet space and other spatial limitations in a consumer's home. Walkers, seats and other equipment take up the space that might otherwise be used for furniture, and cannot be stored easily in areas that are not visible when the walkers or seats are not in use.

[0013] Additionally, traditional walkers and infant seats are designed for solitary infant play, rather than adapted so that more -than one child or toddler can play or socially interact

[0014] Other devices known in the art to assist walking are used in clinical (as opposed to home and daycare) settings and are manufactured to serve the function of medical equipment rather than as toys. Therapeutic devices often consist of variations of support bars and are more stable, but generally are not designed to be used as toys, and are not economically purchased as toys. They are not anthropometrically proportioned for toddlers. Moreover, these devices are not capable of being aesthetically or structurally adapted for consumer tastes and residential storage needs.

[0015] Moreover, therapeutic walking devices are not readily disassembled for shipping, storage, or transport.

[0016] It is desirable to introduce a toy device into consumer markets that overcomes the disadvantages of traditional baby equipment such as "walkers," seats and stationary devices for positioning children who are at a developmental stage of learning to walk to be able to pull themselves up and become mobile and ambulatory.

[0017] It is further desirable to design devices which are safe, and which will not tip over when the child uses the device for support, strains, bounces, pushes, or otherwise attempts to be more mobile within the device.

[0018] It is further desirable to design a device for assisting babies learning to walk that is light-weight, portable, and readily adjustable in size, and which can be adapted for vary-

ing sized living spaces, consumer markets and to accommodate varying numbers of children at play.

[0019] It is further desirable to have a play device that increases the mobility of infants and toddlers, but is safe for babies and that requires less supervision than traditional walkers and infant seats.

[0020] It is further desirable to have a play device that can be structured, configured and/or reassembled to accommodate as wide a range of infant/toddler/child activities and as broad a developmental age range of activities as possible, for example, allow children to create imaginary structures and boundary areas to facilitate creative play.

[0021] It is also desirable that a play device that can be offered as toy and/or in consumer markets that is cost-effective to manufacture, display, assemble and ship.

Glossary

[0022] As used herein, the term "ambulatory motion" means motion whereby an infant attempts to change their position in space by walking, crawling, supporting themselves in an upward position or otherwise moving or propelling themselves. Ambulatory motion may include the motion of an infant pulling themselves up using furniture, a support structure or other object and attempting to emulate walking motion.

[0023] As used herein the term "base support bar" means structural component of a device forming a support for a structure, a stand or a base, or which is a structural component to make the device stand upright and/or be more resistant to being overturned, toppled, or knocked over (including but not limited to additional vertical or horizontal structural support members added to increase stability and resistance to angular pressure and forces). A base support bar includes but is not limited to any bar, rod, rail, tube, tubular structure, panel, block, pedestal, figurine or structural segment adapted to provide support or form a base for a structure. A base support bar may be substantially horizontal, substantially vertical or positioned at any angle which provides or enhances structural support.

[0024] As used herein the term "connector" means a component into which infant grasping bars, support bars and legs can be selectively attached, lengthened, screwed, fastened, hinged, bolted, connected with lynch pins, threaded members, or parts which are structurally fitted or otherwise adapted to connect and/or receive infant grasping bars, support bars and legs and other tubular and non-tubular structures to form a modular play structure. Connectors may be a single tubular channel, T-shaped, L-shaped, S-shaped or irregularly shaped, and have any number of apertures and/or connection points.

[0025] As used herein, the term "enclosed area" is a designated space for an infant or toddler to utilize to engage in ambulatory motion.

[0026] As used herein, the term "enclosed structure" means a device in which the user is shut in two or more sides.

[0027] As used herein, the term "gripping surface" refers to a surface that is covered or textured in a manner to make the surface less slippery and easier to grip. A gripping surface may be textured, irregular, contoured, contain grooves and apertures, padded, covered or coated with a foam, fabric, adhesive or secondary material. A gripping surface may include a surface that is treated with appliques or stickers. A gripping surface may be on a base structure, leg or infant grasping bar or any other tubular or non-tubular structural component of a lightweight modular play structure.

[0028] As used herein, the term "infant grasping bar" means a structural component including, but not limited to, any bar, rod, rail, tube, tubular member, panel, block, pedestal, figurine, specially contoured or molded segment or structural segment adapted to be grasped or held by an infant or toddler for support. An infant grasping bar may be hollow or solid, or may be made of any plastic, polyvinyl chloride or vinyl plastic, aluminum, wood, bamboo or any other material that can be machined or molded to form an infant grasping bar. An infant grasping bar may be of any height, weight, width, length or anthropometric proportion adapted to be grasped, gripped, leaned upon or held by an infant. A base support bar may be substantially horizontal, substantially vertical or positioned at any angle which provides or enhances structural support.

[0029] As used herein, the term "infant stimulation features" means audio, visual or tactile devices or features that entertain or engage an infant or child. For example, an infant stimulation feature may include but is not limited to a toy, a visual enhancement feature, teething ring, pacifier, motion, audio devices, lights, textured components, bells, springs, clickers, percussion devices and/or or sound activated device or battery operated device.

[0030] As used herein the term "leg" means support structure of a device forming a vertical or angular member of a structure which provides support or connects base support bars and infant grasping bars.

[0031] As used herein, the term "light weight" means of a weight which is economically shipped and transported such that individual orders can be individually processed and shipped to a customer using commercial carrier, courier and postal services. As used herein, a lightweight item is an item which weighs less than twenty pounds.

[0032] As used herein, the term "low storage volume" means of dimensions which are easily packed, shipped or stored, for example in an area (such as a closet or box) that is no larger than 6 long by two feet.

[0033] As used herein, the term "modular play structure" means a configuration of infant grasping bars, support bars, legs and/or anti-tip components which can be varied in shape and dimensions to fit varying enclosed areas or space. Legs and connectors which may be selectively assembled and disassembled to form a lightweight, recreational modular play structure which is an alternative to traditional walkers and infant play seats. A modular play structure may include any combination of selectively attached infant grasping bars, support bars, legs and/or anti-tip components which may be hinged, threaded, structurally fitted or otherwise adapted to form a modular play structure.

[0034] As used herein, the term "non-tip structure" means a protuberance, contour, projection, or other structure which serves the sole or ancillary function of increasing stability and/or decreasing the propensity of a device to move or tip when force or pressure is applied in any manner by an infant.

[0035] As used herein the term, "stabilizing structure" means a structural adaptation to a device to make the device more resistant to being overturned, tipped, toppled, or knocked over (including but not limited to additional vertical or horizontal structural support members added to increase stability and resistance to angular pressure and forces).

[0036] As used herein the term, "selectively assembled" means can be taken apart and/or assembled in various shapes and configurations.

[0037] As used herein the term, "support structure" means a structural adaptation to a device to connect various components of a modular play structure, to modify its structural configuration or to add stability. A support structure may include legs, panels, blocks or any other component which may be used to provide connectivity, stability, support or to alter the structural configuration of the device.

[0038] As used herein, the term "textured gripping surface" means padding, textured material, a textured surface or other geometric or frictional material to facilitate gripping of infant grasping bars,

SUMMARY OF THE INVENTION

[0039] The device disclosed herein is a light-weight, portable and easily assembled recreational device which is selectively configured to provide support to infants and toddlers during developmental stages when they are learning to walk and pull themselves upright using support structures. The device is safely constructed and may include gripping surfaces, anti-tip features and other components that allow it to be easily assembled and configured for various special limitations, social settings and which may be re-configured to accommodate children and various developmental stages.

BRIEF DESCRIPTION OF DRAWINGS

[0040] FIG. **1** shows a side view of one embodiment of a lightweight modular play structure.

[0041] FIG. **2***a* shows a side view of one embodiment of a connector, which is curved.

[0042] FIG. **2***b* shows a side view of a T-shaped embodiment of a connector.

[0043] FIG. **2***b* shows a side view of a straight connector.

[0044] FIG. **3***a* shows a side view of one embodiment of a lightweight play modular structure having optional angled support structures, and four infant grasping bars.

[0045] FIG. **3***b* shows a side view of one embodiment of a lightweight play modular structure having optional angled support structures, and two infant grasping bars.

[0046] FIG. **4** shows a side view of an embodiment of a lightweight play modular structure having one or more optional textured gripping surfaces.

[0047] FIG. **5** shows a further embodiment of a lightweight modular play structure in which infant grasping bars are curved.

[0048] FIG. **6** shows a modular play structure with stabilizing structures added to provide stability.

[0049] FIG. **7** shows a lightweight modular play structure to which one or more infant stimulation devices may be selectively attached.

[0050] FIG. **8** shows a further embodiment of lightweight modular play structure which further includes a removable mat which may be used as floor covering or cushion.

[0051] FIG. **9** shows a lightweight infant support structure dis-assembled into its component parts for easy, light-weight, low storage volume storage and shipping.

DETAILED DESCRIPTION OF EMBODIMENTS OF THE INVENTION

[0052] For the purpose of promoting an understanding of the present invention, references are made in the text hereof to embodiments of a structure for infants learning to walk, only some of which are described herein. It should nevertheless be understood that no limitations on the scope of the invention are thereby intended. One of ordinary skill in the art will readily appreciate that modifications such as size, shape, and material may be varied to accommodate a variety of needs. Some of these possible modifications are mentioned in the following description. Therefore, specific details disclosed herein are not to be interpreted as limiting, but rather as a basis for the claims and as a representative basis for teaching one of ordinary skill in the art to employ the present invention in virtually any appropriately detailed structure or manner.

[0053] It should be understood that the drawings are not necessarily to scale, emphasis instead being placed upon illustrating the principles of the invention. In addition, in the embodiments depicted herein, like reference numerals in the various drawings refer to identical or near identical structural elements.

[0054] Moreover, the term "substantially" or "approximately" or "generally" as used herein may be applied to modify any quantitative representation that could permissibly vary without resulting in a change in the basic function to which it is related.

[0055] Referring now to the drawings, FIG. **1** shows one embodiment of lightweight modular play structure **100** for infants learning to walk having a rectangular shape. In the embodiment shown, the structure comprises a pair of generally parallel top infant grasping bars (**1***a*, **1***b*, **1***c* and **1***d*) and a pair of generally parallel base (or bottom) base bars (**2***a*, **2***b*, **2***c* and **2***d*) generally parallel to infant grasping bars (**1***a*, **1***b*, **1***c* and **1***d*). In the embodiment shown, infant grasping bars (**1***a*, **1***b*, **1***c* and **1***d*) and base bars (**2***a*, **2***b*, **2***c* and **2***d*) are substantially parallel, but may be at alternate angles and configurations in other embodiments. Additionally, other embodiments of lightweight modular play structure **100** may have fewer or more infant grasping and base bars, and may include infant grasping bars and base bars that are hollow, solid, curved or telescoping, constructed in multiple interlocking segments, irregular shaped or of varying lengths, curved, irregular shaped or varying lengths, circumferences and dimensions of horizontal infant grasping bars.

[0056] In the embodiment shown in FIG. **1**, top and bottom horizontal infant grasping bars are connected and/or together by legs (**3***a*, **3***b*, **3***c* and **3***d*) that are generally perpendicular to top and bottom horizontal infant grasping bars. In other embodiments, legs (**3***a*, **3***b*, **3***c* and **3***d*) may be substantially vertical, curved or angular. In still other embodiments, lightweight play structure **100** may have fewer or more legs or may employ alternative support structures such as blocks or panels. Vertical legs are joined by top crossbars to join top parallel bars and base (or bottom) crossbars to join base horizontal bars so as to enclose the structure. Other embodiments of lightweight play modular structure **100** may include vertical legs that are hollow, solid, curved or telescoping, constructed in multiple interlocking segments, irregular shaped or of varying lengths, circumferences and dimensions of horizontal infant grasping bars and base bars.

[0057] In the embodiment shown in FIG. **1**, legs (**3***a*, **3***b*, **3***c* and **3***d*) are constructed of lightweight hollow plastic pipes securely inserted into connectors having a plurality of apertures connecting infant grasping bars (**1***a*, **1***b*, **1***c* and **1***d*) and a pair of parallel base (or bottom) horizontal base bars (**2***a*, **2***b*, **2***c* and **2***d*) and vertical legs (**3***a*, **3***b*, **3***c* and **3***d*).

[0058] FIG. **1** also illustrates stabilizing structures (**4***a*, **4***b*, **4***c* and **4***d*) which are added to provide stability to lightweight modular play structure **100** so that it does not tip when angular or downward pressure is applied by an infant or toddler trying to pull themselves up using the structure. In the embodiment shown, stabilizing structures are added as an anti-tip feature, but may also provide stability on uneven surfaces, carpeting or indoor/outdoor surfaces. Stabilizing structures (**4***a*, **4***b*, **4***c* and **4***d*) may be attached at one or more points to lightweight modular play structure **100**, but may also be attached or bolted to the ground or an external surface by nails, bolts, spikes or any other means known in the art for stabilizing a structure. In the embodiment shown in FIG. **1**, stabilizing structures (**4***a*, **4***b*, **4***c* and **4***d*) are substantially horizontal,

[0059] In the embodiments shown in FIG. **1**, infant grasping bars (**1***a*, **1***b*, **1***c* and **1***d*) are rounded or tubular in shape, and are hollow in made of any plastic know in the art (including but not limited to polyvinyl chloride or polystyrene) plastic. In other embodiments, infant grasping bars may be solid, squared, have rounded edges, consist of segmented panels or blocks or be of any other structure to facilitate gripping by an infant or toddler learning to walk. In the embodiment shown, the tubular configuration of infant grasping bars (**1***a*, **1***b*, **1***c* and **1***d*), the rounded configuration eliminates sharp edges that may present a safety hazard to an infant or toddler, and the hollow plastic construction makes the structure light-weight, inexpensively manufactured and easily assembled and disassembled.

[0060] In the embodiment shown in FIG. **1**, infant grasping bars (**1***a*, **1***b*, **1***c* and **1***d*), base bars (**2***a*, **2***b*, **2***c* and **2***d*), legs (**3***a*, **3***b*, **3***c* and **3***d*) and stabilizing structures (**4***a*, **4***b*, **4***c* and **4***d*) may vary in size so as to accommodate virtually any size infant or toddler or to be used by older children as structured play devices. In still other embodiments, horizontal infant grasping bars (**1***a*, **1***b*, **1***c* and **1***d*), horizontal base bars (**2***a*, **2***b*, **2***c* and **2***d*), vertical legs (**3***a*, **3***b*, **3***c* and **3***d*) and stabilizing structures (**4***a*, **4***b*, **4***c* and **4***d*) may be uniform in size, height, width, length, and weight, or may be of varying, non-uniform proportions and materials.

[0061] In the embodiment shown in FIG. **1**, lightweight modular play structure is constructed of a plurality of lightweight hollow plastic pipes securely inserted into connector components having a plurality of apertures connecting infant grasping bars (**1***a*, **1***b* **1***c* and **1***d*), base bars (**2***a*, **2***b*, **2***c* and **2***d*) and legs (**3***a*, **3***b*, **3***c* and **3***d*) are connected in a manner which allows grasping bars (**1***a*, **1***b*, **1***c* and **1***d*), base bars (**2***a*, **2***b*, **2***c* and **2***d*) and legs (**3***a*, **3***b*, **3***c* and **3***d*) and other support components and structures to be easily assembled, selectively attached and detached, stored and shipped and assembled and re-assembled in various shapes, configurations and sizes.

[0062] In the embodiment shown infant grasping bars **1***a*, **1***b*, **1***c* and **1***d*, base bars **2***a*, **2***b*, **2***c* and **2***d* and legs **3***a*, **3***b*, **3***c* and **3***d* are approximately 1.5" in circumference and between 1 and 6 feet in length. In the embodiment shown grasping bars **1***a*, **1***b*, **1***c* and **1***d*, base bars **2***a*, **2***b*, **2***c* and **2***d* and legs **3***a*, **3***b*, **3***c* and **3***d*, are tubular and of uniform size and dimension. However, in other embodiments **1***a*, **1***b*, **1***c* and **1***d*, base bars **2***a*, **2***b*, **2***c* and **2***d* and legs **3***a*, **3***b*, **3***c* and **3***d* may be non-tubular and of varying sizes, circumferences, lengths shapes and dimensions.

[0063] In the embodiment shown, lightweight modular play structure occupies an area of 2 feet by eight and is approximately 8 to 14 inches tall, but me be assemble in various shapes and configurations with any number of grasping bars **1***a*, **1***b*, **1***c* and **1***d*, base bars **2***a*, **2***b*, **2***c* and **2***d* and legs **3***a*, **3***b*, **3***c* and **3***d* may be used in such configurations, and such components may be sold as kits or sets to vary such assembled dimensions and to facilitate use by individual and multiple children.

[0064] FIG. **2** illustrates various embodiments of a connector **200** having apertures (**200***a*, **200***b*, **200***c* and **200***d*) to receiver attach and/or connect any combination or configuration of infant grasping bars (**1***a*, **1***b*, **1***c* and **1***d*), base bars (**2***a*, **2***b*, **2***c* and $\mathbf{2}d)_1$ legs (**3***a*, **3***b*, **3***c* and **3***d*) and stabilizing structures (**4***a*, **4***b*, **4***c* and **4***d*). In the embodiment shown, connector **200** may include one or more apertures which may be connected by a single hollow or tubular channel. In other embodiments, connector **200** may be tooled, stamped, molded or machined from a solid structure having apertures, grooves, threaded members, adhesives, bolts, tightening members or other means to receive, attach and/or connect any combination or configuration of infant grasping bars (**1***a*, **1***b*, **1***c* and **1***d*), horizontal base bars (**2***a*, **2***b*, **2***c* and **2***d*), vertical legs (**3***a*, **3***b*, **3***c* and **3***d*) and stabilizing structures (**4***a*, **4***b*, **4***c* and **4***d*).

[0065] In various embodiments, connector **200** may have threaded apertures, lynch pins, hinges, telescoping components, bolts, or may be welded or fixably attached by molding or adhesive to connect infant grasping bars (**1***a*, **1***b*, **1***c* and A*d*) and a pair of parallel base (or bottom) horizontal base bars (**2***a*, **2***b*, **2***c* and **2***d*) and vertical legs (**3***a*, **3***b*, **3***c* and **3***d*). Connectors may be a single tubular channel, t-shaped, I-shaped, s-shaped or irregularly shaped.

[0066] FIG. **3***a* illustrates an embodiment of lightweight play modular structure **100** having infant grasping bars **1***a*, **1***b*, **1***c* and **1***d* optional angled support structures (**5***a*, **5***b*, **5***c* and **5***d*) to provide further support and stability to minimize tipping of the structure when angular or downward force is applied by an infant, or when the structure is pushed or pulled.

[0067] FIG. **3***b* illustrates an embodiment of lightweight play modular structure **100** having infant grasping bars **1***a* and **1***b* optional angled support structures (**5***a*, **5***b*, **5***c* and **5***d*) to provide further support and stability to minimize tipping of the structure when angular or downward force is applied by an infant, or when the structure is pushed or pulled.

[0068] FIG. **4** illustrates an embodiment of lightweight play modular structure **100** having one or more optional textured gripping surfaces (**6***a* and **6***b*) which may consist of padding, textured material, a textured surface or other geometric or frictional material to facilitate gripping of infant grasping bars (**1***a*, **1***b*, **1***c* and **1***d*) by an infant or toddler. FIG. **4** further includes optional horizontal base support structures (**7***a*, **7***b*, **7***c* and **7***d*) for added stability.

[0069] FIG. **5** shows a further embodiment of lightweight modular play structure **100** in which infant grasping bars (**1***a*, **1***b*, **1***c* and **1***d*) are curved. In the embodiment shown, infant grasping bars (**1***a*, **1***b*, **1***c* and **1***d*) are supported together by vertical legs (**3***a*, **3***b*, **3***c* and **3***d*) that are generally perpendicular to top and bottom horizontal infant grasping bars (**1***a*, **1***b*, **1***c* and **1***d*) which are curved in the embodiment shown to create a spherical structure.

[0070] FIG. **6** illustrates an embodiment of lightweight modular play structure **100** which is spherical and further includes anti-tip stabilizing structures (**5***a*, **5***b*, **5***c* and **5***d*). Other embodiments of lightweight modular play structure **100** may have fewer or more infant grasping bars and horizontal base bars, and may include horizontal base bars which are hollow, solid, curved or telescoping, constructed in mul-

tiple interlocking segments, irregular shaped or of varying lengths, curved, irregular shaped or varying lengths, circumferences and dimensions. In other embodiments, curved infant grasping bars, base bars, legs and support structures may be combined with straight and angled grasping bars, base bars, legs and support structures to form variable and uniquely shaped modular configurations.

[0071] In the embodiment shown in FIG. **5**, top and bottom horizontal curved infant grasping bars are supported together by legs (**3***a*, **3***b*, **3***c* and **3***d*) that are generally perpendicular to top and bottom horizontal infant grasping bars and are substantially vertical in the embodiment shown. Other embodiments of lightweight modular play structure **100** may have fewer or more legs which may be curved, angled or consist of panels, blocks or other structures. In the embodiment shown, vertical legs are joined by top crossbars to join top parallel bars and base (or bottom) crossbars to join base horizontal bars so as to enclose the structure. Other embodiments of lightweight modular play structure **100** may include vertical legs that are hollow, solid, curved or telescoping, constructed in multiple interlocking segments, irregular shaped or of varying lengths, circumferences and dimensions of horizontal infant grasping bars and base bars.

[0072] FIG. **6** also illustrates stabilizing structures (**5***a*, **5***b*, **5***c* and **5***d*) which are added to provide stability to lightweight modular play structure **100** so that it does not tip when angular or downward pressure is applied by an infant or toddler trying to pull themselves up using the structure.

[0073] In the embodiment of FIG. **6**, infant grasping bars (**1***a* and **1***b*) crossbars are curved and constructed from only two molded or machined pieces to simplify assembly.

[0074] FIG. **7** illustrates a further embodiment of lightweight modular play structure **100** to which one or more infant stimulation devices may be selectively attached. An Infant stimulation device **9** may include mobiles, toys attached by suction cups, bolts, clamps, string, cord, links, adhesives or vises, textured toys, pacifiers, teething rings, or surfaces (i.e. stuffed animals), snack receptacles, audio devices and representational elements such as numbers, letters, words or characters represented in cartoons in literature.

[0075] FIG. **8** illustrates a further embodiment of lightweight modular play structure **100** which further includes a removable mat **85** which may be used as floor covering or cushion. In the embodiment shown, removable mat **85** is attached at mat connection points (**88***a*, **88***b*, **88***c* and **88***d*) to hold the mat stationary and prevent an infant or toddler from detaching the mat and possibly suffocating or otherwise becoming injured. Other embodiments of removable mat **85** may not include cushioning or may include more or fewer connection points. In various embodiments, mat connection points may be weights, nails, screws, bolts, pegs or structures inserted through mat apertures, adhesives, magnetic or weights.

[0076] FIG. **9** shows a lightweight infant support structure dis-assembled into its component parts for easy, light-weight, low volume storage and shipping. This ability to dissemble lightweight modular play structure **100** contemplates that the device can be sold as a toy, and stored and shipped accordingly, thus overcoming the disadvantages of traditional equipment and furniture used for infants for ambulatory movement.

1. A lightweight, low-storage volume modular play structure comprising:

at least one infant grasping bar adapted to be safely grasped by an infant and used by the infant to pull themselves to a standing position;

at least one base bar; and

at least one support structure connecting said at least one infant grasping bar to said at least one base bar which can be sold as a toy and selectively assembled in multiple configurations and to be utilized as a stable support structure for an infant in pulling themselves up and supporting ambulatory motion.

2. The lightweight modular play structure of claim **1** which further includes at least one anti-tip structure which prevents said lightweight modular play structure from tipping when grasped by an infant and force is applied by the infant to attempt to pull themselves to an upright standing position.

3. The lightweight modular play structure of claim **1** which further includes at least one anti-tip structure which further includes at least one connector which allows said at least one infant grasping bar, said at least one base bar and said at least one base bar to be selectively assembled and disassembled to form multiple configurations.

4. The lightweight modular play structure of claim **1** wherein said infant grasping bar, said base bar and said support structure are each tubular and light weight, having a weight of less than 32 ounces.

5. The lightweight modular play structure of claim **1** wherein the structure comprises modular components for selective assembly for use and disassembly for transport or storage.

6. The lightweight modular play structure of claim **1** wherein said at least one connector and a component selected from a group consisting of said at least one infant grasping bar, support bar and leg are attached by screwing together threaded components.

7. The lightweight modular play structure of claim **1** wherein said at least one connector and a component selected from a group consisting of said at least one infant grasping bar, support bar and leg are attached by snapping together structurally configured attachable components which are created by a process consisting of molding or machining.

8. The lightweight modular play structure of claim **1** wherein the modular components are adapted to be stored in a small space having dimensions of less than **5** feet by two feet when disassembled.

9. The lightweight modular play structure of claim **2** wherein the modular components are adapted to be joined by at least one connector which is selected from a group of shapes consisting of elbow-shaped, curved, T-shaped, L-shaped, S-shaped and straight fittings.

10. The lightweight modular play structure of claim **1** wherein the structure is constructed of a group consisting of plastic and aluminum.

11. The lightweight modular play structure of claim **1** which further includes a mat.

12. The lightweight modular play structure of claim **1** wherein said infant grasping bar further includes at least one textured grasping surface.

13. A lightweight modular play structure comprising:

at least one infant grasping bar adapted to be safely grasped by an infant and used by the infant to pull themselves to a standing position resisting downward and angular forces imposed by the infant;

at least one base bar;

at least one connector connecting said at least one infant grasping bar to said at least one base bar which can be selectively assembled in multiple configurations and to be used as a stable support structure for an infant in pulling themselves up and supporting ambulatory motion;

said at least one infant grasping bar, said at least one base bar and said at least one support structure selectively attached to form an enclosed special structure to safely support ambulatory motion by the infant within said enclosed area.

14. The lightweight modular play structure of claim **13** wherein said infant grasping bar, said base bar and said support structure are each tubular and lightweight, having a weight of less than 32 ounces.

15. The lightweight modular play structure of claim **13** wherein the structure comprises modular components for selective assembly for use and disassembly for transport or storage and which has dimensions of no more than 5 feet by 2 feet when disassembled.

16. The lightweight modular play structure of claim **13** which further includes a component selected from the group consisting of a mat, an infant stimulation device, a textured grasping surface.

17. A lightweight modular play structure which may be used by one or more infants in ambulatory motion comprising:

at least one infant grasping bar adapted to be safely grasped by an infant and used by the infant to pull themselves to a standing position resisting downward and angular forces imposed by the infant;

at least one base bar which stabilizes the device;

at least one support structure connecting said at least one infant grasping bar to said at least one base bar which can be selectively assembled in multiple configurations and to be used as a stable support structure for an infant in pulling themselves up and supporting ambulatory motion; and

said at least one infant grasping bar, said at least one base bar and said at least one support structure are selectively attached to form an enclosed special structure to safely support ambulatory motion by the infant within said enclosed area.

18. The lightweight modular play structure of claim **17** which further includes optional support structures to accommodate contemporaneous use of said lightweight modular play structure by more than one infant.

* * * * *