US 20190299288A1

(19) **United States**

(12) **Patent Application Publication** (10) **Pub. No.: US 2019/0299288 A1**

Schloffer (43) **Pub. Date: Oct. 3, 2019**

(54) **METHOD FOR PRODUCING A COMPONENT FROM A GRADED TIAL ALLOY AND COMPONENT PRODUCED THEREFROM**

(71) Applicant: **MTU Aero Engines AG**, Munchen (DE)

(72) Inventor: **Martin Schloffer**, Muenchen (DE)

(73) Assignee: **MTU Aero Engines AG**, Munchen (DE)

(21) Appl. No.: **16/280,113**

(22) Filed: **Feb. 20, 2019**

(30) **Foreign Application Priority Data**

Feb. 22, 2018 (DE) 10 2018 202 723.4

Publication Classification

(51) **Int. Cl.**

B22F 3/105 (2006.01)

B22F 3/24 (2006.01)

(52) **U.S. Cl.**

CPC ***B22F 3/1055*** (2013.01); *B22F 2003/1042* (2013.01); *B22F 2301/205* (2013.01); ***B22F 3/24*** (2013.01)

(57) **ABSTRACT**

A method for producing a component from a TiAl alloy and a correspondingly produced component includes defining at least one first component region with a first property profile, and at least one second component region with a second property profile, which is different from the first property profile; providing a powder made of the TiAl alloy; additively manufacturing the component from the powder composed of the TiAl alloy, wherein the powder made of the TiAl alloy is melted for the cohesive binding of the powder particles to one another and to the substrate or to an already produced part of the component, and wherein the powder particles are melted for the formation of the first component region, and the powder particles for the formation of the second component region are melted under different conditions, so different chemical compositions of the deposited material are produced in both component regions.

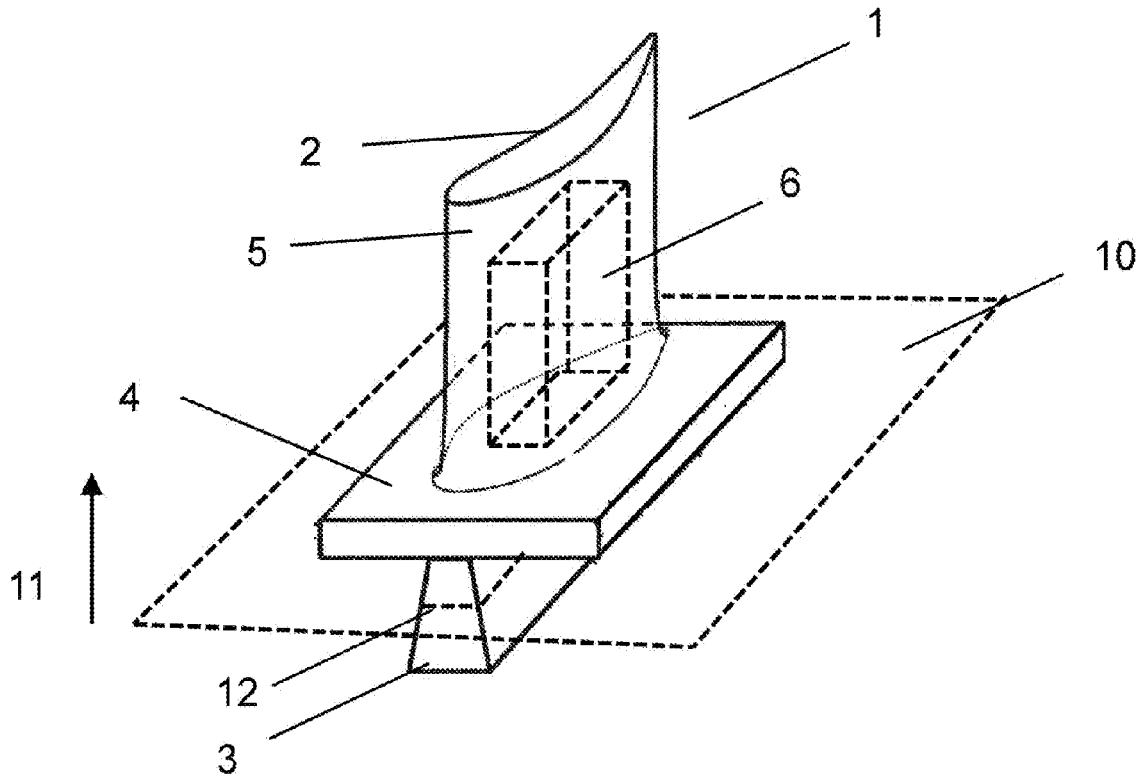

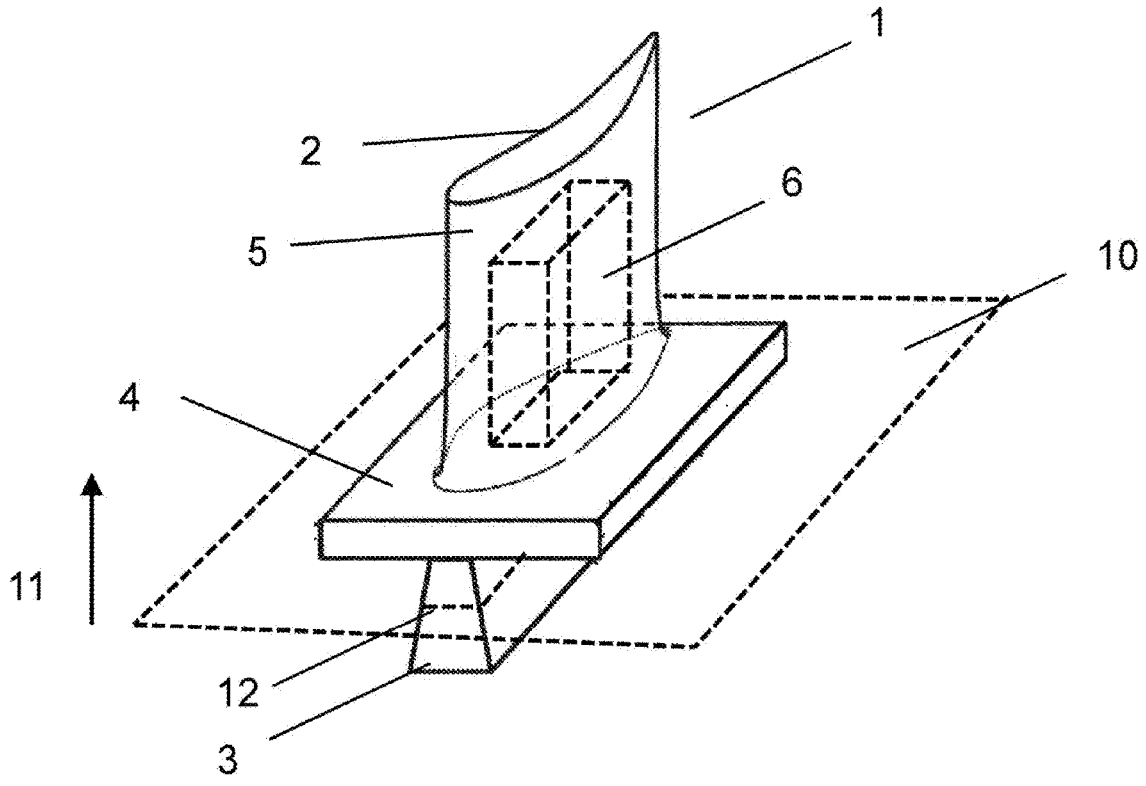

Fig. 1

METHOD FOR PRODUCING A COMPONENT FROM A GRADED TIAL ALLOY AND COMPONENT PRODUCED THEREFROM

BACKGROUND OF THE INVENTION

Field of the Invention

[0001] The present invention relates to a method for additively producing a component from a TiAl alloy and a correspondingly produced component, in particular a component of a turbomachine.

Prior Art

[0002] Based on their low specific gravity and their mechanical properties, components of titanium aluminides or TiAl alloys are of interest for use in gas turbines, in particular aircraft turbines.

[0003] Titanium aluminides or TiAl alloys here are understood to be alloys that comprise titanium and aluminum as principal constituents, so that the chemical composition thereof comprises aluminum and titanium as constituents with the highest percentages. Moreover, TiAl alloys are characterized by the formation of intermetallic phases, such as γ-TiAl or α_2-Ti_3Al, that bestow good strength or resistance properties on the material.

[0004] Of course, microstructures having high creep resistance usually also have a lesser ductility, so that components made of TiAl alloys with such microstructures under certain circumstances possess too small a ductility for inclusion in highly stressed regions. This should particularly be considered with the use of TiAl alloys for blades or vanes of turbomachines.

[0005] Correspondingly, it is already known from the prior art to assemble blades or vanes for turbomachines and, in particular aircraft engines, for example, by welded joints composed of several elements, so that the individual elements of the blade or vane can be formed from different materials corresponding to the different specification profiles, for example, materials that have a high ductility on one hand, and a high strength on the other hand.

[0006] In EP 3 238 868 A1, for example, a method is described for producing a blade or vane for a turbomachine, in particular an aircraft engine, in which blade element and blade root are formed from different TiAl alloys, and these are joined together by welding methods. Therefore, although blades or vanes already adapted to different specification profiles can be demonstrated, there is another requirement for improvement that involves an efficient and reliable manufacture of blades or vanes from TiAl alloys that will suffice for different and partially divergent requirements.

SUMMARY OF THE INVENTION

Object of the Invention

[0007] Therefore, the object of the present invention is to provide a method for producing a component from a TiAl alloy and a correspondingly produced component, wherein the method shall make possible an efficient production of a component made of a TiAl alloy that is adapted to different requirements. The component here shall reliably comprise the required properties and, in particular, be suitable for application in aircraft engines, wherein, in particular, regions with high strength and ductile potential and those with high creep resistance corresponding to local requirements can be adjusted independently from one another.

Technical Solution

[0008] This object is achieved by a method as well as a component of the present invention. Advantageous embodiments are discussed in detail below.

[0009] For achieving the above-named object, the invention proposes to produce the desired component from a TiAl alloy by an additive manufacture using a powder material. As additive manufacturing methods, for example, selective laser melting, selective electron beam melting, or build-up welding are considered. In order to adapt the component to the different requirements, such as, for example, sufficient ductility in the case of impact stresses and high strength in the case of high temperatures, and, in particular, creep resistance, it is additionally proposed to form the component with different chemical compositions in different component regions, wherein, however, only a single powder material having a single uniform chemical composition shall be used as initial material for the additive manufacture. The different component regions, namely at least one first component region that shall have a first property profile, and at least one second component region that shall have a second property profile, which is different from the first property profile, can be defined correspondingly at the beginning of manufacture of the component, depending on the requirements for the component as well as the geometry of the component. For example, in the case of a blade or vane for a turbomachine, and in particular an aircraft engine, it may be determined that the blade root as well as an outer region of the blade or vane element shall have a specific minimum ductility, whereas the core region of the blade or vane element shall possess a high creep resistance. Correspondingly, the root or the sheath of the blade or vane element can be defined as the first component region, and the core of the blade or vane element can be defined as the second component region.

[0010] According to the invention, the variation of the chemical composition in the different component regions for realizing different property profiles shall be achieved in that the powder particles composed of the TiAl alloy that are used for the additive manufacture are melted under different conditions in the different component regions, so that the component produced has different chemical compositions and thus different property profiles in the different component regions.

[0011] In this case, the chemical composition of the powder and of the powder particles that is or are used for the different component regions can be, in particular, the same, or can be substantially the same. For example, the at. % proportions of the alloy constituents cannot vary by more than 8%, preferably by 6%, in particular by 3%.

[0012] Different conditions for melting and re-solidifying the powder during the additive manufacture, conditions that lead to different chemical compositions in the corresponding component regions, can be realized, for example, by different melting temperatures and/or different holding times of the powder in the molten state, and/or different surrounding pressures of the ambient atmosphere prevailing during the additive manufacture.

[0013] Different melting temperatures and/or different surrounding pressures of the ambient atmosphere, such as, for example, a protective gas atmosphere, during the additive

manufacture, for example, lead to a different vaporizing of alloy constituents, so that the chemical composition of the component regions being deposited can be influenced. In the case of the TiAl alloy used, for example, it can be achieved by the different conditions during the melting of the TiAl powder that different percentages of aluminum, which have been deposited under the different conditions, are contained in the corresponding component regions. Due to the different aluminum percentages, correspondingly different microstructures can be realized, so that, for example, in a first component region, for example, a sheath of the blade or vane element, a greater ductility can be realized, and in the second component region, for example, the core of a blade or vane element, a greater creep resistance can be realized.

[0014] The deposition conditions of the TiAl alloy in the first component region, for example, can be selected so that in the melting of the TiAl powder, 0 to 1 at. % aluminum will be vaporized, while in the second component region, the deposition conditions can be selected so that 2 to 4 at. % aluminum will be vaporized. Correspondingly, the difference in the aluminum content between the different component regions can amount to at least 1 at. %.

[0015] In the different component regions in which the powder particles are deposited under different conditions during the additive manufacture, the deposition conditions can also be varied over the respective component region, so that a material gradient with a chemical composition that varies continuously or by steps arises within the component region.

[0016] In particular, transition regions can be provided at the boundary regions of the respective component regions; in these transition regions, the chemical composition or the property profile or the microstructure can be adapted continuously or by steps in the component regions that surround the particular component region.

[0017] The individual component regions can be realized with defined geometric accuracy, for example, with an accuracy of +/−500 m, preferably +/−200 m.

[0018] The TiAl powder provided for the additive manufacture may be composed of an alloy that contains 45.5 to 48 at. % Al, 4 to 6 at. % Nb, and in total up to 2 at. % of alloying elements Mo, W, Zr, Si, C and B, and the remainder of Ti along with unavoidable contaminants. After the additive processing, the component produced can have first component regions that contain a maximum 44.5 to 48 at. % Al, 4 to 6 at. % Nb, and in total up to 2 at. % of alloying elements Mo, W, Zr, Si, C and B, and the remainder Ti along with unavoidable contaminants, and second component regions that contain a minimum of 43.5 to 46 at. % Al, 4 to 6 at. % Nb, and in total up to 2 at. % of the alloying elements Mo, W, Zr, Si, C and B, and the remainder of Ti along with unavoidable contaminants.

[0019] As TiAl alloy for the TiAl powder provided for the additive manufacture, in particular, a so-called TNM alloy can be used, which comprises 45.5 to 48 at. % Al, 4 at. % Nb, 1 at. % Mo, 0.1 at. % B, and the remainder of Ti along with unavoidable contaminants, wherein, preferably, in the manufactured component in the second component regions, a composition having 43.5 at. % Al, 4 at. % Nb, 1 at. % Mo, 0.1 at. % B and the remainder of Ti along with unavoidable contaminants is present.

[0020] The correspondingly additively manufactured component, such as, for example, a blade or vane of a turbomachine, can be subjected to a heat treatment after the additive manufacture, with the formation of component regions having different chemical compositions, so that, due to the different chemical compositions in the different component regions, different microstructural regions are formed, which correspondingly take care of the different property profiles in the component regions.

[0021] Thus, the additively manufactured component from a TiAl alloy can be subjected first to a solution annealing treatment, which lies in the range of the solvus temperature (solution temperature) of the γ-phase (γ-TiAl), and, in particular, is conducted in the component region with the highest aluminum content, 20 to 50° C., preferably 30° C. below the solvus temperature. In particular, the solution annealing treatment below the solvus temperature of the component region with the highest aluminum content can be conducted so that a homogenizing of the structure takes place without dissolution of γ-TiAl in the regions with high aluminum content. At the same time, however, in component regions with lower aluminum content, which have a lower solvus temperature for the γ-TiAl because of the lower aluminum content, a dissolution of the γ-TiAl takes place, so that in these regions with lower aluminum content, a lamellar γ-TiAl structure without globular γ-TiAl is formed after cooling from the solution annealing treatment temperature.

[0022] Correspondingly, percentages of globular γ-TiAl of greater than or equal to 30 vol % can be formed in the regions with high aluminum content, while in the regions with lower aluminum content, a structure can arise, which has a percentage of globular γ-TiAl of less than or equal to 1 vol %. Correspondingly, the component region with high aluminum content and a high percentage of globular γ-TiAl possesses a greater ductility than the component region with low aluminum content and a low percentage of globular γ-TiAl. Correspondingly, it is advantageous for a blade or vane of a turbomachine, to form the core of the blade or vane element with low aluminum content and a low percentage of globular γ-TiAl, whereas the remaining regions and, in particular, the region of the root and the sheath or shell of the blade or vane element can be formed with a high aluminum percentage and a high percentage of globular γ-TiAl.

[0023] In the case of the present invention, the discussion relates to first and second component regions, but of course, third and additional component regions with different property profiles can also be provided. In a blade or vane according to the invention with a component region having a core with low aluminum content and a small percentage of globular γ-TiAl, the remainder of the blade or vane can be formed by a single additional component region or the remainder of the blade or vane can be formed by a plurality of different component regions with different chemical compositions and different property profiles.

[0024] The heat treatment of the additively manufactured component may comprise another annealing treatment in the form of an aging annealing, in which the component is aged for a specific time, for example, 2 to 6 hours in the region of the later operating temperatures, in order to adjust a thermodynamic equilibrium in the component. Correspondingly, in the case of a TiAl component for a turbomachine, the aging annealing can be conducted in the range of 800 to 950° C.

BRIEF DESCRIPTION OF THE FIGURES

[0025] The appended drawing shows, in a purely schematic way in the single appended FIGURE, a representation

of a turbine blade that is manufactured corresponding to the method according to the invention.

DESCRIPTION OF THE INVENTION

[0026] Further advantages, characteristics and features of the present invention will become apparent in the following detailed description of the examples of embodiment. Of course, the invention is not limited to these exemplary embodiments.

[0027] The FIGURE shows a blade **1** of a turbomachine having a blade element **2** and a blade root **3** as well as an inner shroud **4** arranged between blade element **2** and blade root **3**. The blade **1** is formed from a TiAl alloy that has, for example, a composition of 43.5 at. % aluminum, 4 at. % niobium, 1 at. % molybdenum, as well as 0.1 at. % boron, with the remainder of titanium along with unavoidable contaminants. The blade **1** is additively formed from a powder material of the TiAl alloy by selective laser beam melting or selective electron beam melting, in which, layer by layer, corresponding to the cross section of the blade **1**, the blade **1** is formed by corresponding build-up of layers onto the part of the blade **1** that has already been manufactured by melting and solidifying powder composed of the TiAl alloy.

[0028] In the FIGURE, a plane **10** is shown, which, for example, intersects the blade root **3**, so that a rectangular cross section **12** of the blade root **3** results. In the layer by layer build-up of the blade **1** along the build-up direction **11**, which is indicated by the arrow, with layer by layer deposition of the TiAl powder in layers parallel to the plane **10**, powder material is deposited by melting and solidifying in the corresponding layer that is here given by the cross section **12** of the blade root **3**, thus, in the example shown of plane **10**, a rectangular layer of the powder material on the already existing part of the blade root **3**. Accordingly, in each case, a cross-sectional region of the blade **1**, the region being produced along the build-up direction **11** through a cross section of the blade **1** with a plane parallel to the plane **10**, is deposited by melting and subsequent solidifying of powder material.

[0029] As results from the appended FIGURE, the blade root **3** and the shroud **4** are built up homogeneously from the TiAl alloy of the powder material, while in the region of the blade element **2**, the blade **1** has two different component regions, namely a first component region **5** in the form of a sheath or shell and a second component region **6** in the form of a core of the blade element **2**.

[0030] The first component region **5** and the second component region **6** of the blade element **2** differ with respect to their chemical composition and structure. In the first component region **5**, which forms the sheath or shell of the blade element **2**, the blade **1** has a higher aluminum percentage than in the second component region **6**, which forms the core of the blade element **2**. Correspondingly, the structure of the first component region **5** is shown to have a higher percentage of globular γ-phase (γ-TiAl) than the second component region **6**. By way of example, the percentage of globular γ-phase in the first component region **5** is greater than or equal to 30 vol %, while the percentage of globular γ-TiAl in the second component region **6** can be smaller than or equal to 1 vol %. Due to the high percentage of globular γ-TiAl in the first component region **5**, the first component region **5** in the shape of the sheath or shell has a higher ductility than the second component region **6**. In contrast, however, the second component region **6** in the form of the core of the blade element **2** possesses a higher creep resistance based on the low percentage of globular γ-TiAl, so that with high operating temperatures and centrifugal forces, which act on rotating blades of turbomachines, the creep deformation of the blade element **2** can be prevented or at least limited.

[0031] The different chemical compositions with different aluminum contents in the first component region **5** and in the second component region **6** as well as the different microstructures resulting therefrom with different percentages of globular γ-TiAl can be achieved in the additive manufacture by selective laser melting or selective electron beam melting, due to the fact that the powder material composed of the TiAl alloy is melted and re-solidified under different conditions. Thus, in the second component region **6**, which forms the core of the blade element **2**, the deposition of the powder material composed of the TiAl alloy can be produced by vaporizing more aluminum during the deposition, thus during the melting and re-solidifying, so that the aluminum percentage is reduced in the second component region **6**. This can be achieved, for example, by increasing the melting temperature, and/or reducing the pressure of the surrounding atmosphere, for example, of a protective gas atmosphere.

[0032] Correspondingly, the blade **1** has a smaller aluminum percentage in the second component region **6** after the additive manufacture. In a subsequent heat treatment, for example, by hot isostatic pressing at a high temperature near the solvus temperature of the γ-TiAl, for the first component region with high aluminum percentage, thus the solution temperature of the γ-TiAl, at which γ-TiAl dissolves, but below the melting point or solidus temperature, there occurs a dissolution of the γ-TiAl in the second component region [[5]]6 with low aluminum percentage, in which the solvus temperature is lower, so that in the second component region **6**, after cooling from the solution annealing temperature or the temperature for the hot isostatic pressing in the second component region **6**, the percentage of globular γ-TiAl is small. Instead of this, lamellar γ-TiAl is formed, which has a high creep resistance, but a lesser ductility.

[0033] After the solution annealing treatment or the hot isostatic pressing, another temperature treatment can be conducted, in which the blade **1** is subjected to an aging annealing, for example, in the range of 850 to 950° C. for 2 to 6 hours in order to bring the blade **1** into thermodynamic equilibrium in the range of the operating temperatures of the blade. After this, another concluding final processing of the blade **1** can be produced.

[0034] Although the present invention has been described in detail on the basis of the exemplary embodiments, it is obvious to the person skilled in the art that the invention is not limited to these exemplary embodiments, but rather that modifications are possible in such a way that individual features are omitted or other types of combinations of features can be realized, without leaving the scope of protection of the appended claims. In particular, the present disclosure encompasses all combinations of the individual features shown in the different examples of embodiment, so that individual features that are described only in conjunction with one exemplary embodiment can also be used in

other exemplary embodiments or combinations of individual features that are not explicitly shown can also be employed.

1. A method for producing a component from a TiAl alloy, comprising the following steps:

defining at least one first component region having a first property profile, and at least one second component region having a second property profile, which is different from the first property profile;

providing a powder composed of the TiAl alloy;

additively manufacturing the component from the powder made of the TiAl alloy, wherein the powder made of the TiAl alloy is melted for the cohesive binding of the powder particles to one another and to the substrate or to an already produced part of the component, and wherein the powder particles are melted for the formation of the first component region and the powder particles for the formation of the second component region are melted under different conditions in such a way that different chemical compositions of the deposited material are produced in the first component region and in the second component region.

2. The method according to claim **1**, wherein the different conditions for melting the powder include different melting temperatures and/or different holding times in the molten state, and/or different surrounding pressures.

3. The method according to claim **1**, wherein the different conditions for melting the powder are selected so that different quantities of aluminum are vaporized.

4. The method according to claim **1**, wherein the different conditions for melting the powder during the production of the first and/or the second component region are varied over the corresponding first and/or second component region to such an extent that a material gradient is deposited in the corresponding first and/or second component region.

5. The method according to claim **1**, wherein the property profile in the first component region has a greater ductility than in the second component region, and/or in that the property profile in the second component region has a greater creep resistance than in the first component region.

6. The method according to claim **1**, wherein during the melting of the powder, 0 to 1 at. % Al is vaporized in the first component region and/or 2 to 4 at. % Al are vaporized in the second component region.

7. The method according to claim **1**, wherein a third or additional component regions are defined that have different property profiles than the first and/or second component regions.

8. The method according to claim **1**, wherein the first and/or second component regions are formed so that they have transition regions at their boundaries, in which the property profiles and/or the chemical compositions, and/or the microstructure are adjusted stepwise or continuously to the surrounding regions.

9. The method according to claim **1**, wherein the additive manufacture comprises selective laser beam melting, selective electron beam melting, and build-up welding.

10. The method according to claim **1**, wherein the TiAl powder provided for the additive manufacture is composed of an alloy that contains 45.5 to 48 at. % Al, 4 to 6 at. % Nb, and in total up to 2 at. % of the alloying elements Mo, W, Zr, Si, C and B, and the remainder of Ti along with unavoidable contaminants, and in that, after the additive processing, the component produced has first component regions that contain a maximum 44.5 to 48 at. % Al, 4 to 6 at. % Nb, and in total up to 2 at. % of the alloying elements Mo, W, Zr, Si, C and B, and the remainder of Ti along with unavoidable contaminants, and second component regions that contain a minimum of 43.5 to 46 at. % Al, 4 to 6 at. % Nb, and in total up to 2 at. % of the alloying elements Mo, W, Zr, Si, C and B, and the remainder of Ti along with unavoidable contaminants.

11. The method according to claim **1**, wherein after the additive manufacture, the component is subjected to a heat treatment, in particular a heat treatment that comprises at least two different annealing treatments, namely a solution annealing in the range of the solution temperature for γ-TiAl and an aging treatment at 800 to 950° C. for 2 to 6 hours with oven cooling.

12. The method according to claim **11**, wherein the solution annealing is carried out by hot isostatic pressing of the component, and/or in that the solution annealing is carried out at a temperature of 50 to 20° C. below the solution temperature of the γ-TiAl of the first component region or the component region with the highest Al concentration.

13. The method of claim **1**, wherein a component of a turbomachine made of a TiAl alloy is produced and is fabricated in one piece by additive manufacture, wherein the component comprises at least one first component region that has a first property profile, and at least one second component region that has a second property profile, which is different from the first property profile, wherein first and second component regions have different chemical compositions and different microstructures.

14. The method according to claim **13**, wherein the component is a blade and the first component region is an edge region of the blade, and the second component region is a core region of the blade, wherein the first component region has a greater ductility than the second component region and the second component region has a greater creep resistance than the first component region.

15. The component according to claim **13**, wherein the first component region has a structure containing greater than or equal to 30 vol. % globular γ-TiAl, and the second component region has a structure containing less than or equal to 1 vol. % globular γ-TiAl.

* * * * *