Innovation, Sciences et Développement économique Canada
Office de la Propriété Intellectuelle du Canada

Innovation, Science and Economic Development Canada
Canadian Intellectual Property Office

CA 2843732 C 2018/12/18

(11)(21) **2 843 732**

(12) **BREVET CANADIEN**
CANADIAN PATENT

(13) **C**

(86) **Date de dépôt PCT/PCT Filing Date:** 2012/07/26
(87) **Date publication PCT/PCT Publication Date:** 2013/02/07
(45) **Date de délivrance/Issue Date:** 2018/12/18
(85) **Entrée phase nationale/National Entry:** 2014/01/30
(86) **N° demande PCT/PCT Application No.:** US 2012/048309
(87) **N° publication PCT/PCT Publication No.:** 2013/019545
(30) **Priorité/Priority:** 2011/08/01 (US61/513,845)

(51) **Cl.Int./Int.Cl.** ***F16B 19/00*** (2006.01), ***F16B 13/04*** (2006.01), ***F16B 5/00*** (2006.01)

(72) **Inventeur/Inventor:**
MALONEY, MICHAEL, US

(73) **Propriétaire/Owner:**
PEM MANAGEMENT, INC., US

(74) **Agent:** SMART & BIGGAR

(54) **Titre : PUNAISES MINIATURES**
(54) **Title: MINIATURE TACK PINS**

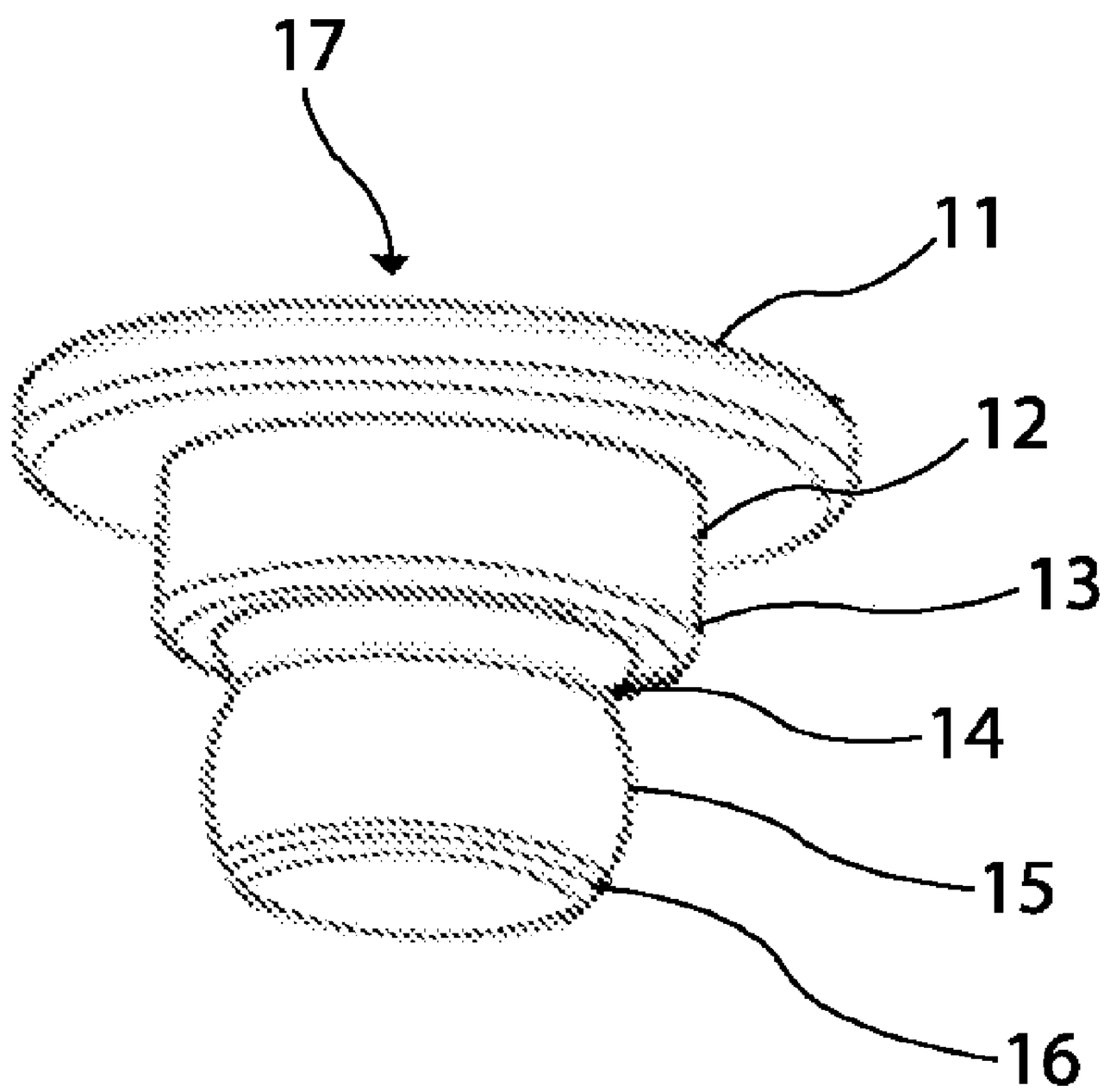

(57) **Abrégé/Abstract:**
A fastener pin has a head at a topmost end that is the greatest diameter of the fastener. A shoulder extends downward from the head and includes a bottom surface for displacing material of a host object. A broaching section of rectangular lateral cross-section is located immediately below the displacer by cutting a rectangular profile into a round installation hole in the host object. Immediately below the broaching section is a tapered tip at a bottommost end which may be in the shape of a rectangular pyramid rotated radially out of alignment with the remainder of the other fastener features which all have parallel side edges. This individual fastener is one of a series of substantially identical pins attached toe-to-head at severable joints in a continuous string of fasteners.

(12) INTERNATIONAL APPLICATION PUBLISHED UNDER THE PATENT COOPERATION TREATY (PCT)

(19) World Intellectual Property Organization
International Bureau

(43) International Publication Date
7 February 2013 (07.02.2013)

WIPO | PCT

(10) International Publication Number
WO 2013/019545 A1

(51) International Patent Classification:
F16B 15/00 (2006.01)

(21) International Application Number:
PCT/US2012/048309

(22) International Filing Date:
26 July 2012 (26.07.2012)

(25) Filing Language: English

(26) Publication Language: English

(30) Priority Data:
61/513,845 1 August 2011 (01.08.2011) US

(71) Applicant *(for all designated States except US)*: **PEM MANAGEMENT, INC.** [US/US]; 103 Foulk Road, Suite 108, Wilmington, Delaware 19803 (US).

(72) Inventor; and
(75) Inventor/Applicant *(for US only)*: **MALONEY, Michael** [US/US]; 5480 Silo Hill Road, Doylestown, Pennsylvania 18902 (US).

(74) Agent: **GORE, Gregory J.**; Cavella & Associates, 70 West Oakland Avenue, Suite 316, Doylestown, Pennsylvania 18901 (US).

(81) Designated States *(unless otherwise indicated, for every kind of national protection available)*: AE, AG, AL, AM, AO, AT, AU, AZ, BA, BB, BG, BH, BN, BR, BW, BY, BZ, CA, CH, CL, CN, CO, CR, CU, CZ, DE, DK, DM, DO, DZ, EC, EE, EG, ES, FI, GB, GD, GE, GH, GM, GT, HN, HR, HU, ID, IL, IN, IS, JP, KE, KG, KM, KN, KP, KR, KZ, LA, LC, LK, LR, LS, LT, LU, LY, MA, MD, ME, MG, MK, MN, MW, MX, MY, MZ, NA, NG, NI, NO, NZ, OM, PE, PG, PH, PL, PT, QA, RO, RS, RU, RW, SC, SD, SE, SG, SK, SL, SM, ST, SV, SY, TH, TJ, TM, TN, TR, TT, TZ, UA, UG, US, UZ, VC, VN, ZA, ZM, ZW.

(84) Designated States *(unless otherwise indicated, for every kind of regional protection available)*: ARIPO (BW, GH, GM, KE, LR, LS, MW, MZ, NA, RW, SD, SL, SZ, TZ, UG, ZM, ZW), Eurasian (AM, AZ, BY, KG, KZ, RU, TJ, TM), European (AL, AT, BE, BG, CH, CY, CZ, DE, DK, EE, ES, FI, FR, GB, GR, HR, HU, IE, IS, IT, LT, LU, LV, MC, MK, MT, NL, NO, PL, PT, RO, RS, SE, SI, SK, SM, TR), OAPI (BF, BJ, CF, CG, CI, CM, GA, GN, GQ, GW, ML, MR, NE, SN, TD, TG).

Published:

— *with international search report (Art. 21(3))*

(54) Title: MINIATURE TACK PINS

FIGURE 1

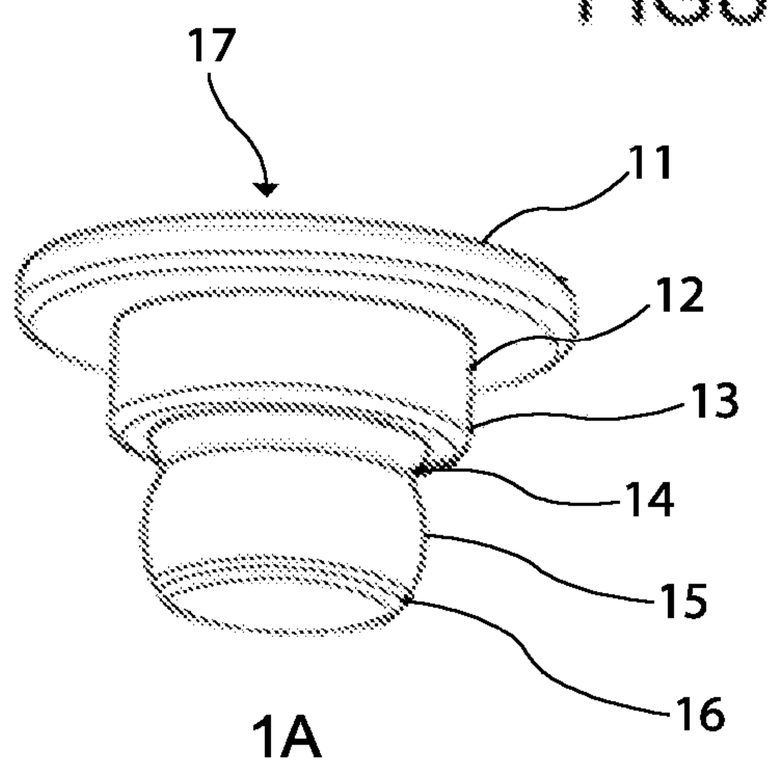

(57) Abstract: A fastener pin has a head at a topmost end that is the greatest diameter of the fastener. A shoulder extends downward from the head and includes a bottom surface for displacing material of a host object. A broaching section of rectangular lateral cross-section is located immediately below the displacer by cutting a rectangular profile into a round installation hole in the host object. Immediately below the broaching section is a tapered tip at a bottommost end which may be in the shape of a rectangular pyramid rotated radially out of alignment with the remainder of the other fastener features which all have parallel side edges. This individual fastener is one of a series of substantially identical pins attached toe-to-head at severable joints in a continuous string of fasteners.

WO 2013/019545 A1

MINIATURE TACK PINS

RELATED APPLICATION

This patent application is a non-provisional of provisional patent application serial number 61/513,845 entitled "Miniature Tack Pins" filed on August 1, 2011, priority from which is hereby claimed.

FIELD OF THE INVENTION

The present invention relates to a miniature fastener applied to two panels with aligned apertures face-to-face severed one at a time prior to installation. More specifically, it relates to a clinching pin which deforms the bottom panel to join the panels by clinch attachment.

BACKGROUND OF THE INVENTION

Clinch-type fasteners are well known in the art for securing panels together face-to-face. A displacer on the shank of the pin deforms material of the bottom panel pushing it into an undercut in the shank thus locking the pin into the bottom panel holding the top panel against it by the head of the pin. A head of the fastener abuts the top sheet and retains it against a bottom panel when the fastener is pressed in.

A problem exists however when handling clinch-type tack pins which are in miniature because they are difficult to handle when one attempts to manually place them into position for a press-in attachment process. As tack pins are being designed and used ever smaller, the automatic orientation feeding installation of these parts becomes more difficult and even impossible to do with some very small parts. Therefore, there is a need in the art for a machine-fed miniature tack pin which can be installed in an automated process resulting in two panels being effectively fastened together.

SUMMARY OF THE INVENTION

The present invention is a clinching pin with a head, a shoulder and an undercut for clinching. This part is used to hold two sheets of metal together, the top sheet being captivated beneath the head of the pin while the body of the pin is clinched into the bottom of the sheet. In one embodiment of the invention, the pin is square or rectangular in cross-section with a broaching portion at the tip which forms a square or rectangular portion in a round hole of the bottom sheet for straight edge clinching features to engage. All features of the pin are formed in one forming or etching operation. In another embodiment, the pins are severably attached toe-to-head in a string and fed on a reel to the attachment site to simplify the feed and installation process.

More specifically, the applicant has invented a fastener pin having a head at a topmost end that is the greatest diameter of the fastener. A shoulder extends downward from the head and includes a bottom surface for displacing material of a host object. A broaching section of rectangular lateral cross-section is located immediately below the displacer by cutting a rectangular profile into a round installation hole in the host object. Immediately below the broaching section is a tapered tip at a bottommost end which may be in the shape of a rectangular pyramid rotated radially out of alignment with the remainder of the other fastener features which all have parallel side edges. The invention further contemplates that this individual fastener is one of a series of substantially identical pins attached toe-to-head at severable joints in a continuous string of fasteners.

According to one aspect of the present invention, there is provided an elongate strip of fastener pins connected at severable joints between them, comprising: a series of fasteners connected by severable joints between adjacent ends, each individual fastener adapted for attaching a first object to host material of a second object by forceable insertion into the host material, and each fastener comprising, a head at a topmost end; a shoulder adjacent said head for displacing host material; an undercut adjacent said shoulder for receiving the host material displaced by said shoulder to affix said fastener to the host material; and a tapered tip at a bottommost end.

CA 2843732 2018-06-26

According to another aspect of the present invention, there is provided a fastener pin, comprising: a head at a topmost end, said head being the greatest diameter of the fastener; a shoulder extending downward from said head, said shoulder including a displacer for displacing material of a host object; a broaching section of rectangular lateral cross-section located immediately below said displacer for cutting a rectangular profile into a round installation hole in the host object; and a tapered tip at a bottommost end of the fastener.

In this respect, before explaining at least one embodiment of the invention in detail, it is to be understood that the invention is not limited in its application to the details of construction and to the arrangements of the components set forth in the following description or illustrated in the drawings. The invention is capable of other embodiments and of being practiced and carried out in various ways. Also, it is to be understood that the phraseology

CA 2843732 2018-06-26

and terminology employed herein are for the purpose of description and should not be regarded as limiting.

As such, those skilled in the art will appreciate that the conception, upon which this disclosure is based, may readily be utilized as a basis for the designing of other structures, methods, and systems for carrying out the several purposes of the present invention.

BRIEF DESCRIPTION OF THE DRAWINGS

FIG. 1 includes individual drawings A-D: Figure 1A is a front bottom isometric view; Figures 1B and 1C are sequential elevation sectional views showing installation of the invention; and Figure 1D is a bottom plan sectional view taken from Figure 1C.

FIG. 2 includes individual drawings A-D: Figure 2A is a bottom right front isometric view; Figures 2B and 2C are sequential elevation sectional views showing installation of the invention; and Figure 2D is a bottom plan sectional view taken from Figure 2C.

FIG. 3 includes individual drawings A-D: Figure 3A is a bottom right front isometric view; Figures 3B and 3C are sequential elevation sectional views showing installation of the invention; and Figure 3D is a bottom plan sectional view taken from Figure 3C.

FIG. 4 includes individual drawings A-D: Figure 4A is a bottom right front isometric view; Figures 4B and 4C are sequential elevation sectional views showing installation of the invention; and Figure 4D is a bottom plan sectional view taken from Figure 4C.

FIG. 5 depicts a top right front isometric views of the embodiments shown in Figures 1-4 manufactured as continuous strings of individual fasteners joined toe-to-head.

DESCRIPTION OF THE PREFERRED EMBODIMENT

Referring now to Figures 1A - 1D, a head 11 of pin 17 retains a top sheet 18 onto a bottom panel 19. A shoulder 12 on the body of the pin allows vertical clearance for the top sheet. A portion of the shoulder is a displacer 13 for clinching that forms a lower portion of the shoulder 12. An undercut 14 beneath the shoulder is filled with displaced material of the

bottom panel 19 during the pressed-in application which then retains the fastener to the bottom panel. During the installation process, an interference bulb 15 perfectly sizes the installation hole for receiving the displacer diameter that follows the bulb 15 into the installation hole. A tapered tip 16 aids in the alignment of the tack pin as it enters the installation hole. Referring to the various views of a round tack pin which embodies the invention, Figures 1B and 1C illustrate that the interference bulb effectively centers the part and sizes the installation hole so that all of the displaced material is available to fill the undercut of the fastener thereby eliminating the inefficiency of filling clearance space around the fastener as is necessary for clinch fasteners that do not have an interference hole sizing feature such as the present interference bulb. Figure 1D depicts the interference sizing ring band projected area 20 and the projected displaced material area 21 in sheet 19.

Figures 2 through 4 illustrate other geometries for tack pins of the present invention. The functionality of the respective features of a head, an undercut, a displacer and a tapered tip are well-known to those of skill in the art and need not be individually described in each of the separate embodiments shown in Figures 2 - 4. With all other features of the tack pin including the undercut and the displacer sections being equal, the length of the clinch area is proportional to the fastener's pullout performance such that the longer the clinch, the stronger the pullout strength which, assuming that the head of the fastener is significantly stronger than the clinch attachment, is exemplified by the resistance to shearing the metal in the undercut. The longer the filled undercut is the stronger the pullout is.

Referring now to Figure 2, another embodiment of the invention includes a rectangular tack pin that will clinch in on two edges. This version of the tack pin includes head 31, shoulder 32, displacer 33, undercut 34, and a tapered tip 36 in a rectangular pyramid shape instead of the smooth-sided conical shape provided by the previous embodiment shown in Figure 1. In all of the embodiments, the tapered tip centers the part in the round hole, in

this case by having four corners at the base of the pyramidal tip finishing on tangent points with the installation hole as shown in Figure 2D. Once this part is centered in the hole, a rectangular broaching section 35 follows as the pressing installation continues. This structure replaces the interference bulb described in the previous embodiment of Figure 1 which illustrates a round tack pin with a circular lateral cross-section at all points. As the pin 37 is installed the rectangular broaching section 35 effectively changes the shape of the top of the round hole in the bottom panel to prepare it for clinching with the rectangular displacer that follows as shown in Figure 2C. Figure 2D shows the relationship between the installation hole 40, the tapered tip 36, the projected area 42 of the broaching sizing and the rectangular displaced section projected area 43. Excess metal from the broaching process enters the void of the installation hole below the fastener. Greater efficiency is provided by the broaching section since there is no clearance volume around the fastener that has to be filled before clinching occurs. Because of the geometric necessities of this rectangular geometry, the fact that only two edges are being clinched in, a performance lower than that of the previously described round tack pin can be expected.

Referring to Figures 3 and 4, two additional configurations of the tack pin are disclosed which show a square cross-section of features. The pins in these embodiments clinch on all four sides. The difference in the two configurations is only in the orientation of the lead-in tip. Figure 3A depicts the pin features of a head 51, a shoulder 52, a displacer 53, an undercut 54, a broach 55, and a tapered tip 56. As shown in Figures 3B and 3C the installation process clinches pin 57 into panel 59 by forceable pressing, thus retaining sheet 58. The configuration shown in Figure 3 has a rotated tip that aligns material that is being broached to make the installation hole into a square with flat sides of the tapered tip allowing more unrestricted space for the waste material to enter. Figure 3D depicts the installation

hole 60 of panel 59, the tapered tip of the fastener 61, the square broaching section projected area 62, and the square displacer section projected area 63.

The configuration shown in Figure 4 which has the tip aligned in parallel with the side edges of all other square section features on the fastener. Features 71 - 76 of this embodiment correspond to Features 51 - 56, respectively, described with regard to Figure 3 above. The difference is that tapered tip 76 is not rotated radially out of alignment but is parallel with the remainder of the other parallel feature side edges. The installation sequence shown in Figures 4B and 4C is identical to the previous embodiments wherein fastener 77 secures sheet 78 to panel 79 by forceable deformation of the panel 79. Figure 4D depicts the installation hole 80, the lead-in tapered tip 81 and the projected areas of the square broaching section 82 and the square displacer section 83.

The tack pins in Figures 3 and 4 have a square-based pyramidal lead-in tip that centers the part in a round installation hole as the fastener enters. A square broaching section then follows creating a square opening at the top of the round installation hole. The broaching section is followed by a four-sided undercut and displacer. This configuration creates the longest clinch length of all of the embodiments disclosed herein. For example, the clinch length of the square tack pin shown in Figures 2 and 3 is 1.6 times greater than the clinch length of the round fastener shown in Figure 1.

Referring now to Figure 5, all four configurations of the tack pin shown in Figures 1-4 are illustrated in strips 1 - 4 each attached toe-to-head. Continuous manufacturing methods are required to make the tack pins in these continuous string configurations. For example, the round continuous feed tack pins are made on a continuous wire feed CNC machine with the cutters or roll formers orbit the axis of straightened wire as it feeds through the CNC lathe. The rectangular continuous feed tack pins are made either by continuous stamping or reel-to-reel photo etching machinery. The square pins require reel-to-reel photo etching and laser

cutting oriented at 90° to the photo etching to cut the profile on the front and back sides of the photo etched parts. These parts are designed to shear off each part from the end of the string for installation. The shear force required is controlled by the contact area between the tip of the head and the tip and the head of the next adjacent tack pin. The tack pins are then packaged on a standard reel and then loaded into a module that both shears a part from the string and delivers each part to a punch for installation.

Therefore, the foregoing is considered as illustrative only of the principles of the invention. Further, since numerous modifications and changes will readily occur to those skilled in the art, it is not desired to limit the invention to the exact construction and operation shown and described, and accordingly, all suitable modifications and equivalents may be resorted to, falling within the scope of the invention.

What is claimed as being new and desired to be protected by Letters Patent of the United States is as follows:

CLAIMS:

1. An elongate strip of fastener pins connected at severable joints between them, comprising:

a series of fasteners connected by severable joints between adjacent ends, each individual fastener adapted for attaching a first object to host material of a second object by forceable insertion into the host material, and each fastener comprising,

a head at a topmost end;

a shoulder adjacent said head for displacing host material;

an undercut adjacent said shoulder for receiving the host material displaced by said shoulder to affix said fastener to the host material; and

a tapered tip at a bottommost end.

2. The strip of fasteners of claim 1 further including a barrel-shaped bulb of circular lateral cross-section located between said undercut and said tip, said bulb adapted for radially expanding a round receiving hole in the host material.

3. The strip of fasteners of claim 1 wherein the lateral cross-section of said fasteners is rectangular.

4. The strip of fasteners of claim 3 further including a broaching section located between the undercut and the tip for shaping the sides of a receiving hole in the host material.

5. The strip of fasteners of claim 4 wherein said receiving hole is round.

6. The strip of fasteners of claim 1 wherein said tapered tip is defined by a rectangular pyramid shape.

7. The strip of fasteners of claim 6 wherein the lateral cross-section of said fasteners is square.

CA 2843732 2018-06-26

8. The strip of fasteners of claim 7 wherein the tip is radially offset 45 degrees with respect to said shoulder.

9. A fastener pin, comprising:

a head at a topmost end, said head being the greatest diameter of the fastener;

a shoulder extending downward from said head, said shoulder including a displacer for displacing material of a host object;

a broaching section of rectangular lateral cross-section located immediately below said displacer for cutting a rectangular profile into a round installation hole in the host object; and

a tapered tip at a bottommost end of the fastener.

10. The fastener pin of claim 9 wherein said rectangular lateral cross-section is square.

11. The fastener pin of claim 10 wherein said tapered tip has a rectangular pyramid shape.

12. The fastener of claim 11 further described in that said tapered tip is defined by a square pyramid which is rotated radially out of alignment with the remainder of the other fastener features all having parallel side edges.

13. The fastener pin of claim 12 where said pin is one of a series of substantially identical pins attached at severable joints in a continuous string of fasteners.

14. The fastener pin of claim 13 where said pins are attached toe-to-head at the severable joints.

CA 2843732 2018-06-26

FIGURE 1

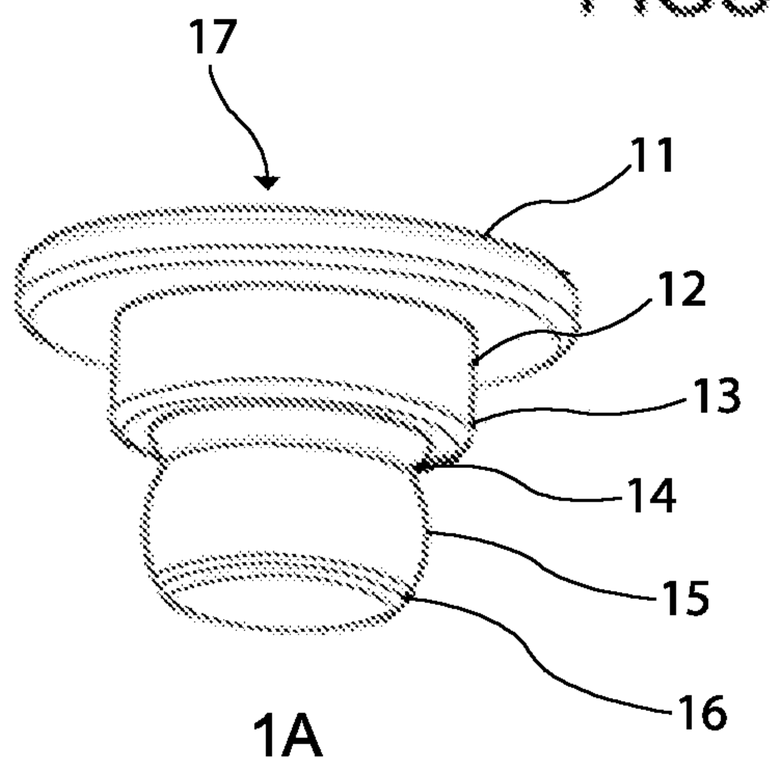

1A

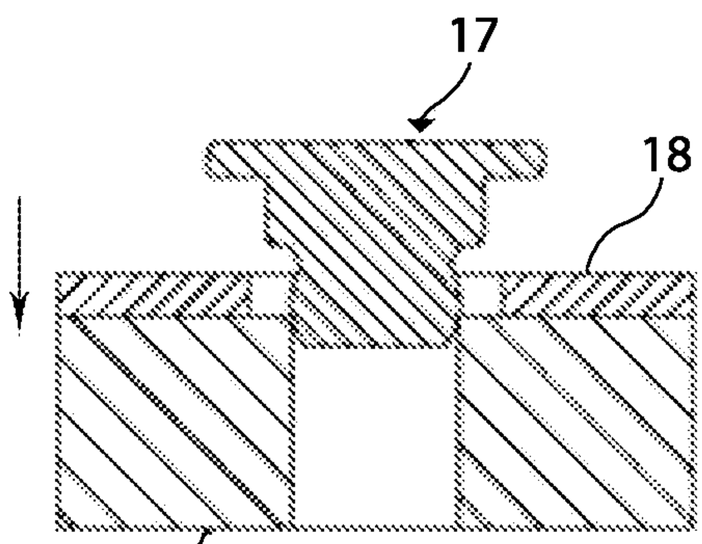

1B

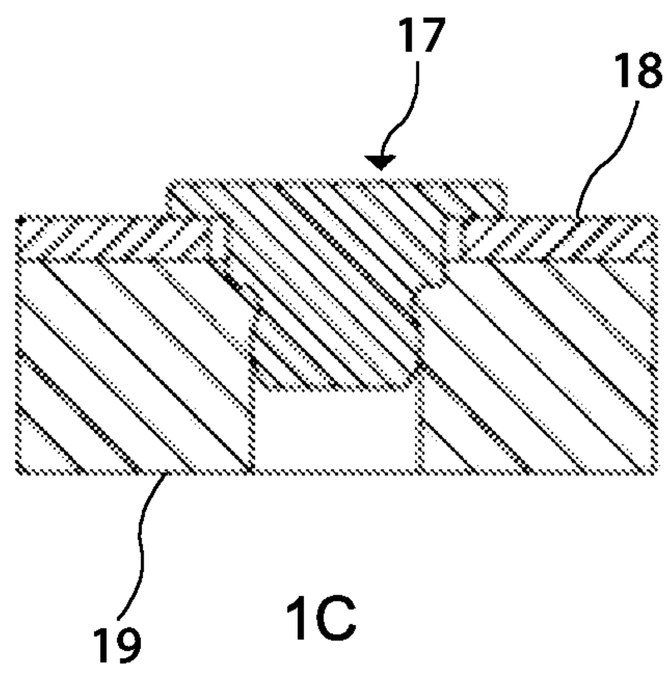

1C

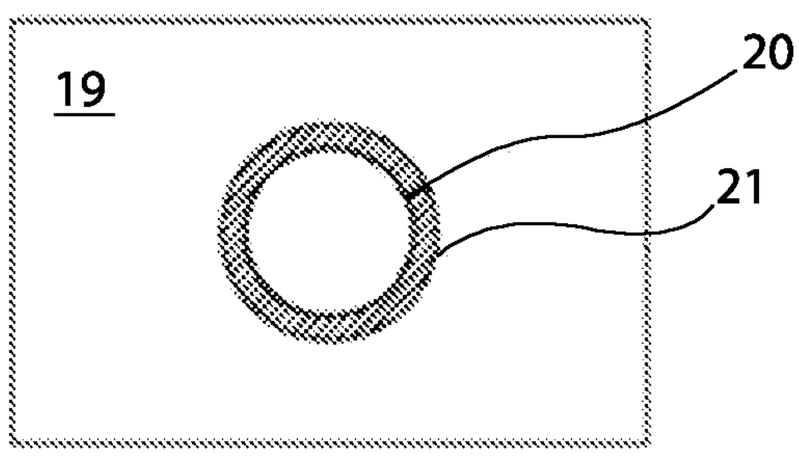

1D

FIGURE 2

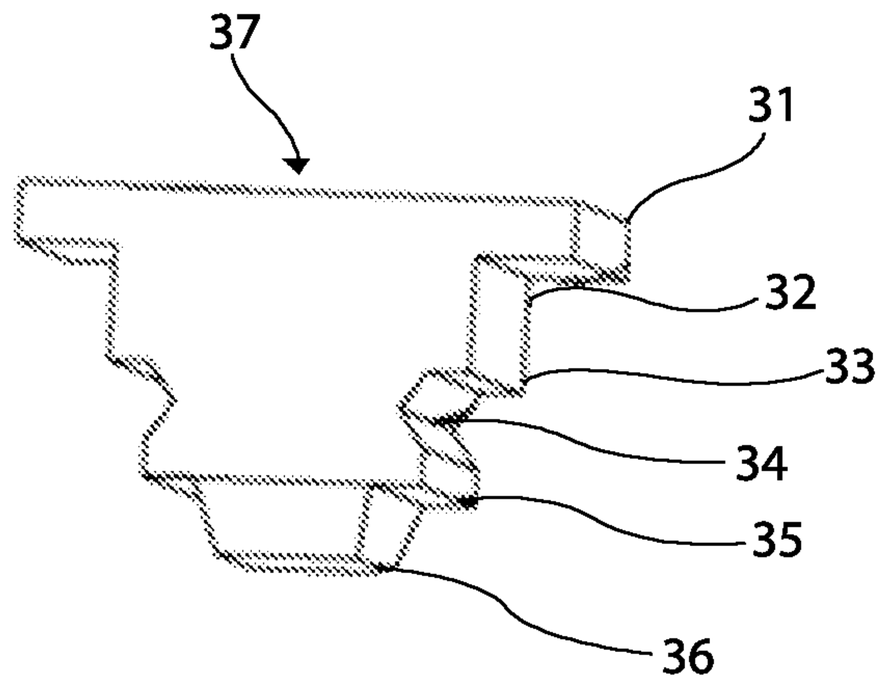

2A

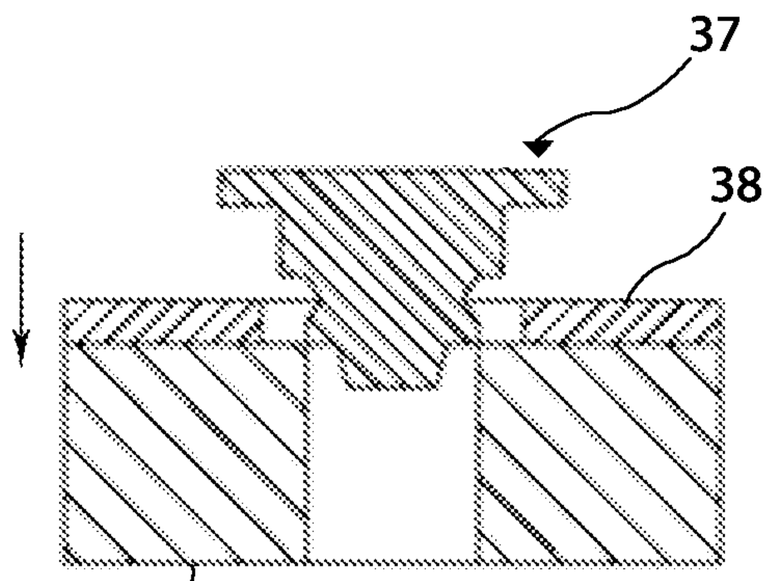

2B

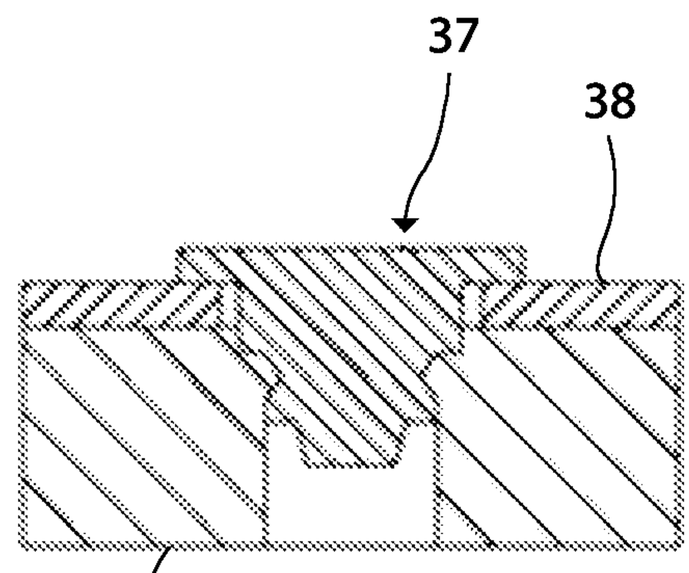

2C

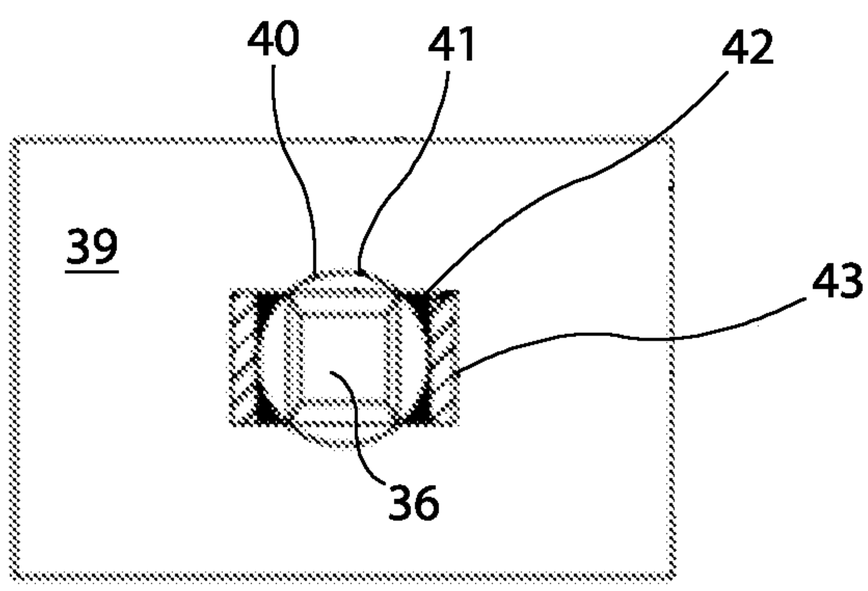

2D

FIGURE 3

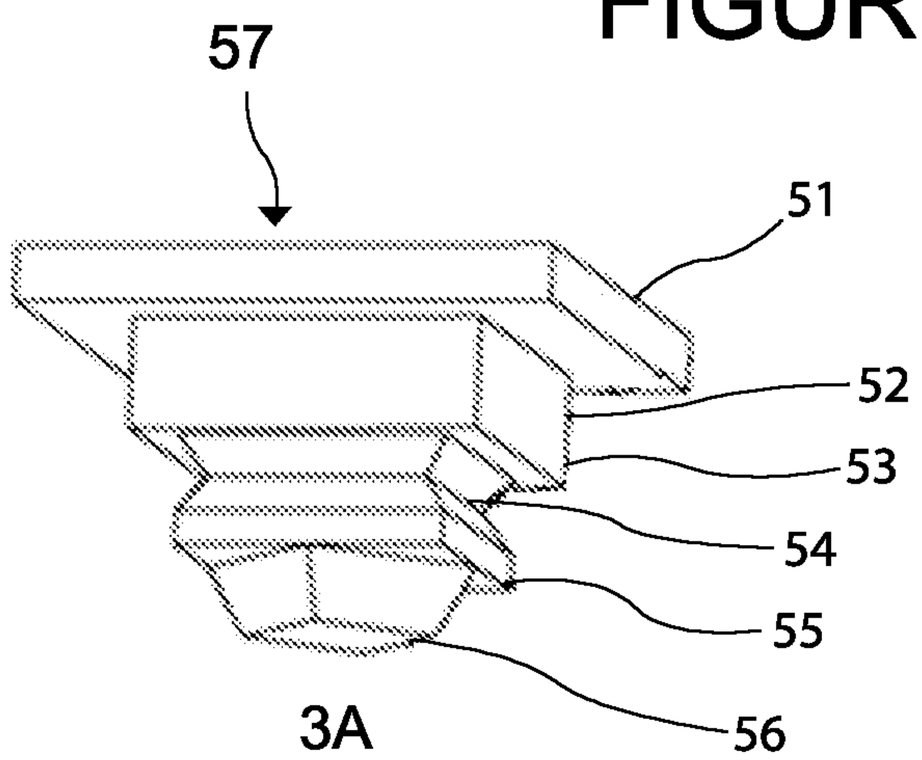

3A

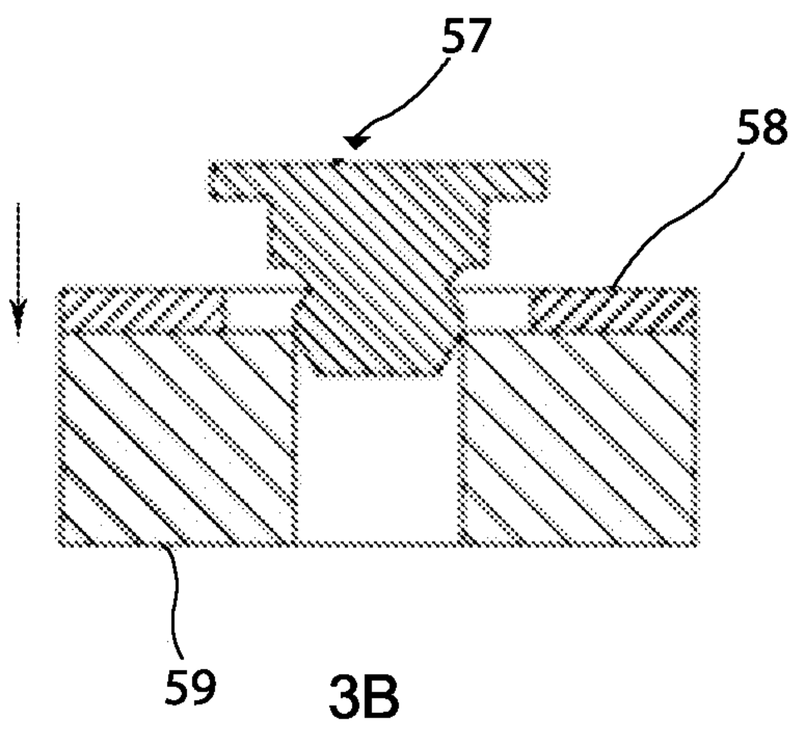

3B

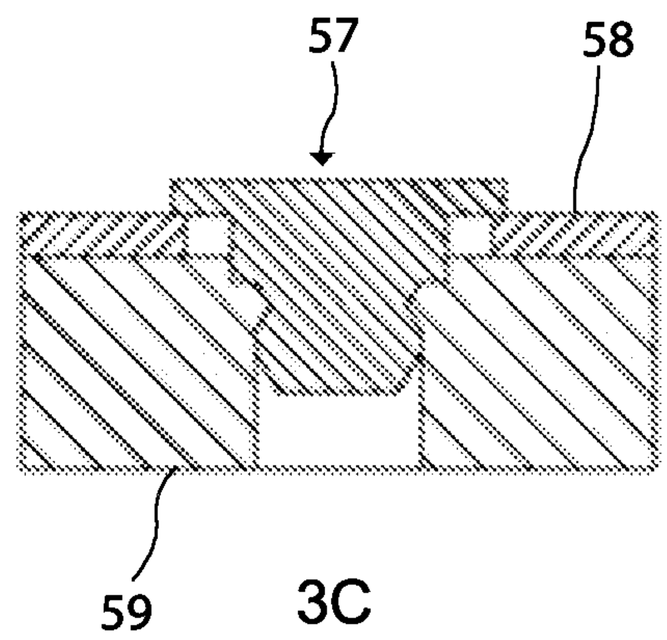

3C

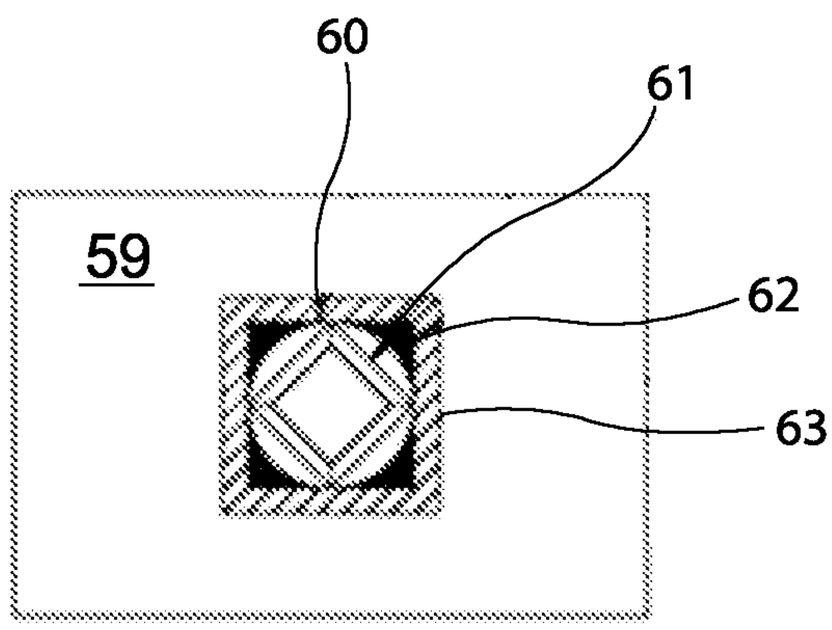

3D

FIGURE 4

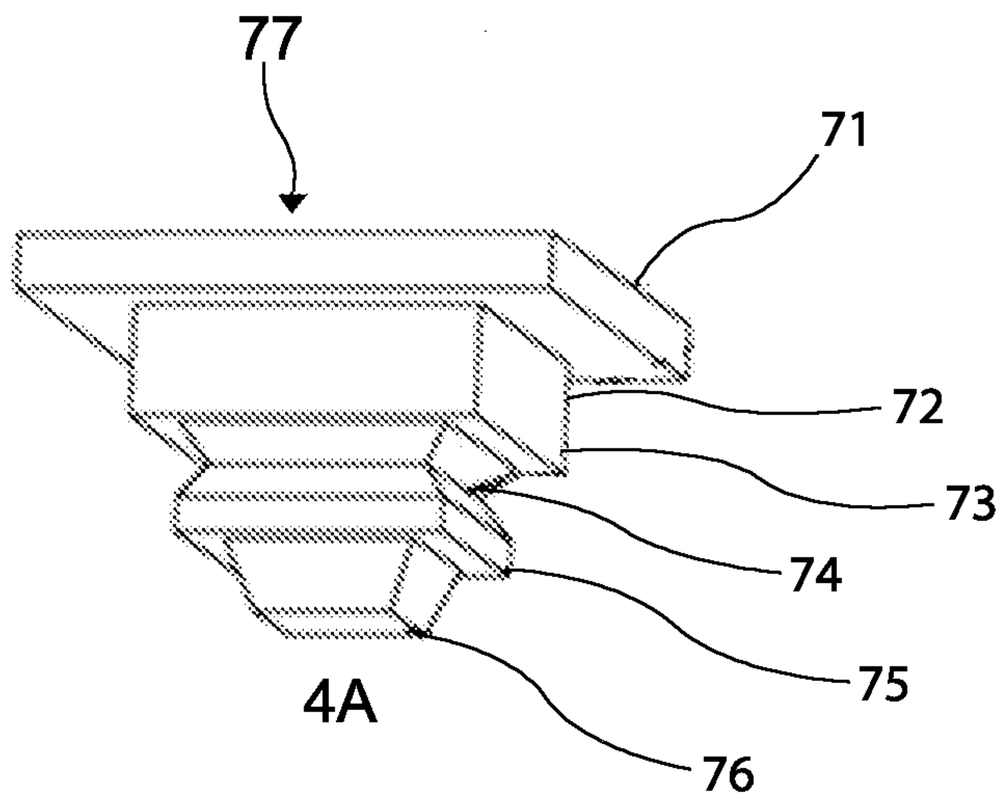

4A

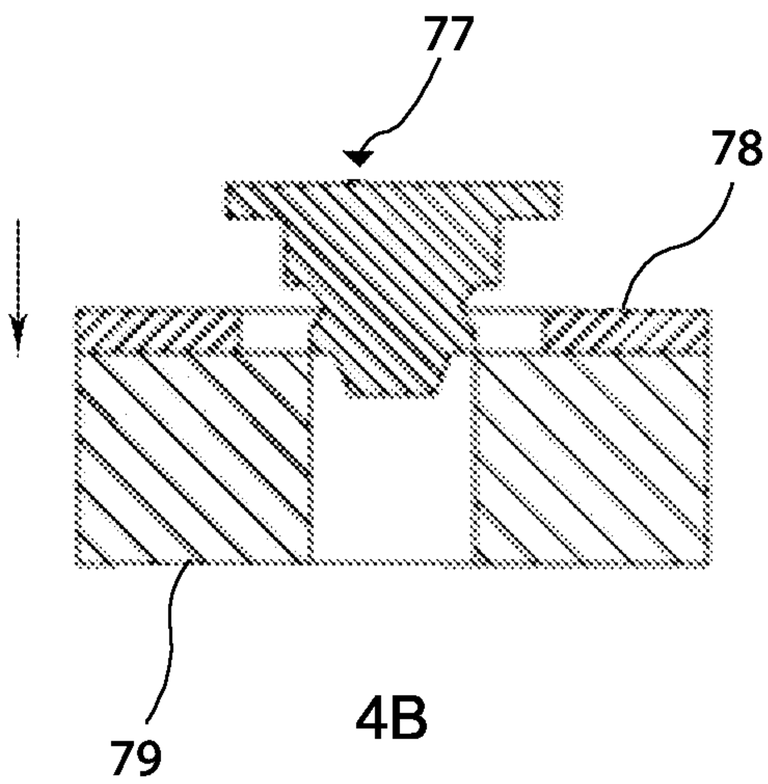

4B

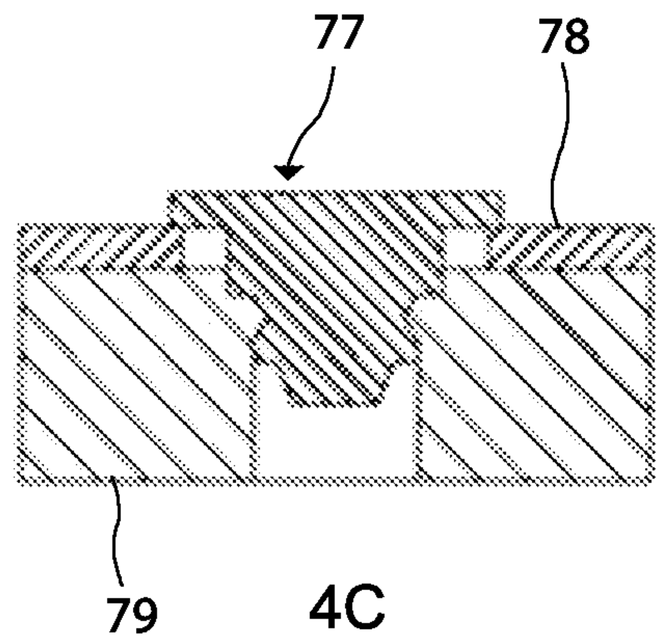

4C

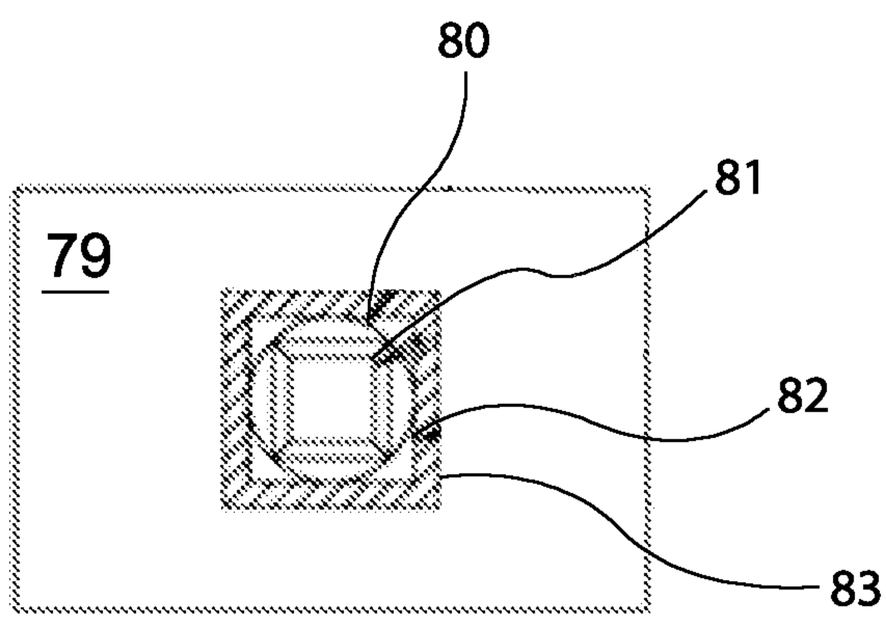

4D

FIGURE 5

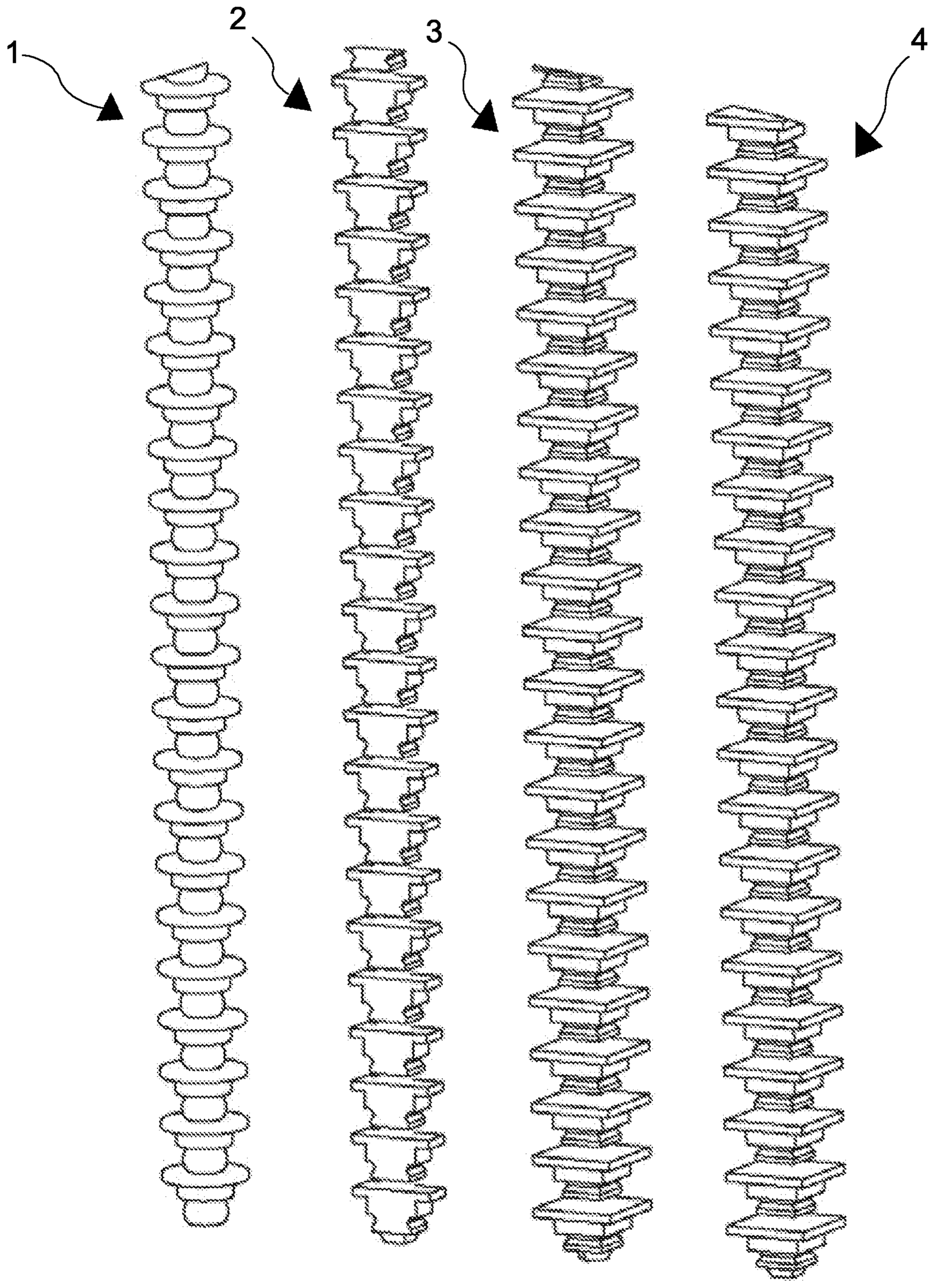

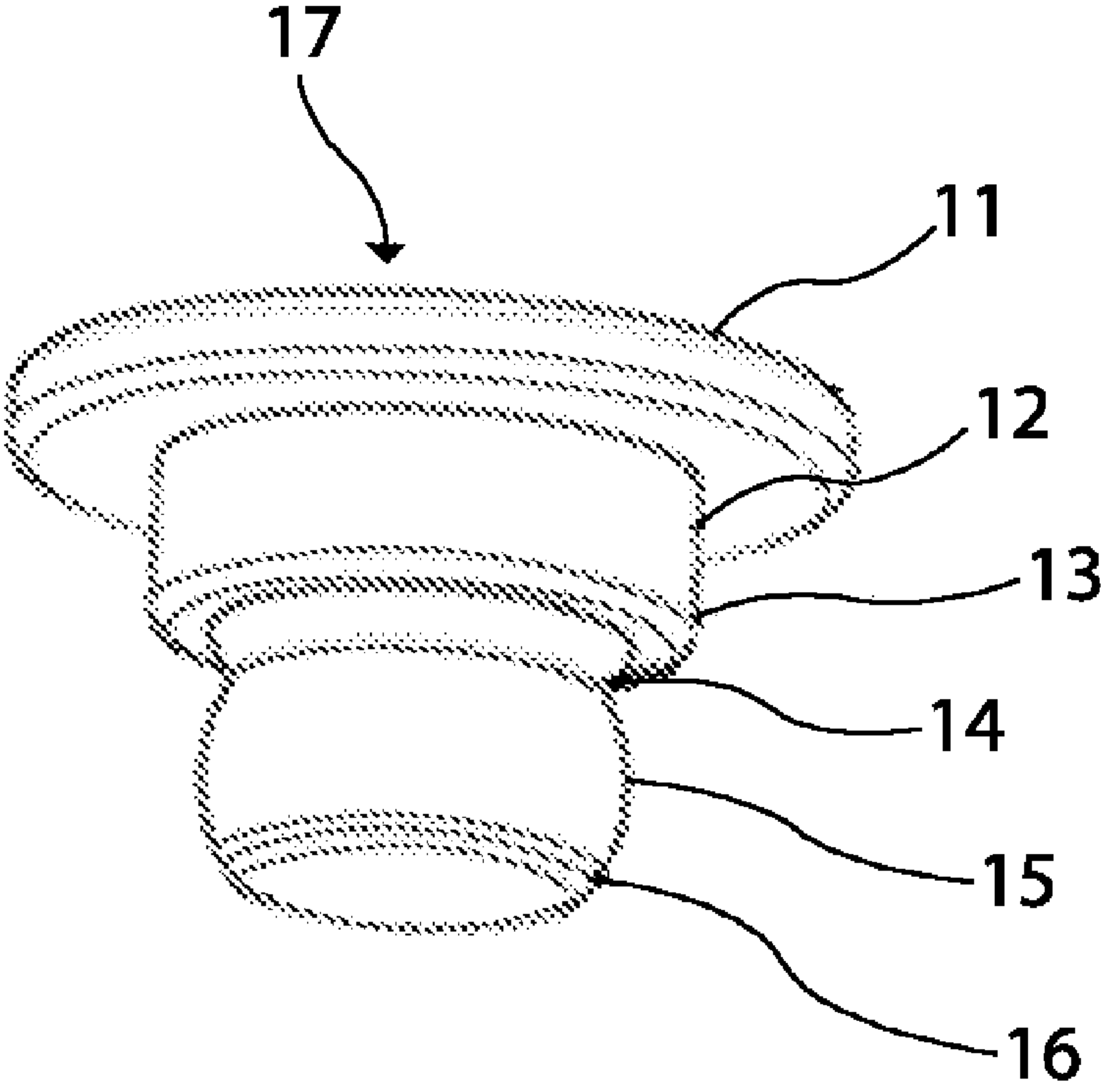
17
11
12
13
14
15
16