US00D347236S

United States Patent [19]

Ooi et al.

[11] Patent Number: Des. 347,236

[45] Date of Patent: ** May 24, 1994

[54] **COMBINED VIDEO TAPE RECORDER AND CAMERA**

[75] Inventors: **Hiroshi Ooi; Seiji Kurokawa**, both of Tochigi, Japan

[73] Assignee: **Sharp Kabushiki Kaisha**, Osaka, Japan

[**] Term: **14 Years**

[21] Appl. No.: **7,281**

[22] Filed: **Apr. 21, 1993**

[30] **Foreign Application Priority Data**

Oct. 21, 1992 [JP] Japan 4-30974

[52] **U.S. Cl.** **D16/202**

[58] **Field of Search** 352/34, 242; 354/82, 354/288; 358/229, 906, 909; D16/200-206, 208

[56] **References Cited**

U.S. PATENT DOCUMENTS

D. 260,894	9/1981	Ellermeier	D16/202
D. 288,811	3/1987	Kurokawa et al.	D16/202
D. 337,341	7/1993	Masuda	D16/202
D. 337,778	7/1993	Matsumura	D16/202
4,625,243	11/1986	Takubo	358/229

Primary Examiner—Melvin B. Feifer
Assistant Examiner—Adir Aronovich
Attorney, Agent, or Firm—Nixon & Vanderhye

[57] **CLAIM**

The ornamental design for a combined video tape recorder and camera, as shown and described.

DESCRIPTION

FIG. **1** is a top, right side and rear perspective view of a combined video tape recorder and camera according to our design;
FIG. **2** is a top plan view thereof;
FIG. **3** is a bottom plan view thereof;
FIG. **4** is a left side elevational view thereof;
FIG. **5** is a right side elevational view thereof;
FIG. **6** is a front elevational view thereof; and,
FIG. **7** is a rear elevational view thereof.

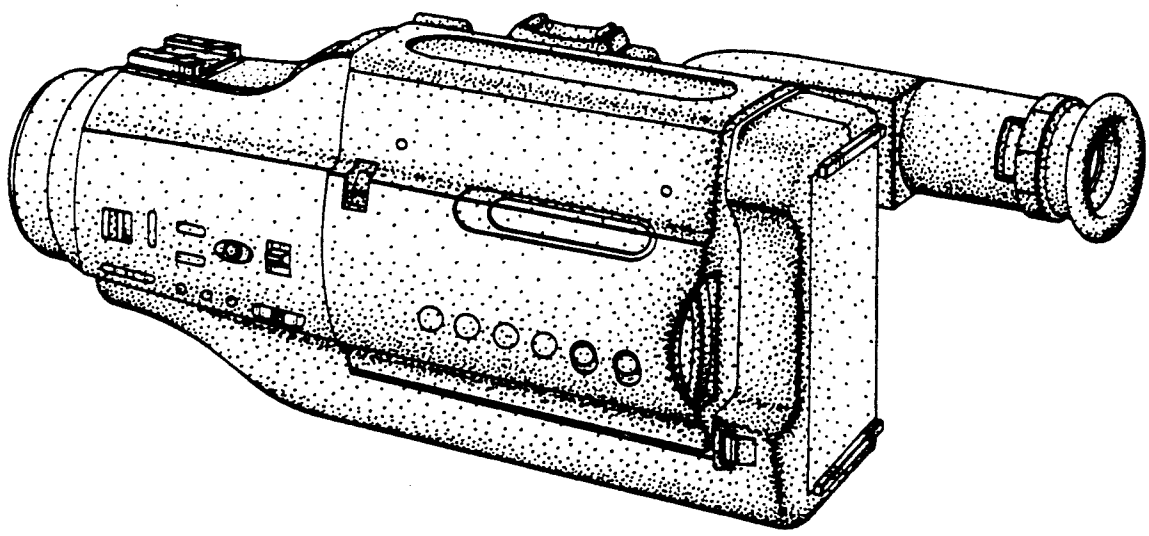

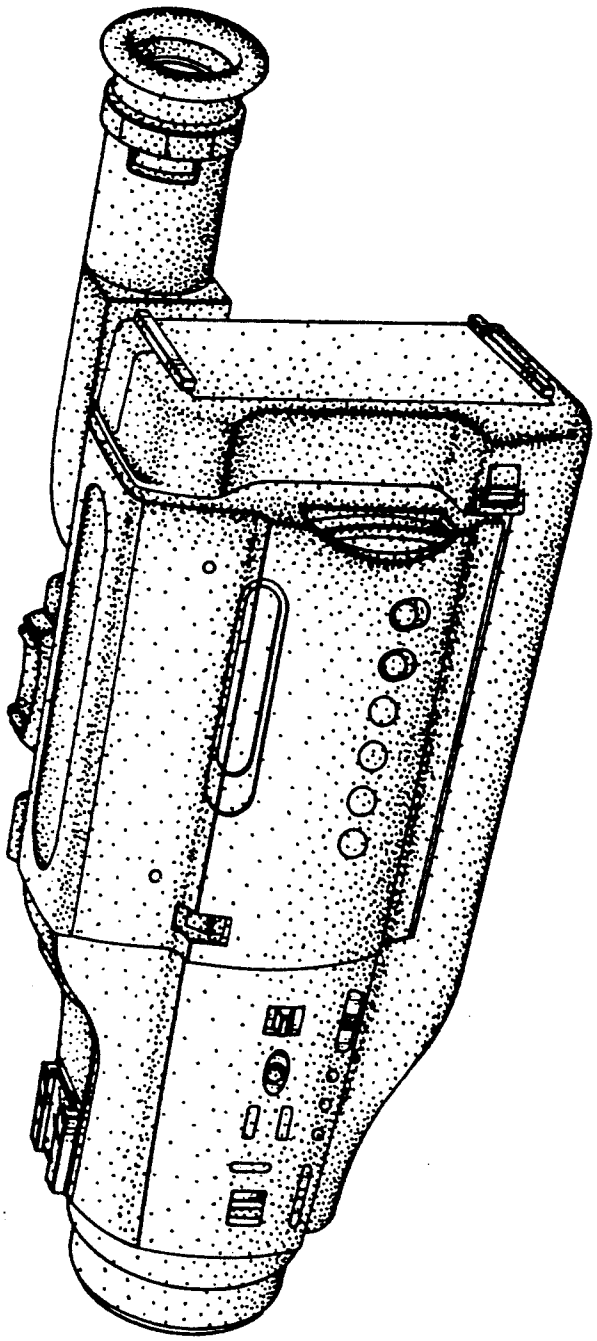

Fig. 1

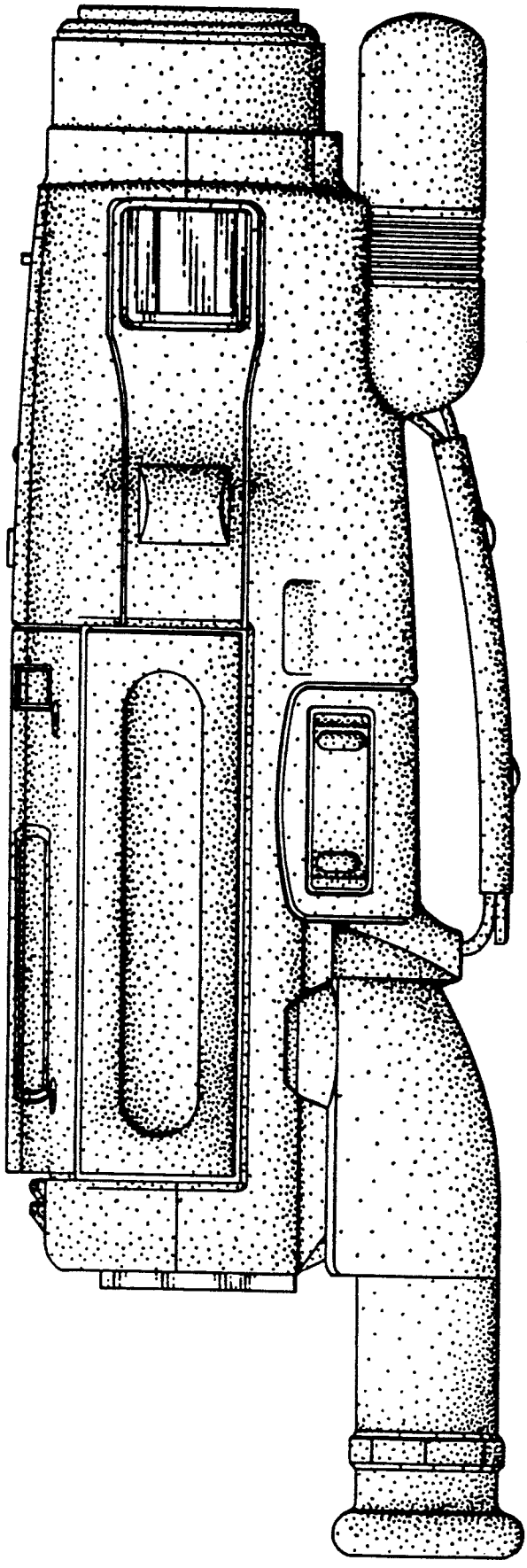

Fig. 2

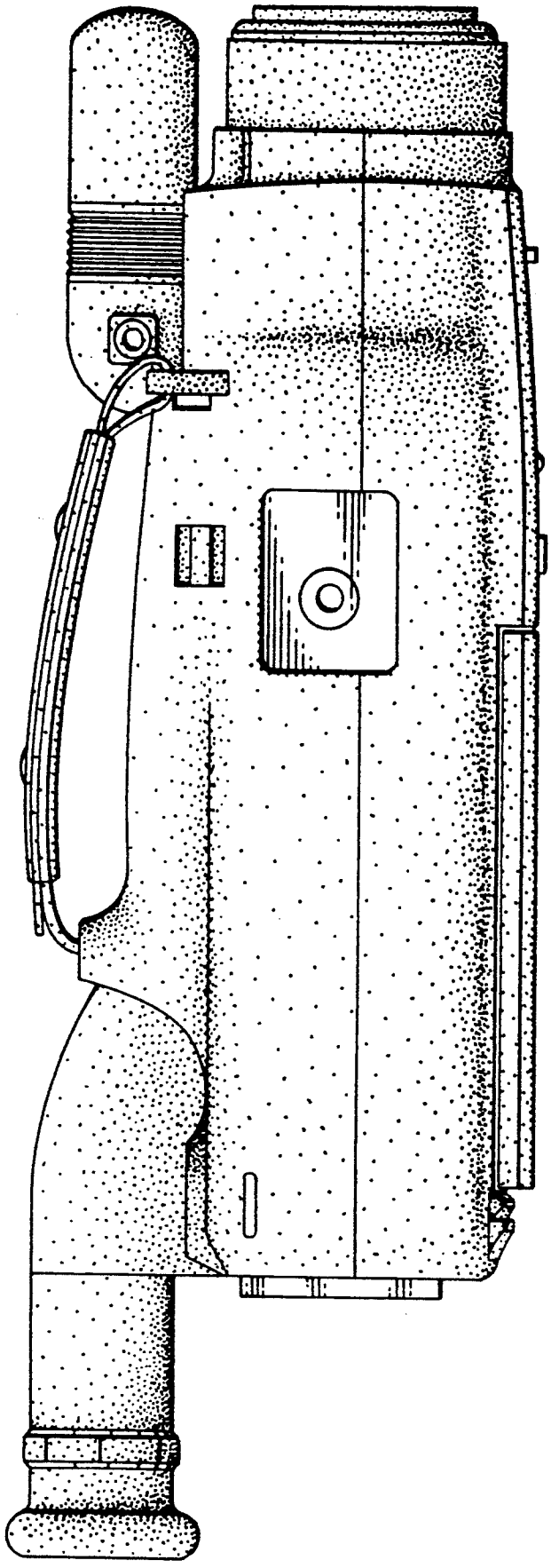

Fig. 3

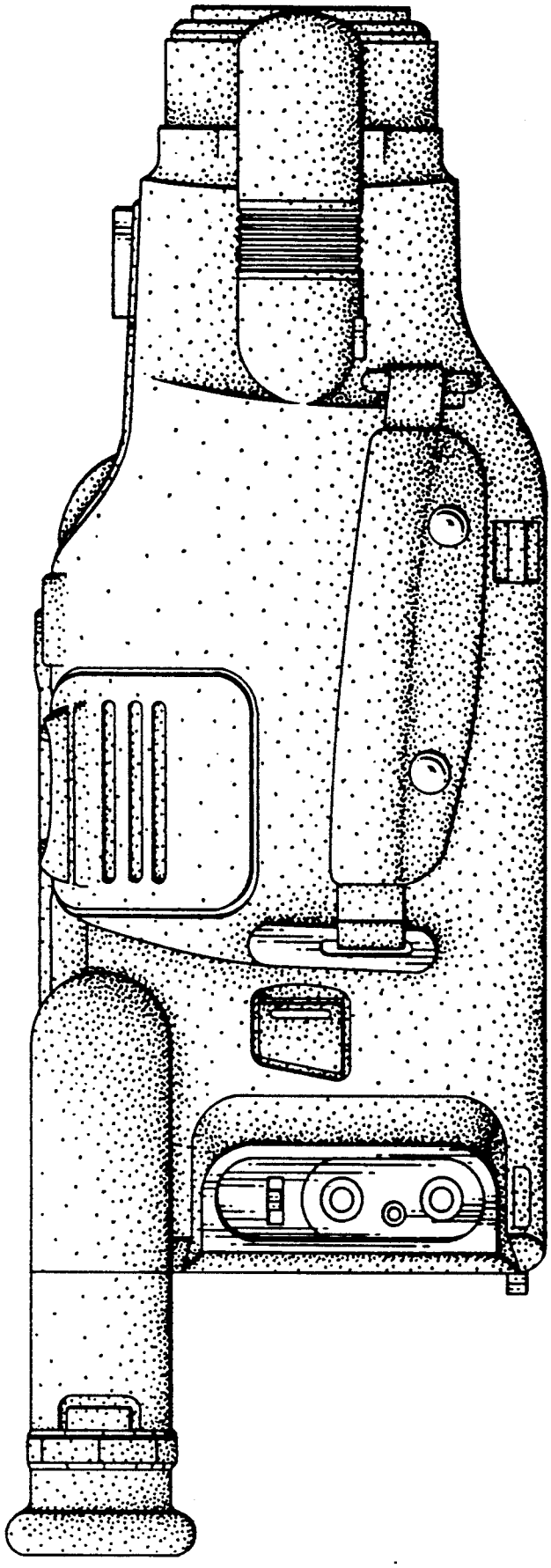

Fig. 4

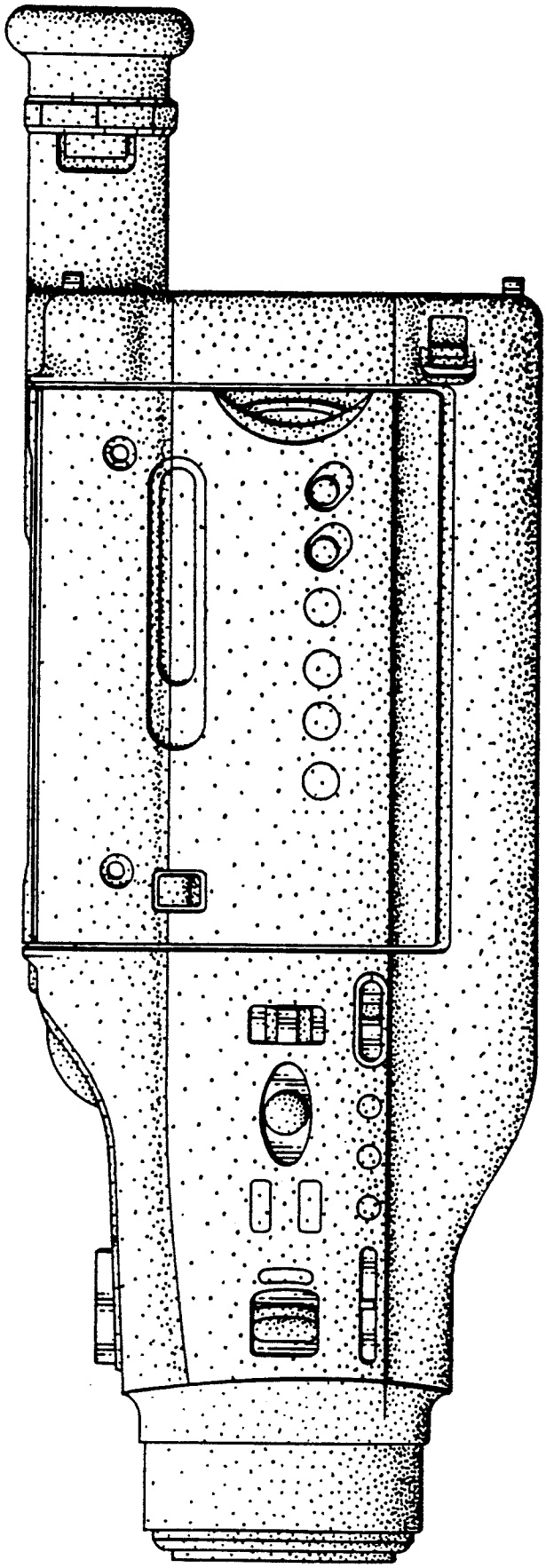

Fig. 5

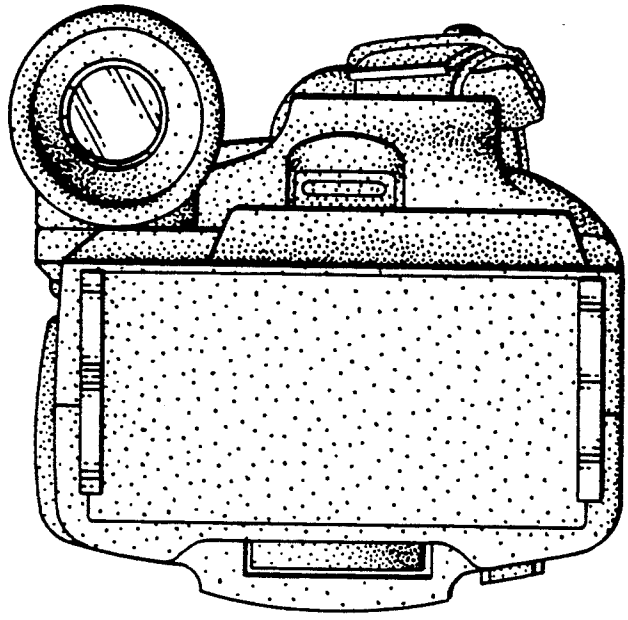

Fig. 7

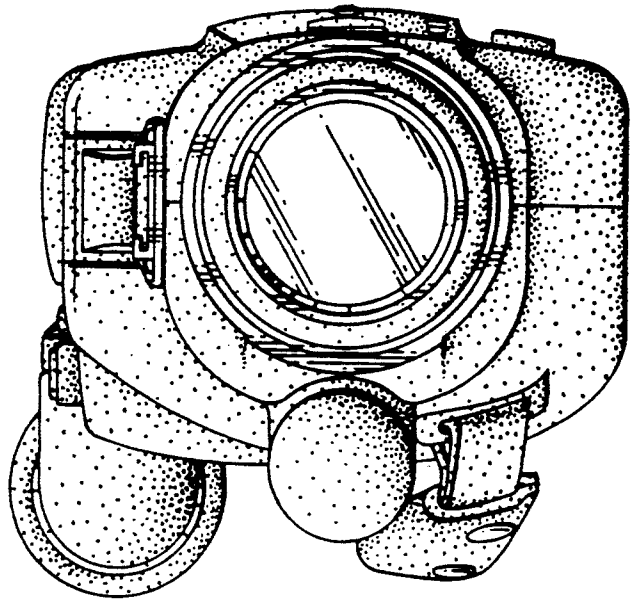

Fig. 6