(12) INTERNATIONAL APPLICATION PUBLISHED UNDER THE PATENT COOPERATION TREATY (PCT)

(19) World Intellectual Property Organization
International Bureau

(43) International Publication Date
25 January 2024 (25.01.2024)

WIPO | PCT

(10) International Publication Number
WO 2024/020113 A1

(51) International Patent Classification:
H02J 50/80 (2016.01)

(21) International Application Number:
PCT/US2023/028172

(22) International Filing Date:
19 July 2023 (19.07.2023)

(25) Filing Language: English

(26) Publication Language: English

(30) Priority Data:
17/814,099 21 July 2022 (21.07.2022) US
PCT/US2022/038871
29 July 2022 (29.07.2022) US

(71) Applicant: **APPLE INC.** [US/US]; One Apple Park Way, Cupertino, California 95014 (US).

(72) Inventors: **NARAYANAN, Sriram**; Apple Inc., One Apple Park Way, Cupertino, California 95014 (US). **ZHOU, Xing**; Apple Inc., One Apple Park Way, Cupertino, California 95014 (US). **SAFAEE, Alireza**; Apple Inc., One Apple Park Way, Cupertion, California 95014 (US). **ABUKHALAF, Zaid A**; Apple Inc., One Apple Park Way, Cupertino, California 95014 (US).

(74) Agent: **ALLEN III, Billy C.** et al.; P.O. Box 692289, Houston, Texas 77269 (US).

(81) Designated States *(unless otherwise indicated, for every kind of national protection available)*: AE, AG, AL, AM, AO, AT, AU, AZ, BA, BB, BG, BH, BN, BR, BW, BY, BZ, CA, CH, CL, CN, CO, CR, CU, CV, CZ, DE, DJ, DK, DM, DO, DZ, EC, EE, EG, ES, FI, GB, GD, GE, GH, GM, GT, HN, HR, HU, ID, IL, IN, IQ, IR, IS, IT, JM, JO, JP, KE, KG, KH, KN, KP, KR, KW, KZ, LA, LC, LK, LR, LS, LU, LY, MA, MD, MG, MK, MN, MU, MW, MX, MY, MZ, NA,

(54) **Title:** ENHANCED COMMUNICATIONS FOR WIRELESS POWER TRANSFER

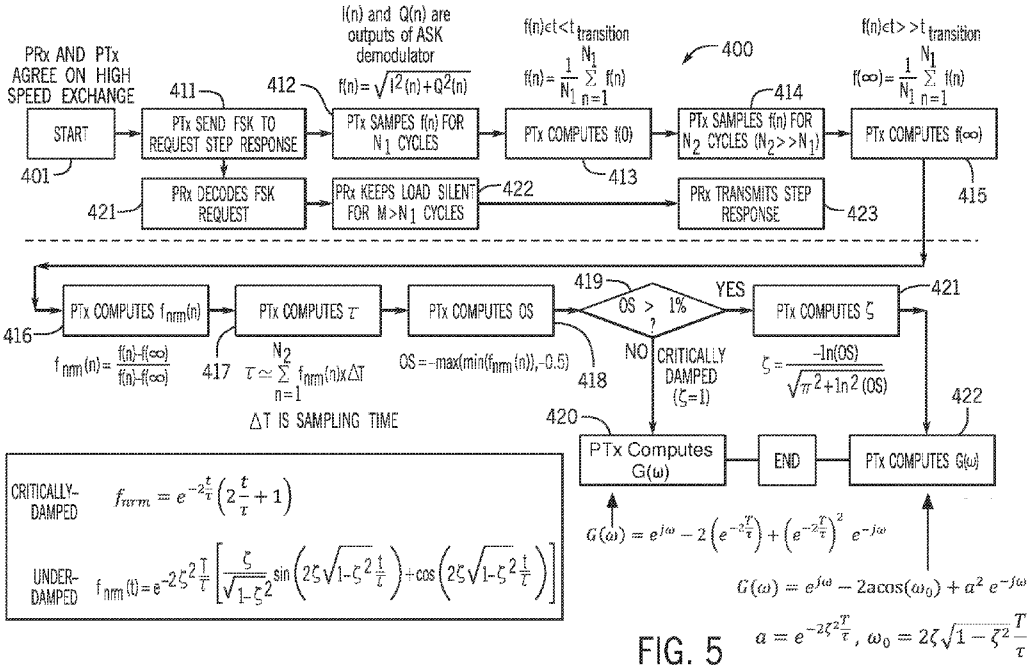

FIG. 5

(57) **Abstract:** A wireless power transmitter can receive the results of a characterizing signal transmitted by the wireless power receiver, compute at least two parameters of a model characterizing an in-band communications channel based on the received results of the characterizing signal transmitted by the wireless power receiver, compute a plurality of equalizing filter taps from the at least two parameters, and apply the computed equalizing filter to subsequent signals received by the wireless power transmitter via the in-band communications channel. A first parameter can correspond to a time constant of the channel, and a second parameter can correspond to a damping value of the communications channel. The wireless power transmitter can transmit to a wireless power receiver a request to transmit a characterizing signal through the in-band communication channel, wherein the characterizing signal transmitted by the wireless power receiver is sent in response to the transmitted request.

[Continued on next page]

WO 2024/020113 A1

NG, NI, NO, NZ, OM, PA, PE, PG, PH, PL, PT, QA, RO, RS, RU, RW, SA, SC, SD, SE, SG, SK, SL, ST, SV, SY, TH, TJ, TM, TN, TR, TT, TZ, UA, UG, US, UZ, VC, VN, WS, ZA, ZM, ZW.

(84) **Designated States** *(unless otherwise indicated, for every kind of regional protection available)*: ARIPO (BW, CV, GH, GM, KE, LR, LS, MW, MZ, NA, RW, SC, SD, SL, ST, SZ, TZ, UG, ZM, ZW), Eurasian (AM, AZ, BY, KG, KZ, RU, TJ, TM), European (AL, AT, BE, BG, CH, CY, CZ, DE, DK, EE, ES, FI, FR, GB, GR, HR, HU, IE, IS, IT, LT, LU, LV, MC, ME, MK, MT, NL, NO, PL, PT, RO, RS, SE, SI, SK, SM, TR), OAPI (BF, BJ, CF, CG, CI, CM, GA, GN, GQ, GW, KM, ML, MR, NE, SN, TD, TG).

Declarations under Rule 4.17:

— *as to applicant's entitlement to apply for and be granted a patent (Rule 4.17(ii))*

— *as to the applicant's entitlement to claim the priority of the earlier application (Rule 4.17(iii))*

Published:

— *with international search report (Art. 21(3))*

— *before the expiration of the time limit for amending the claims and to be republished in the event of receipt of amendments (Rule 48.2(h))*

ENHANCED COMMUNICATIONS FOR WIRELESS POWER TRANSFER

CROSS-REFERENCE TO RELATED APPLICATIONS

[0001] This application claims priority to U.S. Provisional Application No. 63/230,190, filed August 6, 2021, entitled, "ENHANCED COMMUNICATIONS FOR WIRELESS POWER TRANSFER," U.S. Patent Application No. 17/814,099, filed July 21, 2022, entitled, "ENHANCED COMMUNICATIONS FOR WIRELESS POWER TRANSFER," and PCT Application PCT/US22/38871, filed July 29, 2022, entitled, "ENHANCED COMMUNICATION FOR WIRELESS POWER TRANSFER," each of which is hereby incorporated by reference in its entirety for all purposes.

BACKGROUND

[0002] Wireless power transfer (WPT) systems, including inductive power transfer (IPT) systems, may rely on "in-band" communications, in which the transferred power is used to establish a communications channel between a power transmitting device, i.e., power transmitter (PTx), and a power receiving device, i.e., power receiver (PRx). Various arrangements are possible, including various embodiments in which the power transmitter (PTx) can modulate certain electrical characteristics of the power delivered, such as voltage, frequency, etc., to convey encoded information to the power receiver (PRx), which is able to detect the changes in electrical characteristics (i.e., modulation) imposed by the PTx. Likewise, the power receiver (PRx) can modulate certain electrical characteristics of the power received, such as voltage, frequency, etc., to convey encoded information to the power transmitter (PTx), which is likewise able to detect the changes in electrical characteristics (i.e., modulation) imposed by the PRx. In some applications, the physical construction and configuration of the devices, as well as the electrical operating conditions may impose bandwidth limitations on the communications channel that are below a desired communications bandwidth.

SUMMARY

[0003] Thus, it would be advantageous to provide wireless power transfer devices and techniques that are able to adapt to various physical configurations and electrical operating conditions to enhance the available bandwidth of the communications channel.

[0004] A method performed by one or more processing elements of a wireless power transmitter can include receiving the results of a characterizing signal transmitted by the wireless power receiver, computing at least two parameters of a model characterizing an in-band communications channel based on the received results of the characterizing signal transmitted by the wireless power receiver, computing a plurality of equalizing filter taps from the at least two parameters, and applying the computed equalizing filter to subsequent signals received by the wireless power transmitter via the in-band communications channel. A first parameter can correspond to a time constant of the channel, and a second parameter can correspond to a damping value of the communications channel. Computing the second parameter can include determining whether the wireless power transfer system is underdamped. Determining whether the wireless power transfer system is underdamped can include computing an overshoot resulting from the characterizing signal transmitted by the wireless power receiver. The second parameter can be set to 1 if the wireless power transfer system is not underdamped. The characterizing signal can be a step signal. The method can further include transmitting to a wireless power receiver a request to transmit a characterizing signal through the in-band communication channel, wherein the characterizing signal transmitted by the wireless power receiver is sent in response to the transmitted request.

[0005] A wireless power transmitter can include an inverter that receives a DC input voltage and produces an AC output voltage, a wireless power transmitter coil that receives the AC output voltage from the inverter and delivers power to a wireless power receiver by magnetic coupling, controller and communications circuitry that controls the inverter and provides in-band communications with the wireless power receiver via the wireless power transmitter coil. The controller and communications circuitry can be configured to receive the results of a characterizing signal transmitted by the wireless power receiver, compute at least two parameters of a model characterizing an in-band communications channel based on the received results of the characterizing signal transmitted by the wireless power receiver, compute a plurality of equalizing

filter taps from the at least two parameters, and apply the computed equalizing filter taps to subsequent signals received by the wireless power transmitter via the in-band communications channel. A first parameter can correspond to a time constant of the channel, and a second parameter can correspond to a damping value of the communications channel. The controller and communication circuitry can be further configured to compute the second parameter in part by determining whether the wireless power transfer system is underdamped. The controller and communication circuitry can be further configured to determine whether the wireless power transfer system is underdamped by computing an overshoot resulting from the characterizing signal transmitted by the wireless power receiver. The controller and communication circuitry can be further configured to set the second parameter to 1 if the wireless power transfer system is not underdamped. The characterizing signal can be a step signal. The controller and communication circuitry can be further configured to transmit to the wireless power receiver a request to transmit a characterizing signal through the in-band communication channel, and wherein the characterizing signal transmitted by the wireless power receiver is sent in response to the transmitted request.

[0006] A wireless power receiver can include a wireless power receiver coil that receives power from a wireless power transmitter by magnetic coupling, a rectifier that receives an AC voltage from the wireless power receiver coil and produces a DC output voltage to power a load, controller and communications circuitry that controls the rectifier and provides in-band communications with the wireless power transmitter via the wireless power receiver coil, wherein the controller and communications circuitry can be configured to transmit a characterizing signal to the wireless power transmitter. The controller and communications circuitry can provide in-band communications with the wireless power transmitter via load modulation. The load modulation can result in amplitude shift keying of the received power. The control and communications circuitry can be configured to transmit the characterizing signal to the wireless power transmitter responsive to a request received from the wireless power transmitter. The request received from the wireless power transmitter can be a frequency shift keyed signal. The characterizing signal can be a step signal.

[0007] A method performed by one or more processing elements of a wireless power transmitter can include receiving the results of a characterizing signal transmitted by the wireless power receiver; computing at least two parameters of a model characterizing an in-band

communications channel based on a subset of the received results of the characterizing signal transmitted by the wireless power receiver, wherein a first parameter corresponds to a time constant of the channel, and a second parameter corresponds to a damping value of the communications channel; computing a plurality of equalizing filter taps from the at least two parameters; and applying the computed equalizing filter to subsequent signals received by the wireless power transmitter via the in-band communications channel. The subset of the received results can correspond to samples having values within a predetermined window of the characterizing signal. The predetermined window can be defined by first and second thresholds. The first threshold can be 10%, and the second threshold can be 90%. The characterizing signal can be a step signal. The characterizing signal can be a known characteristic of a communication protocol used by the in-band communications channel. The known characteristic can include a stop bit at the end of a data packet. The method can further include transmitting to a wireless power receiver a request to transmit a characterizing signal through the in-band communication channel, wherein the characterizing signal transmitted by the wireless power receiver is sent in response to the transmitted request.

[0008] A wireless power transmitter can include an inverter that receives a DC input voltage and produces an AC output voltage; a wireless power transmitter coil that receives the AC output voltage from the inverter and delivers power to a wireless power receiver by magnetic coupling; controller and communications circuitry that controls the inverter and provides in-band communications with the wireless power receiver via the wireless power transmitter coil, wherein the controller and communications circuitry that: receives the results of a characterizing signal transmitted by the wireless power receiver; computes at least two parameters of a model characterizing an in-band communications channel based on a subset of the received results of the characterizing signal transmitted by the wireless power receiver, wherein a first parameter corresponds to a time constant of the channel, and a second parameter corresponds to a damping value of the communications channel; computes a plurality of equalizing filter taps from the at least two parameters; and applies the computed equalizing filter taps to subsequent signals received by the wireless power transmitter via the in-band communications channel. The subset of the received results can correspond to samples having values within a predetermined window of the characterizing signal. The predetermined window can be defined by first and second thresholds. The first threshold can be 10%, and the second threshold can be 90%. The characterizing signal

can be a step signal. The characterizing signal can be a known characteristic of a communication protocol used by the in-band communications channel. The known characteristic can include a stop bit at the end of a data packet.

[0009] A method performed by one or more processing elements of a wireless power transmitter can include receiving the results of a characterizing signal transmitted by the wireless power receiver, wherein the characterizing signal is a known characteristic of a communication protocol used by the in-band communications channel; computing at least two parameters of a model characterizing an in-band communications channel based on the received results of the characterizing signal transmitted by the wireless power receiver, wherein a first parameter corresponds to a time constant of the channel, and a second parameter corresponds to a damping value of the communications channel; computing a plurality of equalizing filter taps from the at least two parameters; and applying the computed equalizing filter to subsequent signals received by the wireless power transmitter via the in-band communications channel. The known characteristic includes a stop bit at the end of a data packet.

[0010] A wireless power transmitter can include an inverter that receives a DC input voltage and produces an AC output voltage; a wireless power transmitter coil that receives the AC output voltage from the inverter and delivers power to a wireless power receiver by magnetic coupling; controller and communications circuitry that controls the inverter and provides in-band communications with the wireless power receiver via the wireless power transmitter coil, wherein the controller and communications circuitry that: receives the results of a characterizing signal transmitted by the wireless power receiver, wherein the characterizing signal is a known characteristic of a communication protocol used by the in-band communications channel; computes at least two parameters of a model characterizing an in-band communications channel based on the received results of the characterizing signal transmitted by the wireless power receiver, wherein a first parameter corresponds to a time constant of the channel, and a second parameter corresponds to a damping value of the communications channel; computes a plurality of equalizing filter taps from the at least two parameters; and applies the computed equalizing filter taps to subsequent signals received by the wireless power transmitter via the in-band communications channel. The known characteristic can include a stop bit at the end of a data packet.

BRIEF DESCRIPTION OF THE DRAWINGS

[0011] Figure 1 illustrates a block diagram of a wireless power transfer system.

[0012] Figure 2 illustrates a simplified schematic of a wireless power transfer system.

[0013] Figure 3 illustrates a flowchart of a first portion of an inductive power transfer communications channel equalization technique including exemplary characterization waveforms.

[0014] Figure 4 illustrates a flowchart of a second portion of an inductive power transfer communications equalization technique including exemplary resulting equalization filters.

[0015] Figure 5 illustrates a more detailed flowchart of an inductive power transfer communications channel equalization technique.

[0016] Figure 6 illustrates messaging associated with a wireless power transfer system.

[0017] Figure 7 illustrates messaging associated with training and equalization for high-speed communication in a wireless power transfer system.

[0018] Figure 8 illustrates a training and equalization technique with associated messaging in a wireless power transfer system with high-speed communications.

[0019] Figure 9 illustrates a channel estimation and equalization process for high-speed communications in a wireless power transfer system.

[0020] Figure 10 illustrates a modified channel estimation and equalization process in which samples below a first threshold or above a second threshold are discarded to improve accuracy of the calculated coefficients.

[0021] Figure 11 illustrates a modified channel estimation and equalization process in which known characteristics of a data stream are used as a characterizing signal.

DETAILED DESCRIPTION

[0022] In the following description, for purposes of explanation, numerous specific details are set forth to provide a thorough understanding of the disclosed concepts. As part of this description, some of this disclosure's drawings represent structures and devices in block diagram form for sake of simplicity. In the interest of clarity, not all features of an actual implementation are described in this disclosure. Moreover, the language used in this disclosure has been selected for readability

and instructional purposes, has not been selected to delineate or circumscribe the disclosed subject matter. Rather the appended claims are intended for such purpose.

[0023] Various embodiments of the disclosed concepts are illustrated by way of example and not by way of limitation in the accompanying drawings in which like references indicate similar elements. For simplicity and clarity of illustration, where appropriate, reference numerals have been repeated among the different figures to indicate corresponding or analogous elements. In addition, numerous specific details are set forth to provide a thorough understanding of the implementations described herein. In other instances, methods, procedures, and components have not been described in detail so as not to obscure the related relevant function being described. References to "an," "one," or "another" embodiment in this disclosure are not necessarily to the same or different embodiment, and they mean at least one. A given figure may be used to illustrate the features of more than one embodiment, or more than one species of the disclosure, and not all elements in the figure may be required for a given embodiment or species. A reference number, when provided in a given drawing, refers to the same element throughout the several drawings, though it may not be repeated in every drawing. The drawings are not to scale unless otherwise indicated, and the proportions of certain parts may be exaggerated to better illustrate details and features of the present disclosure.

[0024] Figure 1 illustrates a simplified block diagram of a wireless power transfer system 100. Wireless power transfer system includes a power transmitter (PTx) 110 that transfers power to a power receiver (PRx) 120 wirelessly, such as via inductive coupling 130. Power transmitter 110 may receive input power that is converted to an AC voltage having particular voltage and frequency characteristics by an inverter 114. Inverter 114 may be controlled by a controller/communications module 116 that operates as further described below. In various embodiments, the inverter controller and communications module may be implemented in a common system, such as a system based on a microprocessor, microcontroller, or the like. In other embodiments, the inverter controller may be implemented by a separate controller module and communications module that have a means of communication between them. Inverter 114 may be constructed using any suitable circuit topology (e.g., full bridge, half bridge, etc.) and may be implemented using any suitable semiconductor switching device technology (e.g., MOSFETs, IGBTs, etc. made using silicon, silicon carbide, or gallium nitride devices).

[0025] Inverter 114 may deliver the generated AC voltage to a transmitter coil 112. In addition to a wireless coil allowing magnetic coupling to the receiver, the transmitter coil block 112 illustrated in Fig. 1 may include tuning circuitry, such as additional inductors and capacitors, that facilitate operation of the transmitter in different conditions, such as different degrees of magnetic coupling to the receiver, different operating frequencies, etc. The wireless coil itself may be constructed in a variety of different ways. In some embodiments, the wireless coil may be formed as a winding of wire around a suitable bobbin. In other embodiments, the wireless coil may be formed as traces on a printed circuit board. Other arrangements are also possible and may be used in conjunction with the various embodiments described herein. The wireless transmitter coil may also include a core of magnetically permeable material (*e.g.*, ferrite) configured to affect the flux pattern of the coil in a way suitable to the particular application. The teachings herein may be applied in conjunction with any of a wide variety of transmitter coil arrangements appropriate to a given application.

[0026] PTx controller/communications module 116 may monitor the transmitter coil and use information derived therefrom to control the inverter 114 as appropriate for a given situation. For example, controller/communications module may be configured to cause inverter 114 to operate at a given frequency or output voltage depending on the particular application. In some embodiments, the controller/communications module may be configured to receive information from the PRx device and control inverter 114 accordingly. This information may be received via the power transmission coils (*i.e.*, in-band communication) or may be received via a separate communications channel (not shown, *i.e.*, out-of-band communication). For in-band communication, controller/communications module 116 may detect and decode signals imposed on the magnetic link (such as voltage, frequency, or load variations) by the PRx to receive information and may instruct the inverter to modulate the delivered power by manipulating various parameters of the generated voltage (such as voltage, frequency, etc.) to send information to the PRx. In some embodiments, controller/communications module may be configured to employ frequency shift keying (FSK) communications, in which the frequency of the inverter signal is modulated, to communicate data to the PRx. Controller/communications module 116 may be configured to detect amplitude shift keying (ASK) communications or load modulation-based communications from the PRx. In either case, the controller/communications module 126 may be configured to vary the current drawn on the receiver side to manipulate the waveform seen on the

Tx coil to deliver information to from the PRx to the PTx. For out-of-band communication, additional modules that allow for communication between the PTx and PRx may be provided, for example, WiFi, Bluetooth, or other radio links or any other suitable communications channel.

[0027] As mentioned above, controller/communications module 116 may be a single module, for example, provided on a single integrated circuit, or may be constructed from multiple modules/devices provided on different integrated circuits or a combination of integrated and discrete circuits having both analog and digital components. The teachings herein are not limited to any particular arrangement of the controller/communications circuitry.

[0028] PTx device 110 may optionally include other systems and components, such as a separate communications module 118. In some embodiments, comms module 118 may communicate with a corresponding module tag in the PRx via the power transfer coils. In other embodiments, comms module 118 may communicate with a corresponding module using a separate physical channel 138.

[0029] As noted above, wireless power transfer system also includes a wireless power receiver (PRx) 120. Wireless power receiver can include a receiver coil 122 that may be magnetically coupled 130 to the transmitter coil 112. As with transmitter coil 112 discussed above, receiver coil block 122 illustrated in Fig. 1 may include tuning circuitry, such as additional inductors and capacitors, that facilitate operation of the transmitter in different conditions, such as different degrees of magnetic coupling to the receiver, different operating frequencies, etc. The wireless coil itself may be constructed in a variety of different ways. In some embodiments, the wireless coil may be formed as a winding of wire around a suitable bobbin. In other embodiments, the wireless coil may be formed as traces on a printed circuit board. Other arrangements are also possible and may be used in conjunction with the various embodiments described herein. The wireless receiver coil may also include a core of magnetically permeable material (*e.g.*, ferrite) configured to affect the flux pattern of the coil in a way suitable to the particular application. The teachings herein may be applied in conjunction with any of a wide variety of receiver coil arrangements appropriate to a given application.

[0030] Receiver coil 122 outputs an AC voltage induced therein by magnetic induction via transmitter coil 112. This output AC voltage may be provided to a rectifier 124 that provides a DC output power to one or more loads associated with the PRx device. Rectifier 124 may be

controlled by a controller/communications module 126 that operates as further described below. In various embodiments, the rectifier controller and communications module may be implemented in a common system, such as a system based on a microprocessor, microcontroller, or the like. In other embodiments, the rectifier controller may be implemented by a separate controller module and communications module that have a means of communication between them. Rectifier 124 may be constructed using any suitable circuit topology (*e.g.*, full bridge, half bridge, etc.) and may be implemented using any suitable semiconductor switching device technology (*e.g.*, MOSFETs, IGBTs, etc. made using silicon, silicon carbide, or gallium nitride devices).

[0031] PRx controller/communications module 126 may monitor the receiver coil and use information derived therefrom to control the rectifier 124 as appropriate for a given situation. For example, controller/communications module may be configured to cause rectifier 124 to operate provide a given output voltage depending on the particular application. In some embodiments, the controller/communications module may be configured to send information to the PTx device to effectively control the power delivered to the receiver. This information may be received sent via the power transmission coils (*i.e.*, in-band communication) or may be sent via a separate communications channel (not shown, *i.e.*, out-of-band communication). For in-band communication, controller/communications module 126 may, for example, modulate load current or other electrical parameters of the received power to send information to the PTx. In some embodiments, controller/communications module 126 may be configured to detect and decode signals imposed on the magnetic link (such as voltage, frequency, or load variations) by the PTx to receive information from the PTx. In some embodiments, controller/communications module 126 may be configured to receive frequency shift keying (FSK) communications, in which the frequency of the inverter signal has been modulated to communicate data to the PRx. Controller/communications module 126 may be configured to generate amplitude shift keying (ASK) communications or load modulation-based communications from the PRx. In either case, the controller/communications module 126 may be configured to vary the current drawn on the receiver side to manipulate the waveform seen on the Tx coil to deliver information to from the PRx to the PTx. For out-of-band communication, additional modules that allow for communication between the PTx and PRx may be provided, for example, WiFi, Bluetooth, or other radio links or any other suitable communications channel.

[0032] As mentioned above, controller/communications module 126 may be a single module, for example, provided on a single integrated circuit, or may be constructed from multiple modules/devices provided on different integrated circuits or a combination of integrated and discrete circuits having both analog and digital components. The teachings herein are not limited to any particular arrangement of the controller/communications circuitry. PRx device 120 may optionally include other systems and components, such as a communications ("comms") module 128. In some embodiments, comms module 128 may communicate with a corresponding module in the PTx via the power transfer coils. In other embodiments, comms module 128 may communicate with a corresponding module or tag using a separate physical channel 138.

[0033] Numerous variations and enhancements of the above-described wireless power transmission system 100 are possible, and the following teachings are applicable to any of such variations and enhancements.

[0034] Figure 2 illustrates a simplified schematic of an inductive wireless power transfer system 100. Wireless power transfer system 100 includes a power receiver 120, an inductive link 130, and a wireless power transmitter 110 as described above. Inductive link 130 is not a separate device, but rather includes components that are part of wireless power receiver 120 (*e.g.*, power receiver winding LRx and tuning capacitor CRx) or part of wireless power transmitter 110 (*e.g.*, power transmitter winding LTx and tuning capacitor CTx). The respective power transmitter and receiver windings may be magnetically coupled, for example by being brought into physical proximity, allowing for power delivery and providing a communications channel between power transmitter 110 and power receiver 120. In some embodiments, power transfer may be unidirectional from transmitter to receiver, although it is also possible to allow for bidirectional power transfer, in which power may flow from "receiver" to "transmitter" if appropriate in a particular context. In either case, communications may be bidirectional between wireless power transmitter 110 and wireless power receiver 120.

[0035] In one embodiment, wireless power transmitter 110 may modulate one or more electrical characteristics of the delivered power (*e.g.*, frequency) to communicate encoded information to wireless power receiver 120 using frequency shift keying (FSK) or other communications techniques. These frequency (or other parameter) changes may be reflected across inductive link 130, and power receiver 120 may include circuitry to detect and decode these

frequency (or other electrical parameter) changes. Similarly, wireless power receiver 120 may modulate the load applied (and thus power drawn) from the inductive link to communicate encoded information to the power transmitter 110. In the illustrated simplified schematic, load modulation may be provided by circuitry represented by switched current source 226. By switching an additional load in parallel with the regular load of the receiver device on the DC side of rectifier 124, power drawn from the inductive power link may be increased or decreased. As a result, current amplitude changes may be reflected across inductive link 130 and can be detected and decoded by circuitry in wireless power transmitter 110 (*e.g.*, by demodulation block 133).

[0036] The physical construction of wireless power transmitter 110 and wireless power receiver 120, their configuration (*e.g.*, relative positioning, alignment, and separation), and the electrical operating conditions (*e.g.*, amount of power being transferred, electrical noise or interference, etc.) can all affect the bandwidth of the communications channel described above. In some cases, the frequency response from wireless power receiver 120 to wireless power transmitter 110 may cause symbols transmitted in time to spread to other symbols, thereby causing inter-symbol interference (ISI) and degrading the quality of communications. These limitations can result from a variety of physical limitations, but in general the communications channel may be thought of as a filter with a frequency response that may distort transmitted symbols. However, in some applications the power transmitter may derive and apply a filter that is an inverse of this channel frequency response to allow for higher communications bandwidth. However, in some applications the transmitter may derive and apply a filter that is an inverse of this slow frequency response to allow for higher communications bandwidth. This technique is a form of equalization.

[0037] The equalization may be achieved by causing or inviting the PRx device to send a predetermined characterizing signal that may be received and analyzed by the PTx device. The characterizing signal may be initially received by a signal front end 131 that can apply various conditioning and analysis to the received signal. The PTx may employ calculation techniques based on a model of the communications channel that can characterize the channel in terms of two parameters: τ (corresponding to a time constant of the channel) and ζ (corresponding to a damping factor of the channel). These parameters relate to the physical and electrical characteristics of a given channel. Once τ and ζ are determined, they may be used to determine the filter taps of a filter that the PTx device can apply to the received signal to overcome the bandwidth limitations

of the channel, allowing for higher data rate communications. These filter taps define a filter that may be applied to the communication channel by equalization block 132 of the PTx device. This technique will now be described in greater detail with respect to Figs. 3–5.

[0038] Figure 3 illustrates a high-level flow diagram depicting a first portion of the channel estimation technique introduced above. Beginning at block 201, the PRx device 120 can transmit a step response signal 201a. This step signal 201a can be used by the transmitter to characterize the channel. As an alternative to a step signal, other signals having known, agreed, and/or predetermined characteristics could be used in lieu of a step function, such as an impulse function (*i.e.*, $\delta(t)$), a predefined chirp signal, etc. This characterizing signal can be transmitted in response to a communication from the PTx device 110 inviting such a signal or otherwise indicating that it is ready to receive such a signal. In such cases, the PTx device or PRx device may initiate a high-speed communication initiation process that includes the channel estimation technique. Various messaging and communication techniques that may be used to establish a high-speed communication channel are described in greater detail below. In some cases, the PRx device may be configured to transmit the characterizing signal as part of its own startup and negotiation process.

[0039] In block 202, a signal *r(t)*/202a corresponding to the step response or other characterizing signal may be received by PTx device 110. As illustrated, depending on the nature of the channel, the system may be in one of two operating conditions. In operating condition 1, the system is "underdamped," and the received step response 202a has an overshoot. In operating condition 2, the system is "critically damped" or "overdamped," and the received step response 202a has no overshoot. In operating condition 1, *i.e.*, the underdamped case, the parameters τ and ζ may be computed (*e.g.*, by the PTx device) from the normalized function f_{nrm} using the illustrated equations, described in greater detail below with reference to Fig. 5. In operating condition 2—the critically damped or overdamped condition—τ may be computed using the same formula as in operating condition 1 and ζ may be assumed to be 1, which corresponds to critical damping, but is sufficiently accurate even in an overdamped case. As described with reference to the description of Fig. 5, below, the approximated formulas for τ and ζ are sufficiently computationally tractable that they may be implemented using one or more processing elements, such as digital signal processor or microcontroller integrated circuits, that can be part of PTx controller/comms circuitry 116, thus rendering them particularly suitable for various consumer electronics applications. In

some applications the one or more processing elements could also or alternatively include FPGAs, ASICs, or other types of processors or suitably configured circuitry.

[0040] Turning now to Fig. 4, the equalization technique continues with block 304, in which the PTx device can take the estimated τ and ζ parameters and compute the equalizer taps, *i.e.*, the taps of a discrete time filter $g(n)$. More specifically, in operating condition 1—the underdamped case—the frequency domain representation $G(\omega)$ of the equalizer may be computed from τ and ζ using the formula given in Fig. 4 and discussed in greater detail below with reference to Fig. 5. The time domain filter taps $g(n)$ may then be determined by applying an inverse discrete Fourier transform (or other suitable transform) to this frequency domain representation. Alternatively, a suitable infinite impulse response (IIR) filter may be computed and applied. In operating condition 2—the critically damped or overdamped condition—ζ may be assigned a value of 1, and the time domain filter taps $g(n)$ may be computed using the formula given in Fig. 4 and discussed below with reference to Fig. 5. In either case, the resulting equalization filter $g(n)$ may be applied to subsequent signals received by the PTx device from the PRx device to compensate for the filtering effects of the communications channel.

[0041] Block 306 illustrates an exemplary equalizer tap sequence 306 for an operating condition 1 (underdamped) configuration. As can be seen, there is a large positive tap value, followed by a smaller, but still relatively large negative tap, followed by a few non-zero, relatively smaller tap values. Block 307 illustrates an exemplary equalizer tap sequence 307 for an operation condition 2 (critically damped or overdamped) configuration. As can be seen, there is a large positive tap value, followed by a smaller, but still relatively large negative tap, followed by zero tap values. These respective filter tap configurations can be found in all underdamped or critically/over-damped systems—with differing numeric values depending on the exact physical characteristics and configurations as well as electrical operating conditions.

[0042] Figure 5 illustrates an expanded block diagram/flowchart depicting in greater detail the technique described above with respect to Figs. 3 and 4. Beginning at block 401, PRx 120 and PTx 110 can agree to negotiate a high-speed communications link. Prior to this point, all communications between PRx 120 and PTx 110 may be conducted in accordance with a predefined protocol, which may be an industry standard protocol, such as the Qi protocol promulgated by the Wireless Power Consortium (WPC). In block 411, after the PRx and PTx agree to negotiate a

high-speed communications exchange, PTx 110 may send to PRx 120 a request for PRx 120 to transmit a step response (or other signal that will be used to characterize the communications channel). In some embodiments, this request may be sent using a frequency shift keying (FSK) technique, in which PTx 110 modulates the frequency of the transmitted power in a way that can be detected and decoded by suitable circuitry in PRx 120. Other modulation schemes could also be used as appropriate in a given application. In block 421, PRx 120 may receive and decode the request. In response thereto, in block 422 PRx 120 may quiet the channel for a predetermined time period corresponding to a number of switching cycles of the converter driving the transmit coil, *i.e.*, the switching frequency of the system. In some embodiments, this switching frequency may be in the hundreds of kilohertz, *e.g.*, 100–120 kHz, 128 kHz, 326 kHz, or 360 kHz. In some embodiments, this switching frequency may be in the megahertz range, *e.g.*, 1–2 MHz. In other embodiments, any suitable switching frequency may be used, such as in the gigahertz range. The number of cycles for which the channel is quieted may be M, where M is greater than a value N_1. The number of cycles M may be on the order of tens of cycles (*e.g.*, 20 cycles), which can correspond to a time period of tens of microseconds (or greater).

[0043] During the interval corresponding to N_1 (greater than M), as indicated in block 412, PTx 110 may sample the channel deriving a signal f(n), which can be represented by an I-Q decomposition as:

$$f(n) = \sqrt{I^2(n) + Q^2(n)}$$

The PTx may be further configured (block 413) to compute a value f(0) according to:

$$f(0) = \frac{1}{N_1}\sum_{n=1}^{N_1} f(n)$$

where N_1 is the total number of samples on the PTx side at the beginning of the quieted period, and the function values are the respective samples. The value f(0) can correspond to an average initial condition and can be used for normalization as described in greater detail below.

[0044] After the expiration of the M cycles, in block 423, PRx 120 may transmit the step response (or other characterizing signal). Concurrently (block 414), PTx 110 may sample f(n), i.e., the received step response (or other characterizing signal) for a number of cycles N_2 that is much larger than N_1. For example, N_2 may be on the order of hundreds of cycles (e.g., 200 cycles)

corresponding to a time period of hundreds of microseconds (or greater). In the illustrated example N_2 is an order of magnitude greater than N_1, although other values may be used, provided that N_2 is sufficiently larger than N_1. Then (block 415), PTx 110 may compute $f(\infty)$ according to the formula where N_1 is the total number of samples on the PTx side at the end of the quieted period:

$$f(\infty) = \frac{1}{N_1}\sum_{n=1}^{N_1} f(n)$$

[0045] Then, moving on to block 416, PTx 110 may compute a normalized response $f_{nrm}(n)$ using each measured response value f(n) and the computed f(0) and $f(\infty)$ according to the formula:

$$f_{nrm}(n) = \frac{f(n) - f(\infty)}{f(0) - f(\infty)}$$

Once the normalized function is computed, the PTx may compute τ (block 417) according to the formula:

$$\tau \approx \sum_{n=1}^{N_2} f_{nrm}(n) \times \Delta T$$

where ΔT is the sampling time. Additionally, the PTx may compute the overshoot value OS (block 418) according to the formula:

$$OS = -\max(\min(f_{nrm}(n), -0.5))$$

The overshoot value can be the negative value of the greater of 0.5 and the minimum value of f_{nrm}. As a result, the overshoot value will end up being between 0 and 0.5.

[0046] Moving on to block 419, the PTx can determine whether the overshoot value is greater than 1%. If not, then the system may be considered as critically damped (operating condition 2) and the PTx may compute the filter taps *g(n)* (block 420) using the formula for the frequency domain representation of the equalizer $G(\omega)$:

$$G(\omega) = e^{j\omega} - 2(e^{-2\frac{T}{\tau}}) + (e^{-2\frac{T}{\tau}})^2\, e^{-j\omega}$$

$G(\omega)$ may be inverse transformed to generate g(n) as described above with reference to Fig. 4.

Alternatively, if the overshoot is greater than 1%, the system may be considered as underdamped (operating condition 2) meaning that ζ is less than 1 and can be computed from the overshoot (block 421) in accordance with the formula:

$$\zeta = \frac{-\ln OS}{\sqrt{\pi^2 + (\ln OS)^2}}$$

Then, in block 422, the frequency domain representation of the equalizer G(ω) may be computed by:

$G(\omega) = e^{j\omega} - 2\text{acos}(w_0) + a^2\, e^{-j\omega}$where:

$$a = e^{-2\zeta^2\frac{T}{\tau}}, \omega_0 = 2\zeta\sqrt{1-\zeta^2}\frac{T}{\tau}$$

G(ω) may be inverse transformed to generate g(n) as described above with reference to Fig. 4.

[0047] Turning now to Fig. 6, a communication process 500 that may be used to initiate communication between a wireless power transmitter (PTx) and a wireless power receiver (PRx) is illustrated. The process may commence at a slow data rate (*e.g.*, 2kbps). Initially, in block 1, the PRx may send a plurality of messages 501 that are a digital ping/identification/communication. Responsive thereto, in block 2, the PRx may send a request for identification message 502a to the PTx. These and other messages from the PRx may be sent by amplitude shift keying (ASK) of the received power signal as described above with reference to Figs. 1–2. In response, the PTx may send an identification message 502b. These and other messages from the PTx may be sent by frequency shift keying (FSK) of the received power signal as described above with reference to Figs. 1–2. Also, for these and all other messages described herein, even if illustrated as single messages, the respective messages may comprise multiple packets, depending on the exact protocol and implementation.

[0048] In block 3, the PRx may send a request for the capabilities (*e.g.*, power transfer capabilities, such as maximum power transfer rate, power transfer frequency, etc.) of the PTx device (message 503a). In response, the PTx may send a message 503b indicating such capabilities. In block 4, the PRx may send a request (message 503a) for the communication capabilities of the PTx device (*e.g.*, capability to engage in in-band communications at various frequencies, data rates, etc.). In response, the PTx may send a message 503b indicating its communication capabilities.

In some applications the two sets of capabilities messages may be combined into a single set. Following the estimation phase, in block 4, the PRx can send a message 514a applying a new configuration, *e.g.*, the higher data rate. The PTx can reply with an acknowledgement message 514b. Finally, in block 5, the PRx can send a message 505a indicating the end of the negotiation phase, which can be acknowledged by a message 505b from the PTx device.

[0049] Following this exchange, the PRx and PTx may engage in power transfer and subsequently enter a high-speed communication mode as illustrated in Fig. 7. Beginning in block 1, while power transfer can be in process, the PRx can send message 511a requesting entry into a training phase in which the communication channel may be characterized as described above with reference to Figs. 3–5. The PTx may acknowledge this request via ACK message 511b. Then, in block 2, the training phase can commence with the PRx sending training parameters, such as the indication for channel equalization and a desired high speed data rate (*e.g.*, 20kbps), which can be accepted/approved by the PTx. The PTx can send ACK message 512b, acknowledging these parameters. Then block 3 can include the channel estimation phase 513, which can be conducted as described above with respect to Figs. 3–5 and described in further detail below with reference to Figs. 8–9. This phase can also include the transition from the lower data rate (*e.g.*, 2kbps) to a higher data rate (*e.g.*, 20kbps). Following the estimation phase, in block 4, the PRx can send a message 514a applying a new configuration, *e.g.*, the higher data rate. The PTx can reply with an acknowledgement message 514b. Then, power transfer can resume/continue, with a higher communication rate, as evidenced by messages 515 in block 5.

[0050] Figure 8 illustrates the channel estimation phase 513 in greater detail. In general, channel estimation proceeds as described above with reference to Figs. 3–5. As described above with respect to Fig. 8, the training phase may be initiated by the PRx sending a start training message 512a to the PTx, which may be acknowledged by the PTx with ACK message 512b. This can mark the transition to the high-speed (*e.g.*, 20kpbs) communications regime and can include one or more channel estimation steps 513a, 513b during the direct equalization training period. As illustrated, each of these channel estimation blocks can include the PRx device quieting/silencing the channel, transmitting a step (or other characterizing signal), and a delay to allow the PTx to perform its processing. More specifically, PTx can, substantially contemporaneously with the above-described actions of PRx, search for the step signal (or other characterizing signal) and, upon receiving such signal, process the received signal to derive the channel estimation parameters

as described in more detail above with respect to Figs. 3–5. From these channel estimation parameters, a suitable filter for channel equalization can be computed (513c) as described above. Then, via messaging 514a and 514b, the new channel configuration may be applied, and power transfer can resume (515).

[0051] Figure 9 illustrates a simplified timing diagram of the channel estimation attempts 513a, 513b. The channel estimation process may include one or more of these attempts. This process generally aligns with that described above, and exemplary timing intervals are provided, although other time periods may be appropriate depending on communications frequency, switching frequency of the power converters, etc. Beginning in block 601, the PRx can silence/quiet the comms channel for a certain time period, *e.g.*, 15ms. Then, in block 602, the PRx can transmit the step signal (or other characterizing signal). This may again take a time period of 15 ms (for example). Following this, in block 603, there may be a delay period, *e.g.*, 15ms again, before either another channel estimation attempt or the completion of the channel estimation phase.

[0052] Substantially contemporaneously with the above-described operations, the PTx may operate in a capture mode for a period, *e.g.*, 40ms, sufficient to capture the step or other characterizing function (block 605) with a buffer on either side (blocks 604) to account for slight timing differences between the PTx and PRx devices. Subsequently, in block 605, the PTx can perform the required processing to characterize the channel and compute the filter taps, which may be a relatively short time period, *e.g.*, 5ms. As noted above, all of these time periods are merely exemplary, and other suitable time periods may be employed as appropriate.

[0053] Figure 10 illustrates a modified channel estimation and equalization process in which samples below a first threshold or above a second threshold are discarded to improve accuracy of the calculated coefficients. More specifically, Figure 10 illustrates a plot 700 of samples corresponding to a received characterizing signal (curve 741), a first curve 743 employing all such samples for calculating the channel estimation parameters, *e.g.*, τ (a time constant parameter) and ζ (a damping parameter) as described above, and a second curve 746 in which certain samples are discarded to improve the accuracy of the calculated channel estimation parameters. In some cases, the physical and electrical properties of the channel may be such that the received characterization signal 741 exhibits an undershoot 742. In such cases, use of all received samples in accordance with the techniques described above may result in calculation of channel estimation parameters

corresponding to a first curve 743, which may not match the actual characterizing signal as closely as desired. For example, as illustrated, curve 743 begins rising sooner, stops rising later, and in general has a lesser slope/larger radius of curvature than the received characterizing samples corresponding to curve 741.

[0054] To overcome this potential inaccuracy, certain samples may be excluded from the calculation of the channel estimation parameters. For example, in the case of a step function characterizing signal, samples having a value less than a first threshold TH1% (744) and samples having a value greater than a threshold TH2% (745) may be discarded or otherwise excluded from the channel estimation parameter computation. First threshold TH1% may be a relatively small fraction or percentage of the full-scale value of the step function, such as 10%, although other values such as 1%, 2%, 5%, 15%, 20%, etc. could also be used. Second threshold TH2% may be a relatively large fraction or percentage of the full-scale value of the step function, such as 90%, although other values such as 99%, 98%, 95%, 85%, 80%, etc. could also be used. Discarding such samples can also be described as using only samples having amplitude values corresponding to a central window (*e.g.*, between TH1% and TH2%) of the characterizing signal. So doing can result in channel estimation parameters that correspond to a calculated curve 746 that more closely tracks the received samples 741.

[0055] In at least some applications, there may be various advantages to channel estimation using only a selected subset of characterizing signal samples as described above. First, as noted, the accuracy of the calculated channel estimation parameters may be improved, such as in cases having an undershoot (as illustrated) or other characterizing signal anomaly, particularly near the extremes of the characterizing signal values. An additional advantage of such a technique could be the reduced precision with which the timing of the characterizing signal need be determined. Additionally, memory usage and/or computation time may be reduced because of the use of a smaller number of samples. Finally, the sample subset technique described with respect to Fig. 10 is compatible with all of the channel estimation techniques described herein and can be adapted to work with a variety of characterizing signal types.

[0056] In the channel estimation and equalization techniques described above, the channel estimation is based on receipt of a predetermined characterizing signal transmitted by one device (*e.g.*, a wireless power receiver). However, in some applications known characteristics of the data

stream can be used as such a predetermined characterizing signal. Figure 11 illustrates a modified channel estimation and equalization process in which known characteristics of a data stream are used as a characterizing signal. More specifically, Fig. 11 illustrates a data stream 800 that includes two data packets 851 and 852. In the upper portion of Fig. 11, data packets 851 and 852 are represented as digital bits (*i.e.*, 1s and 0s), and in the lower portion of Fig. 11, data packets 851 and 852 are represented as a simple amplitude shift keyed waveform. As depicted in Fig. 11, digital 1s correspond to the high amplitude, while digital 0s correspond to the lower amplitude; however, other encoding techniques could also be used. As but one example, Manchester encoding, in which transitions of the waveform are used to represent digital values, could also be used. In any case, the amplitudes used for encoding can be any suitable voltage, current, etc. As in the examples described above, in some embodiments, the amplitude of the load current may be modulated by a wireless power receiver to provide the desired ASK waveform.

[0057] Turning back to the data stream 800 and constituent packets 851, 852, the specification of the communication protocol used by data stream 800 can be advantageously used as a characterizing signal for channel estimation according to the techniques described above. For example, the communication protocol may specify that each packet 851, 852 is to be followed by a quiet period 853, 854. The communication protocol may also specify that each packet is to begin with a start sequence, followed by a payload, followed by one or more stop bits. Other packet components and definitions are possible, such as parity bits or other redundant data for error detection and recovery, etc. For purposes of the discussion herein, the packet and protocol definition examples are relatively simple for ease of understanding, but in a real implementation may be any desired packet structure, such as a packet structure defined by the Qi wireless power transfer standards promulgated by the Wireless Power Consortium.

[0058] In the illustrated example, each packet 851, 852 begins with a start sequence 851a, 851b, which is depicted in Fig. 11 as being three 1 bits but could be any desired value. Within each packet 851, 852, the start bits can be followed by an 8-bit payload 851b, 852b, which may differ from one packet to the next. Following each payload is a stop bit 851c, which is always a 1, although other end of packet markers or patterns could be used. The combination of the predetermined stop bit in each packet and the following quiet period can be used as the characterizing signal for the channel estimation techniques described above. In other words, the step down from the high amplitude of the 1 bit to the quiet period following each packet can be

used as a step characterizing signal as described above. However, this specific characteristic is not the only one that can be used as the characterizing signal, rather any known property of the data stream can be used as a characterizing signal, although it may be preferable to use certain known properties rather than others as they may give a better characterization of the channel.

[0059] In at least some applications, there may be various advantages to channel estimation using known characteristics of the data stream as described above. First, use of known characteristics can eliminate the need for a separate, predetermined exchange to facilitate transmission and reception of the characterizing signal. This can also reduce the time required to perform the channel estimation. Moreover, the channel characterizing signal is always available, and can be used at any time to update the channel estimation and the equalization parameters derived therefrom if conditions should change. Described above are various features and embodiments relating to enhanced communications in wireless power transfer systems. Such arrangements may be used in a variety of applications but may be particularly advantageous when used in conjunction with portable electronic devices employing wireless charging and the corresponding wireless charging devices. Additionally, although numerous specific features and various embodiments have been described, it is to be understood that, unless otherwise noted as being mutually exclusive, the various features and embodiments may be combined various permutations in a particular implementation. Thus, the various embodiments described above are provided by way of illustration only and should not be constructed to limit the scope of the disclosure. Various modifications and changes can be made to the principles and embodiments herein without departing from the scope of the disclosure and without departing from the scope of the claims.

[0060] The foregoing describes exemplary embodiments of wireless power transfer systems that are able to transmit certain information amongst the PTx and PRx in the system. The present disclosure contemplates this passage of information improves the devices' ability to provide wireless power signals to each other in an efficient manner to facilitate battery charging, such as by sharing of the devices' power handling capabilities with one another. Entities implementing the present technology should take care to ensure that, to the extent any sensitive information is used in particular implementations, that well-established privacy policies and/or privacy practices are complied with. In particular, such entities would be expected to implement and consistently apply privacy practices that are generally recognized as meeting or exceeding industry or

governmental requirements for maintaining the privacy of users. Implementers should inform users where personally identifiable information is expected to be transmitted in a wireless power transfer system and allow users to "opt in" or "opt out" of participation. For instance, such information may be presented to the user when they place a device onto a power transmitter, if the power transmitter is configured to poll for sensitive information from the power receiver.

[0061] Risk can be minimized by limiting the collection of data and deleting data once it is no longer needed. In addition, and when applicable, data de-identification can be used to protect a user's privacy. For example, a device identifier may be partially masked to convey the power characteristics of the device without uniquely identifying the device. De-identification may be facilitated, when appropriate, by removing identifiers, controlling the amount or specificity of data stored (e.g., collecting location data at city level rather than at an address level), controlling how data is stored (e.g., aggregating data across users), and/or other methods such as differential privacy. Robust encryption may also be utilized to reduce the likelihood that communication between inductively coupled devices are spoofed.

CLAIMS

1. A method performed by one or more processing elements of a wireless power transmitter, the method comprising:

receiving results of a characterizing signal transmitted by the wireless power receiver;

computing at least two parameters of a model characterizing an in-band communications channel based on a subset of the received results of the characterizing signal transmitted by the wireless power receiver, wherein a first parameter corresponds to a time constant of the communications channel, and a second parameter corresponds to a damping value of the communications channel;

computing an equalizing filter from the at least two parameters; and

applying the computed equalizing filter to subsequent signals received by the wireless power transmitter via the in-band communications channel.

2. The method of claim 1 wherein the subset of the received results corresponds to samples having values within a predetermined window of the characterizing signal.

3. The method of claim 2 wherein the predetermined window is defined by first and second thresholds.

4. The method of claim 3 wherein the first threshold is 10% and the second threshold is 90%.

5. The method of claim 1 wherein the characterizing signal is a step signal.

6. The method of claim 1 wherein the characterizing signal is a known characteristic of a communication protocol used by the in-band communications channel.

7. The method of claim 6 wherein the known characteristic includes a stop bit at the end of a data packet.

8. The method of claim 1 further comprising transmitting to the wireless power receiver a request to transmit the characterizing signal through the in-band communications channel, wherein the characterizing signal transmitted by the wireless power receiver is sent in response to the transmitted request.

9. A wireless power transmitter comprising:

an inverter that receives a DC input voltage and produces an AC output voltage;

a wireless power transmitter coil that receives the AC output voltage from the inverter and delivers power to a wireless power receiver by magnetic coupling;

controller and communications circuitry that controls the inverter and provides in-band communications with the wireless power receiver via the wireless power transmitter coil, wherein the controller and communications circuitry that:

receives results of a characterizing signal transmitted by the wireless power receiver;

computes at least two parameters of a model characterizing an in-band communications channel based on a subset of the received results of the characterizing signal transmitted by the wireless power receiver, wherein a first parameter corresponds to a time constant of the communications channel, and a second parameter corresponds to a damping value of the communications channel;

computes an equalizing filter from the at least two parameters; and

applies the computed equalizing filter to subsequent signals received by the wireless power transmitter via the in-band communications channel.

10. The wireless power transmitter of claim 9 wherein the subset of the received results corresponds to samples having values within a predetermined window of the characterizing signal.

11. The wireless power transmitter of claim 10 wherein the predetermined window is defined by first and second thresholds.

12. The wireless power transmitter of claim 11 wherein the first threshold is 10% and the second threshold is 90%.

13. The wireless power transmitter of claim 9 wherein the characterizing signal is a step signal.

14. The wireless power transmitter of claim 9 wherein the characterizing signal is a known characteristic of a communication protocol used by the in-band communications channel.

15. The wireless power transmitter of claim 14 wherein the known characteristic includes a stop bit at the end of a data packet.

16. A method performed by one or more processing elements of a wireless power transmitter, the method comprising:

receiving results of a characterizing signal transmitted by a wireless power receiver, wherein the characterizing signal is a known characteristic of a communication protocol used by an in-band communications channel;

computing at least two parameters of a model characterizing the in-band communications channel based on the received results of the characterizing signal transmitted by the wireless power receiver, wherein a first parameter corresponds to a time constant of the communications channel, and a second parameter corresponds to a damping value of the communications channel;

computing an equalizing filter from the at least two parameters; and

applying the computed equalizing filter to subsequent signals received by the wireless power transmitter via the in-band communications channel.

17. The method of claim 16 wherein the known characteristic includes a stop bit at the end of a data packet.

18. A wireless power transmitter comprising:

an inverter that receives a DC input voltage and produces an AC output voltage;

a wireless power transmitter coil that receives the AC output voltage from the inverter and delivers power to a wireless power receiver by magnetic coupling;

controller and communications circuitry that controls the inverter and provides in-band communications with the wireless power receiver via the wireless power transmitter coil, wherein the controller and communications circuitry that:

receives results of a characterizing signal transmitted by the wireless power receiver, wherein the characterizing signal is a known characteristic of a communication protocol used by an in-band communications channel;

computes at least two parameters of a model characterizing the in-band communications channel based on the received results of the

characterizing signal transmitted by the wireless power receiver, wherein a first parameter corresponds to a time constant of the communications channel, and a second parameter corresponds to a damping value of the communications channel;

computes an equalizing filter from the at least two parameters; and

applies the computed equalizing filter to subsequent signals received by the wireless power transmitter via the in-band communications channel.

19. The wireless power transmitter of claim 18 wherein the known characteristic includes a stop bit at the end of a data packet.

Title: Enhanced Communications for Wireless Power Transfer
Inventors: Sriram Narayanan; Xing Zhou; Alireza Safaee; Zaid AbuKhalaf
Attorney Docket Number: P55148USX1 (APPL:1182CIP)

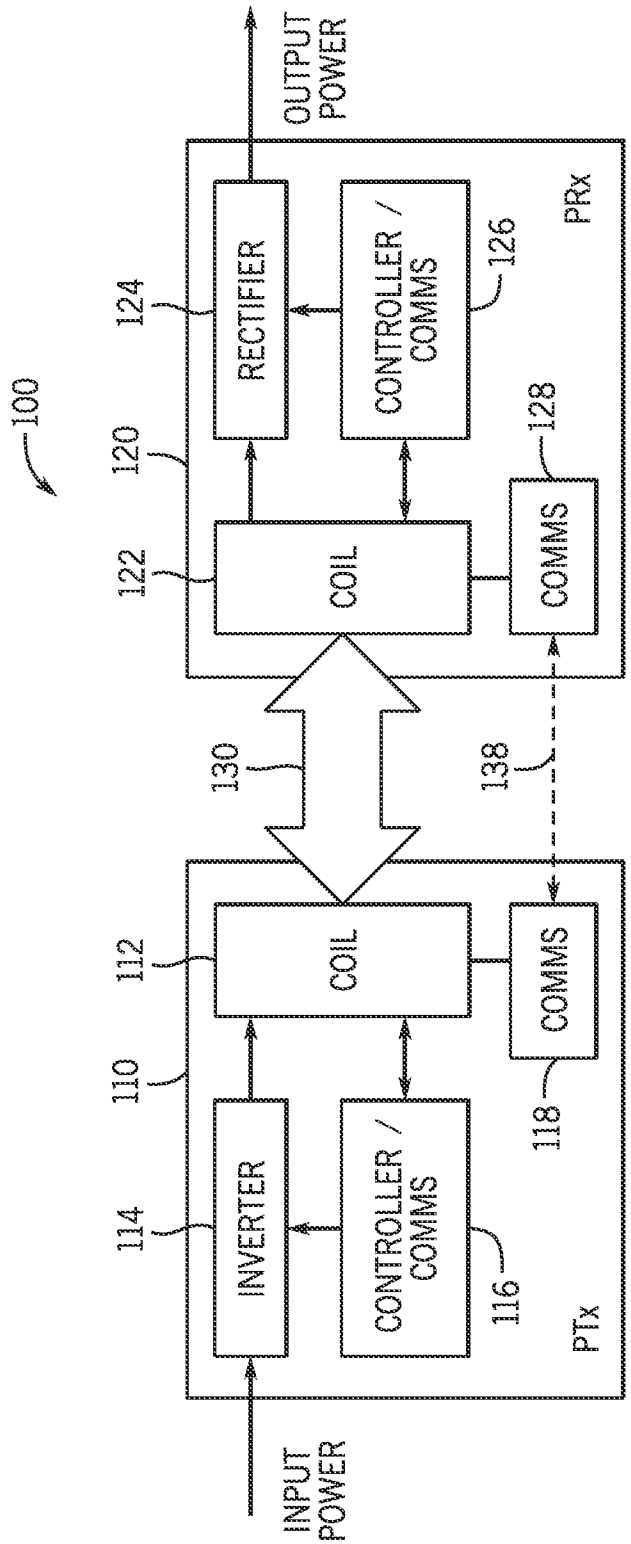

FIG. 1

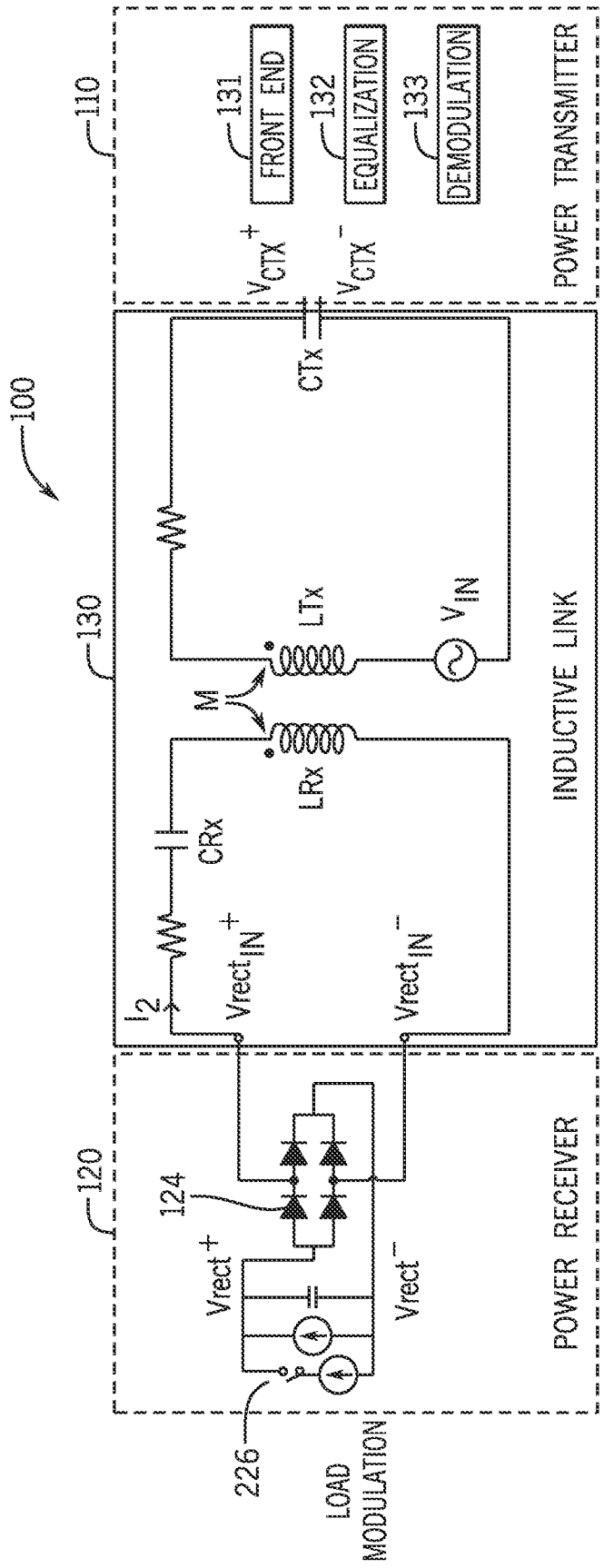
100
110
POWER TRANSMITTER
131
FRONT END
132
EQUALIZATION
133
DEMODULATION
V_{CTX}^+
V_{CTX}^-
CTx
130
INDUCTIVE LINK
LTx
V_{IN}
M
LRx
CRx
I_2
$Vrect_{IN}^+$
$Vrect_{IN}^-$
120
POWER RECEIVER
124
$Vrect^+$
$Vrect^-$
226
LOAD MODULATION

FIG. 2

Title: Enhanced Communications for Wireless Power Transfer
Inventors: Sriram Narayanan; Xing Zhou; Alireza Safaee; Zaid AbuKhalaf
Attorney Docket Number: P55148USX1 (APPL:1182CIP)

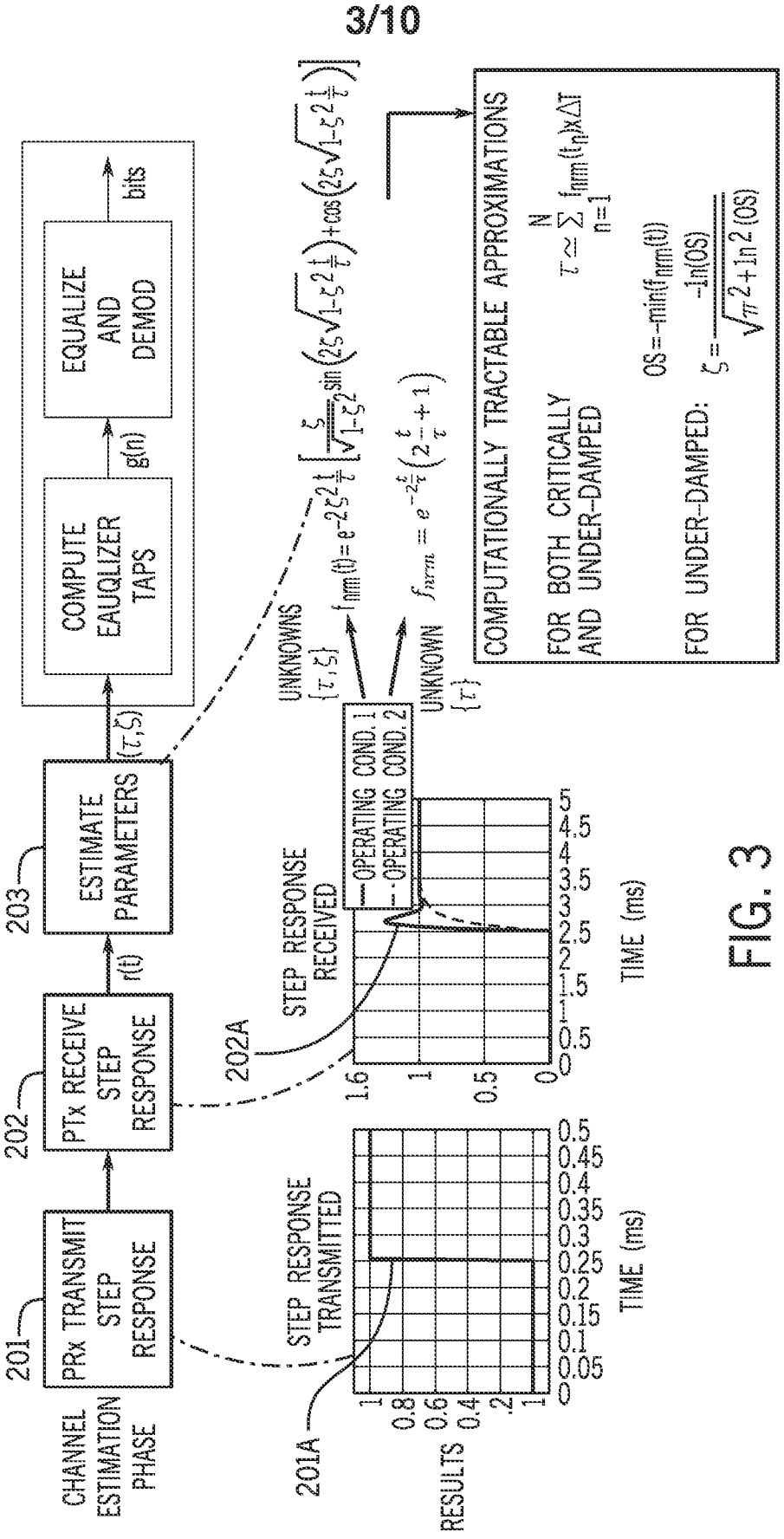

FIG. 3

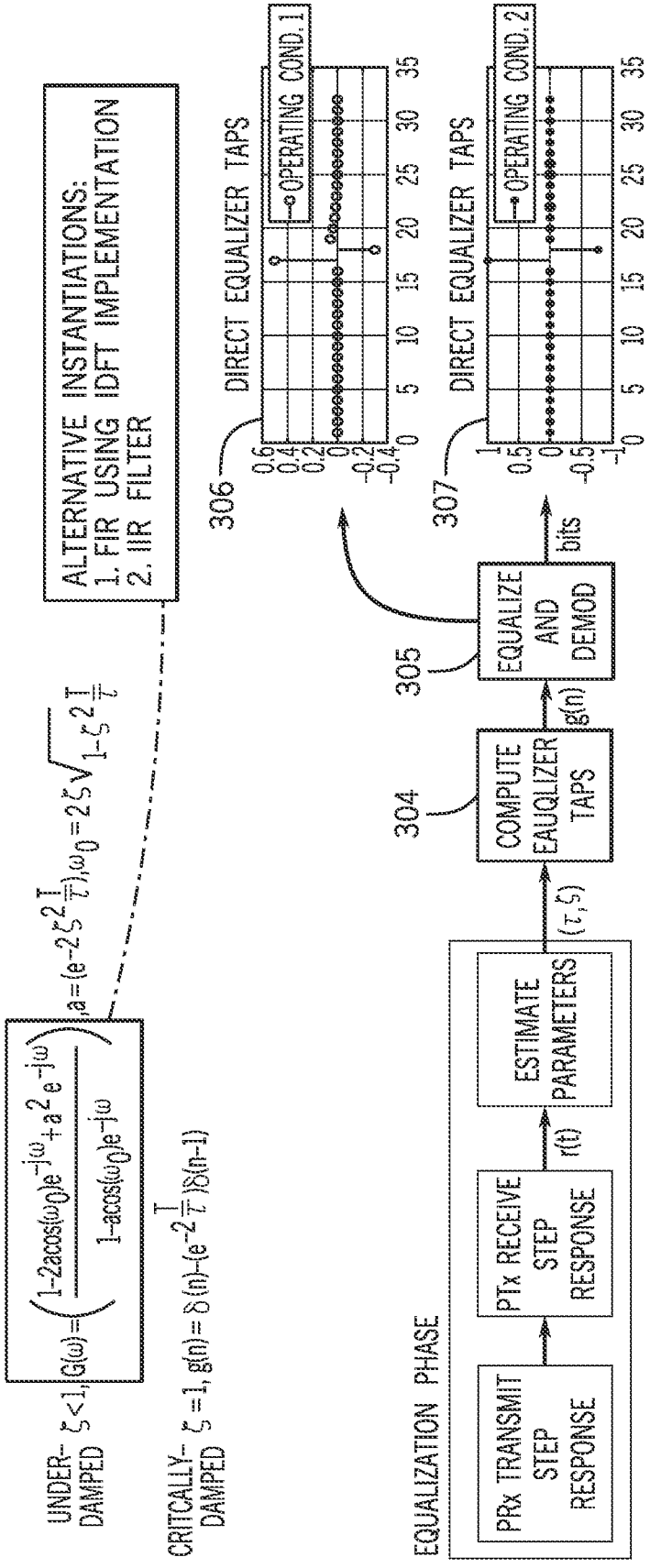
EQUALIZATION PHASE
PRx TRANSMIT STEP RESPONSE
PTx RECEIVE STEP RESPONSE
r(t)
ESTIMATE PARAMETERS
(τ, ζ)
304
COMPUTE EAUQLIZER TAPS
g(n)
305
EQUALIZE AND DEMOD
bits
306
DIRECT EQUALIZER TAPS
OPERATING COND. 1
307
DIRECT EQUALIZER TAPS
OPERATING COND. 2
ALTERNATIVE INSTANTIATIONS:
1. FIR USING IDFT IMPLEMENTATION
2. IIR FILTER
UNDER-DAMPED
CRITICALLY-DAMPED

FIG. 4

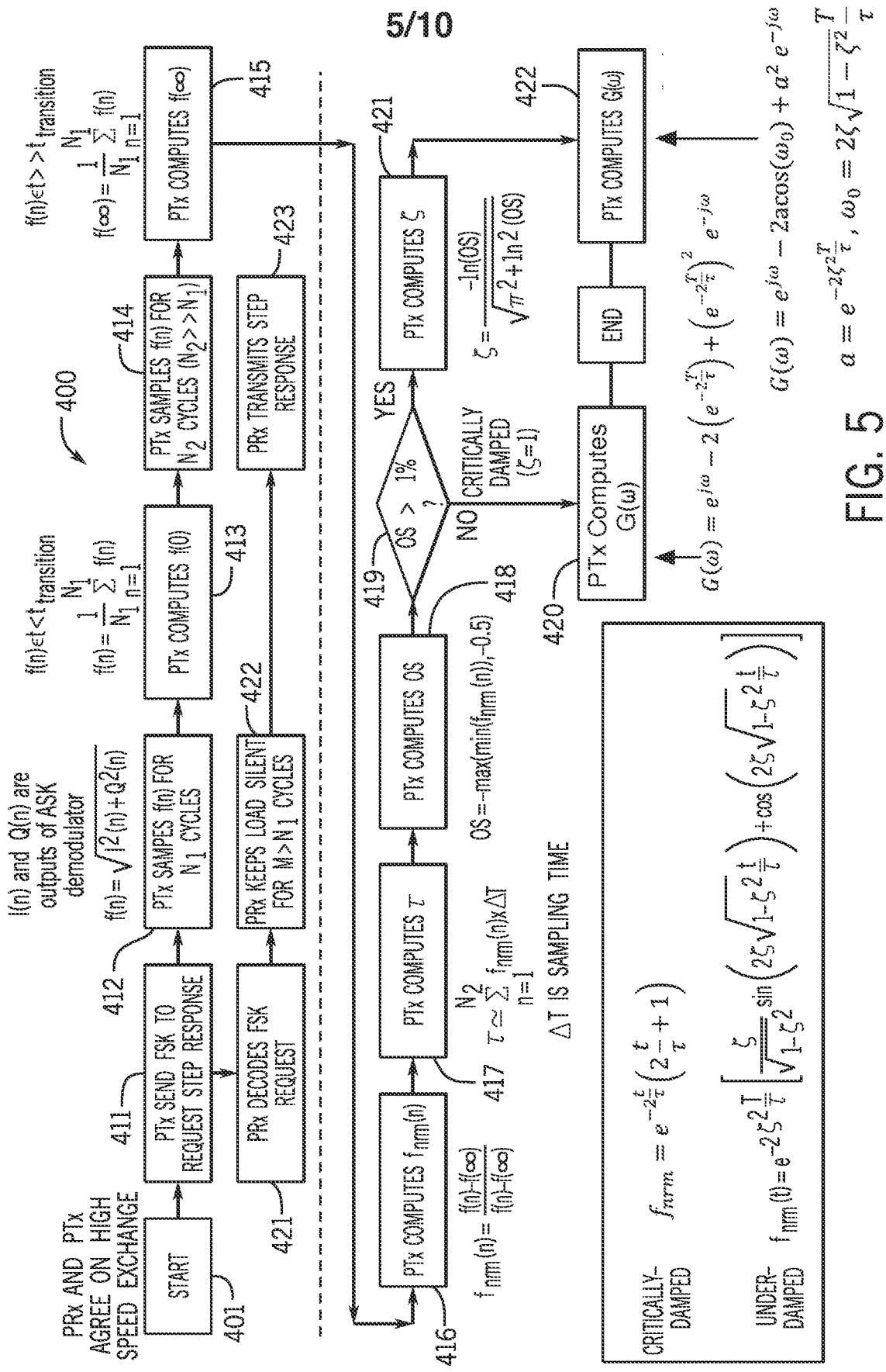
PRx AND PTx AGREE ON HIGH SPEED EXCHANGE
START
401
PTx SEND FSK TO REQUEST STEP RESPONSE
411
PRx DECODES FSK REQUEST
421
I(n) and Q(n) are outputs of ASK demodulator
412
PTx SAMPES f(n) FOR N1 CYCLES
PRx KEEPS LOAD SILENT FOR M>N1 CYCLES
422
400
f(n)<t<t transition
PTx COMPUTES f(0)
413
PRx TRANSMITS STEP RESPONSE
423
f(n)<t>>t transition
PTx SAMPLES f(n) FOR N2 CYCLES (N2>>N1)
414
PTx COMPUTES f(∞)
415
PTx COMPUTES fnrm(n)
416
PTx COMPUTES τ
417
PTx COMPUTES OS
418
OS > 1% ?
419
YES
NO
CRITICALLY DAMPED (ζ=1)
PTx COMPUTES ζ
421
PTx Computes G(ω)
420
END
422
PTx COMPUTES G(ω)
CRITICALLY-DAMPED
UNDER-DAMPED
ΔT IS SAMPLING TIME

FIG. 5

Title: Enhanced Communications for Wireless Power Transfer
Inventors: Sriram Narayanan; Xing Zhou; Alireza Safaee; Zaid AbuKhalaf
Attorney Docket Number: P55148USX1 (APPL:1182CIP)

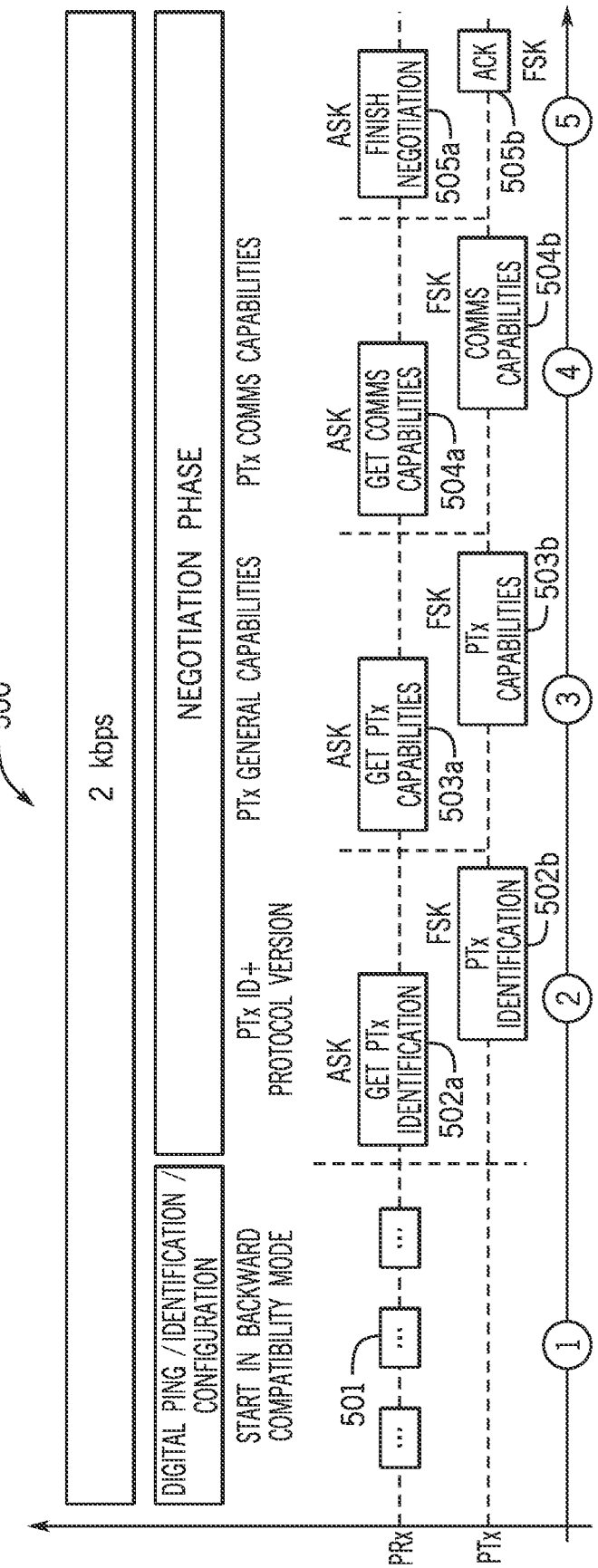

FIG. 6

Title: Enhanced Communications for Wireless Power Transfer
Inventors: Sriram Narayanan; Xing Zhou; Alireza Safaee; Zaid AbuKhalaf
Attorney Docket Number: P55148USX1 (APPL:1182CIP)

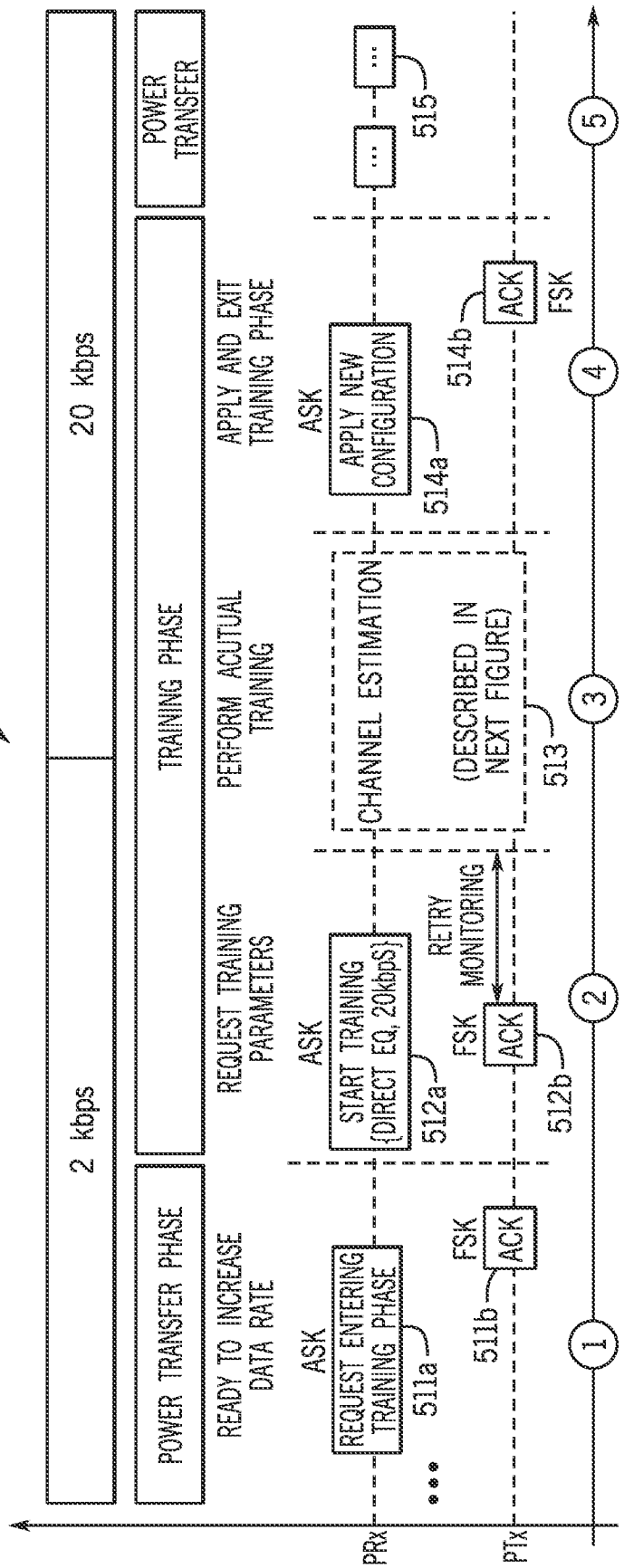

FIG. 7

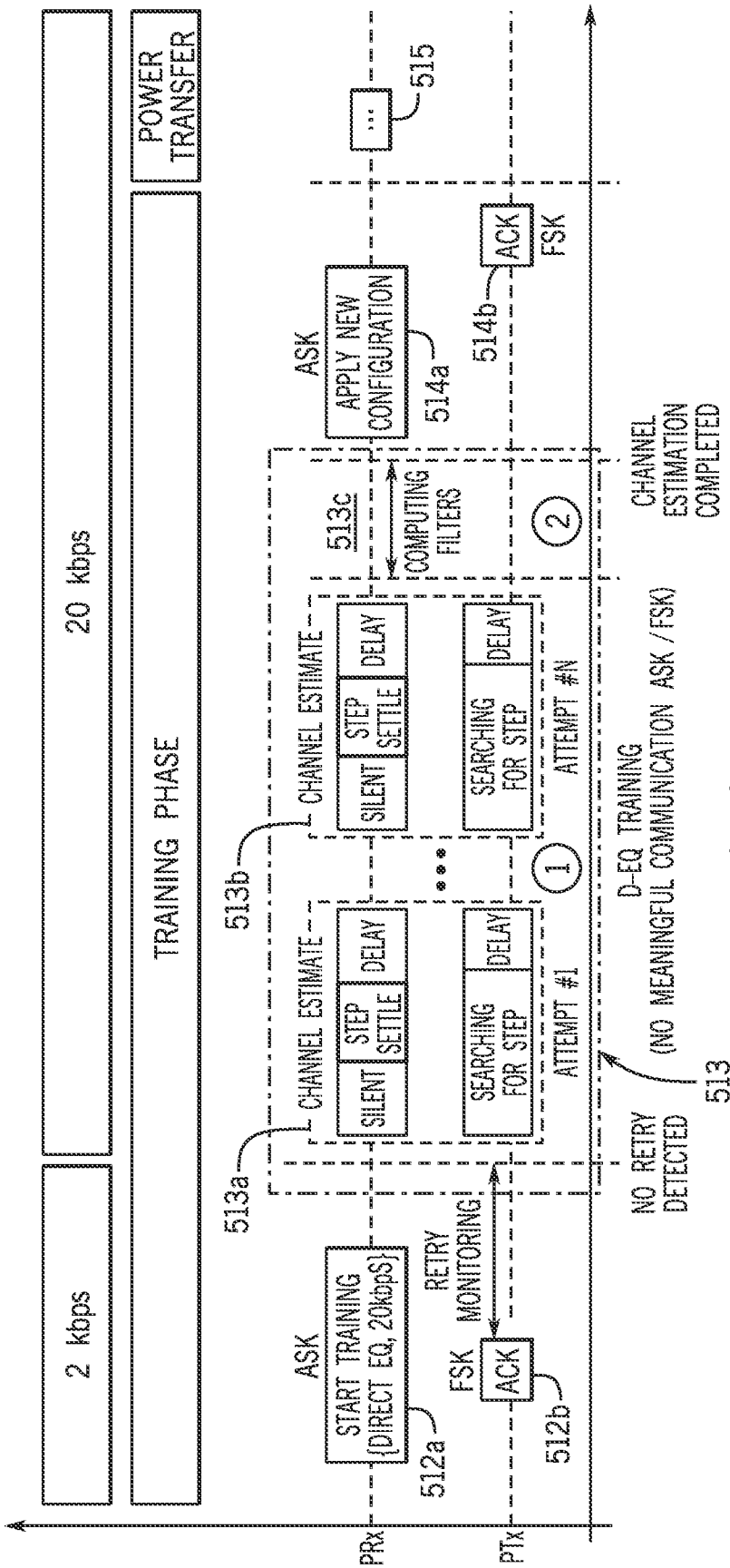
2 kbps
20 kbps
TRAINING PHASE
POWER TRANSFER
PRx
PTx
ASK
START TRAINING (DIRECT EQ, 20kbpS)
512a
FSK
ACK
512b
RETRY MONITORING
513a
CHANNEL ESTIMATE
SILENT
STEP SETTLE
DELAY
513b
SEARCHING FOR STEP
ATTEMPT #1
ATTEMPT #N
1
2
513c
COMPUTING FILTERS
ASK
APPLY NEW CONFIGURATION
514a
514b
ACK
FSK
515
D-EQ TRAINING
(NO MEANINGFUL COMMUNICATION ASK / FSK)
513
NO RETRY DETECTED
CHANNEL ESTIMATION COMPLETED

FIG. 8

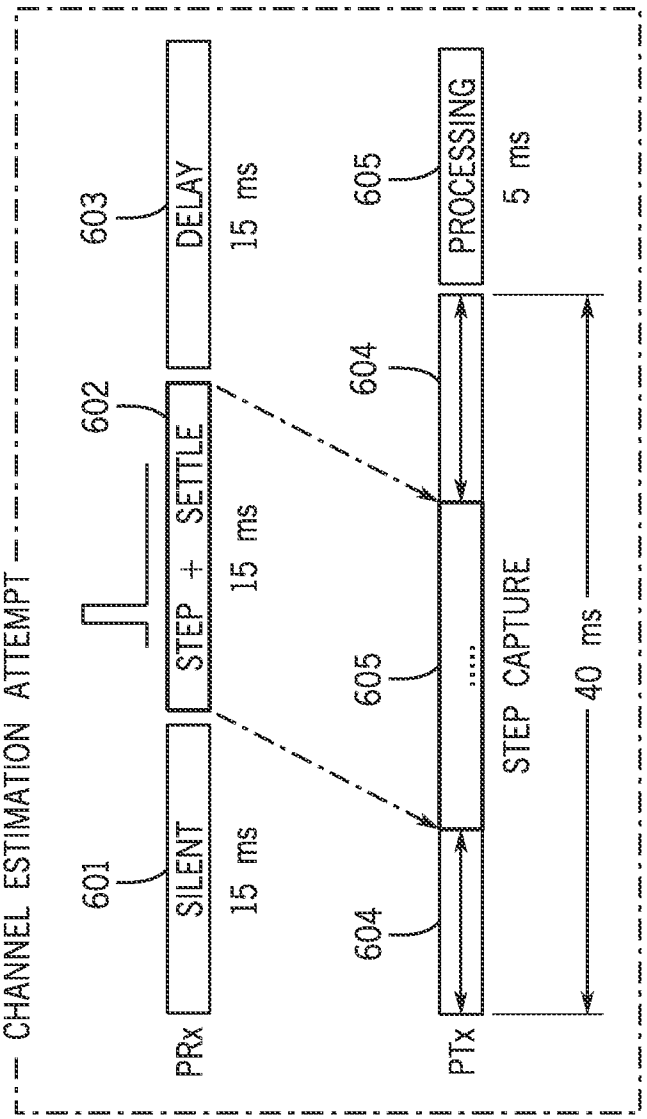
600
CHANNEL ESTIMATION ATTEMPT
601
SILENT
15 ms
602
STEP + SETTLE
15 ms
603
DELAY
15 ms
604
604
605
.....
605
PROCESSING
5 ms
STEP CAPTURE
40 ms
PRx
PTx

FIG. 9

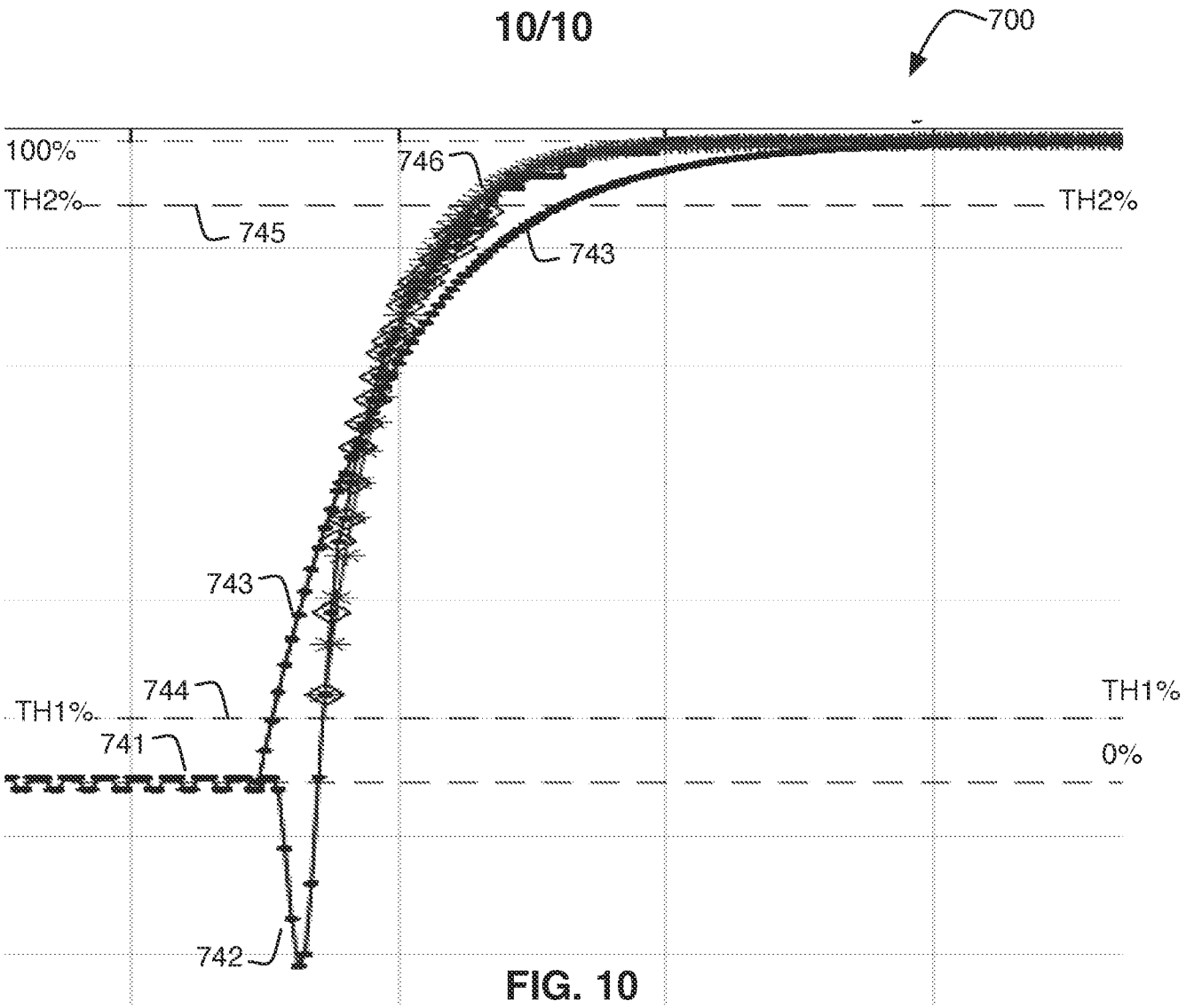
700
100%
TH2%
745
746
743
TH2%
743
744
TH1%
741
TH1%
0%
742

FIG. 10

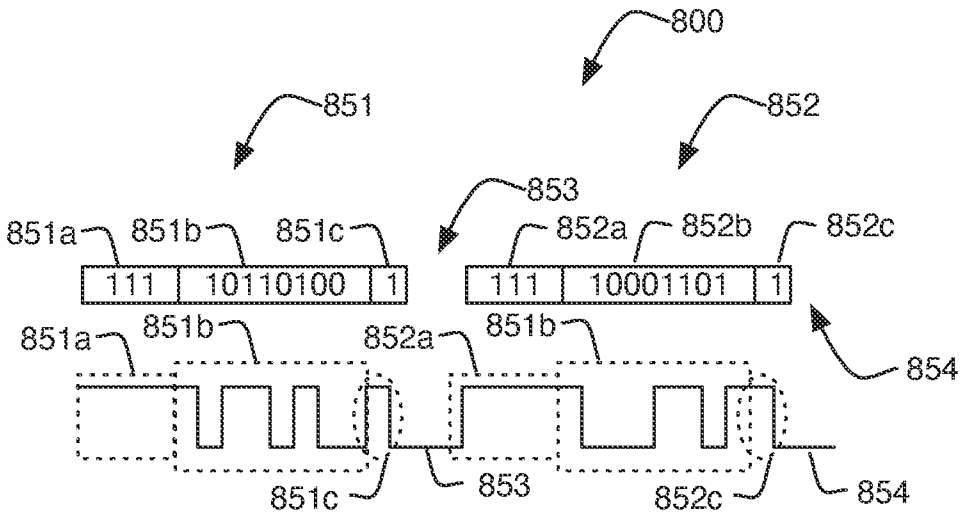
800
851
852
853
851a
851b
851c
852a
852b
852c
111
10110100
1
111
10001101
1
851a
851b
852a
851b
854
851c
853
852c
854

FIG. 11

INTERNATIONAL SEARCH REPORT

International application No
PCT/US2023/028172

A. CLASSIFICATION OF SUBJECT MATTER
INV. H02J50/80
ADD.

According to International Patent Classification (IPC) or to both national classification and IPC

B. FIELDS SEARCHED

Minimum documentation searched (classification system followed by classification symbols)
H02J

Documentation searched other than minimum documentation to the extent that such documents are included in the fields searched

Electronic data base consulted during the international search (name of data base and, where practicable, search terms used)
EPO-Internal

C. DOCUMENTS CONSIDERED TO BE RELEVANT

Category*	Citation of document, with indication, where appropriate, of the relevant passages	Relevant to claim No.
Y	US 2002/141347 A1 (HARP JEFFREY C [US] ET AL) 3 October 2002 (2002-10-03) paragraphs [0018] - [0026]; figures 3,4	1-19
Y	US 2021/242907 A1 (SHERMAN ITAY [IL] ET AL) 5 August 2021 (2021-08-05) paragraphs [0001], [0002], [0007], [0025] - [0038], [0045] - [0047], [0056]; figures 1-4	1-19

☐ Further documents are listed in the continuation of Box C.

☒ See patent family annex.

* Special categories of cited documents :

"A" document defining the general state of the art which is not considered to be of particular relevance

"E" earlier application or patent but published on or after the international filing date

"L" document which may throw doubts on priority claim(s) or which is cited to establish the publication date of another citation or other special reason (as specified)

"O" document referring to an oral disclosure, use, exhibition or other means

"P" document published prior to the international filing date but later than the priority date claimed

"T" later document published after the international filing date or priority date and not in conflict with the application but cited to understand the principle or theory underlying the invention

"X" document of particular relevance;; the claimed invention cannot be considered novel or cannot be considered to involve an inventive step when the document is taken alone

"Y" document of particular relevance;; the claimed invention cannot be considered to involve an inventive step when the document is combined with one or more other such documents, such combination being obvious to a person skilled in the art

"&" document member of the same patent family

Date of the actual completion of the international search	Date of mailing of the international search report
17 November 2023	05/12/2023

Name and mailing address of the ISA/	Authorized officer
European Patent Office, P.B. 5818 Patentlaan 2 NL - 2280 HV Rijswijk Tel. (+31-70) 340-2040, Fax: (+31-70) 340-3016	Bergler, Christian

1

INTERNATIONAL SEARCH REPORT

Information on patent family members

International application No
PCT/US2023/028172

Patent document cited in search report	Publication date	Patent family member(s)	Publication date
US 2002141347 A1	03-10-2002	NONE	
US 2021242907 A1	05-08-2021	CN 113541703 A	22-10-2021
		CN 116979975 A	31-10-2023
		EP 3863149 A1	11-08-2021
		US 2021242907 A1	05-08-2021
		US 2022216895 A1	07-07-2022