W. H. BURR.

COMBINED INDIAN CLUB AND DUMB BELL.

APPLICATION FILED DEC. 3, 1908.

937,225.

Patented Oct. 19, 1909.

2 SHEETS—SHEET 1.

Fig. 1

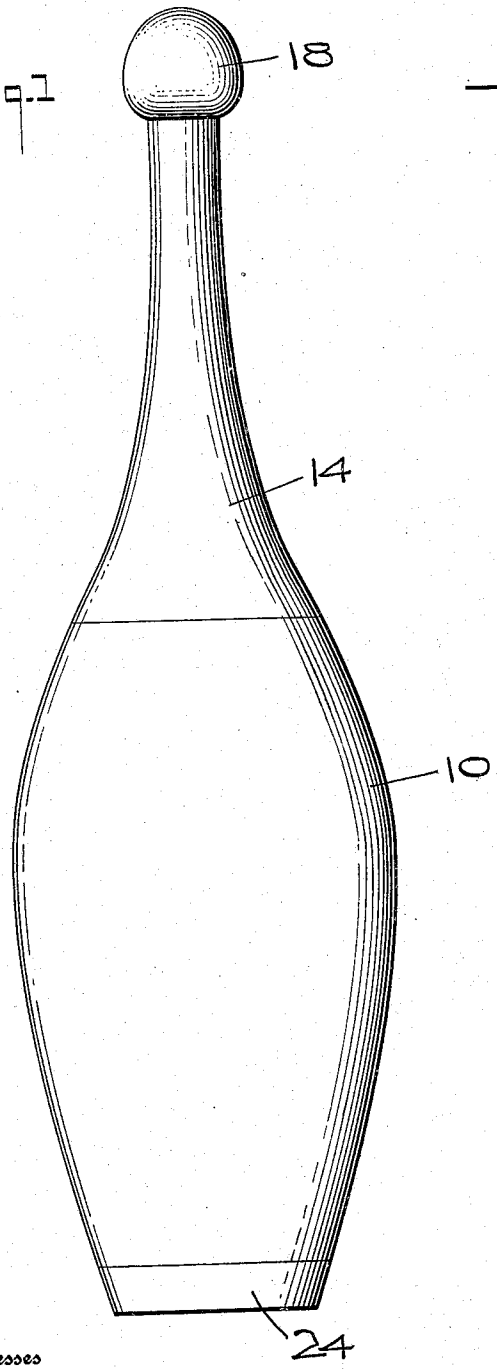

Fig. 2

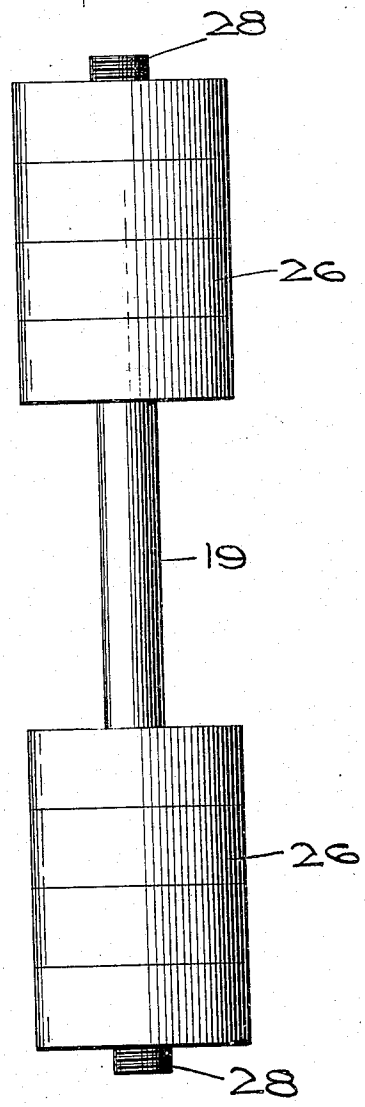

Witnesses

Ed. Rusby

E. L. Chandler

Inventor

William H. Burr

By Woodward & Chandler

Attorney

W. H. BURR.

COMBINED INDIAN CLUB AND DUMB BELL.

APPLICATION FILED DEC. 3, 1908.

937,225.

Patented Oct. 19, 1909.

2 SHEETS—SHEET 2.

Fig. 3

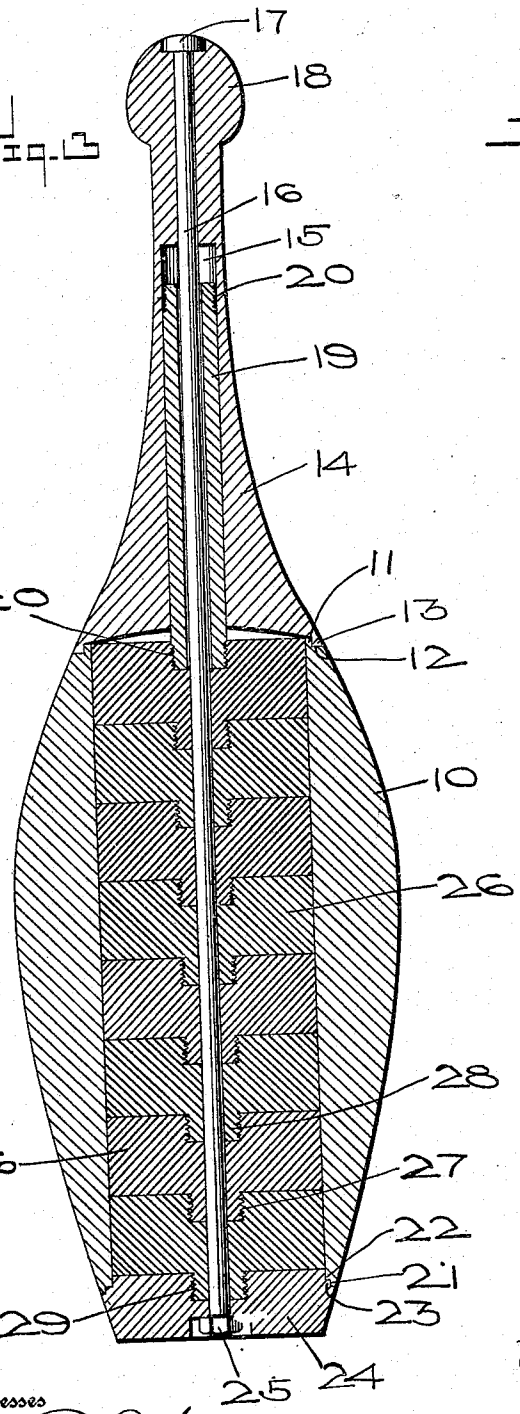

Fig. 4

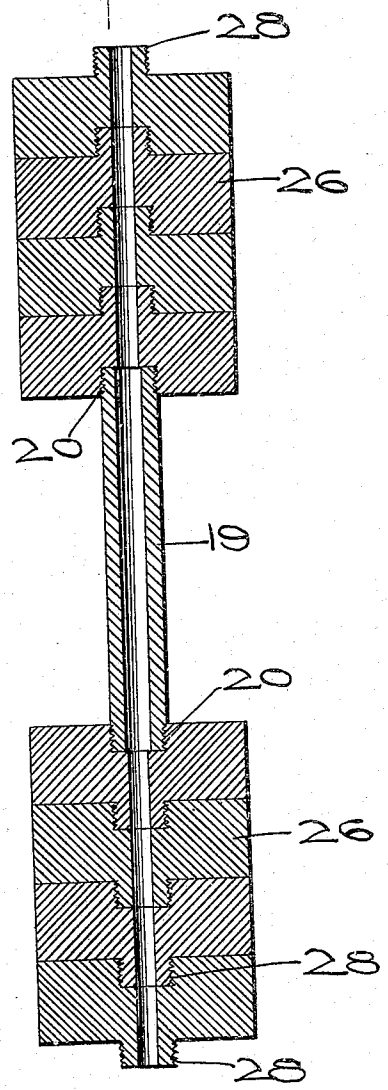

Witnesses

Ed. R. Lusby

E. L. Chandlee

Inventor

William H. Burr

By Woodward & Chandlee

Attorney

UNITED STATES PATENT OFFICE.

WILLIAM H. BURR, OF EL PASO, TEXAS.

COMBINED INDIAN CLUB AND DUMB-BELL.

937,225. Specification of Letters Patent. Patented Oct. 19, 1909.

Application filed December 3, 1908. Serial No. 465,821.

To all whom it may concern:

Be it known that I, WILLIAM H. BURR, a citizen of the United States, residing at El Paso, in the county of El Paso and State of Texas, have invented certain new and useful Improvements in Combined Indian Clubs and Dumb-Bells, of which the following is a specification.

This invention relates to exercising devices and refers particularly to a combined Indian club and dumb bell.

An object of the invention is to construct a device of this character which may be varied in weight when used as either the dumb bell or Indian club and one which will not decrease in size upon the reduction of weight when in the form of an Indian club.

Another object of the invention is the peculiar arrangement of the weights employed and in the manner of securing the same in position.

The invention has for a further object the provision of a device of this character which can be quickly and readily interchanged and which comprises but few operating parts so as to produce a device which is strong and easy to handle.

Other objects and advantages will be apparent from the following description, and it will be understood that changes in the specific structure shown and described may be made within the scope of the claims without departing from the spirit of the invention.

In the drawings forming a portion of this specification, and in which like numerals of reference indicate similar parts in the several views, Figure 1 is a side elevation of the device as set up in the form of an Indian club, Fig. 2 is a side elevation of the device as employed as a dumb bell, Fig. 3 is a longitudinal section through the Indian club, Fig. 4 is a longitudinal section through the dumb bell.

Referring to the drawings, 10 designates a cylindrical casing which is of uniform diameter throughout the interior thereof and which is enlarged intermediately of its outer surface to conform to the curvature of the body portion of an Indian club. The casing 10 is provided with an upwardly extended flange 11 which forms a shoulder 12 positioned outwardly of the flange 11 and against which is adapted to seat the flange 13 of the neck 14 of the Indian club. The neck 14 comprises an elongated member having a channel 15 disposed therethrough which is reduced in size at its upper extremity to closely incase a bolt 16 which is extended through the entire Indian club. The head 17 of the bolt 16 is countersunk within the knob 18 formed upon the upper extremity of the neck 14 for the purpose of securing the flange 13 against the shoulder 12. A sleeve 19 is loosely positioned about the bolt 16 within the channel 15 for the purpose of counterbalancing the Indian club. The sleeve 19 is provided with threaded portions 20 upon its opposite extremities for a purpose which will be hereinafter disclosed. The lower extremity of the casing 10 is provided with a flange 21 which extends downwardly and forms a shoulder 22 adjacent the inner face thereof against which is seated a shoulder 23 of a cap 24. The cap 24 is utilized in closing the lower end of the casing 10 and for the reception of the lower extremity of the bolt 16 which is secured thereon by a nut 25 countersunk within the outer face of the cap 24.

Within the casing 10 and disposed about the bolt 16 is a plurality of weights 26 which are circularly formed and which are provided in their upper faces with recesses 27 and carry depending shanks 28 from their lower faces. The depending shanks 28 are provided for engagement in the recesses 27 for the purpose of producing a unit weight from a plurality of smaller weights so as to form an Indian club which is apparently of solid construction. The weights are loosely mounted about the bolts 16 and are held in position by the cap 24 which is forced upwardly against the same to cause the uppermost weight 26 to impinge against the lower enlarged portion of the neck 14.

When it is desired to change the Indian club into a dumb bell the nut 25 is removed from the lower extremity of the bolt 16 and the cap 24 is released from engagement with the flange 21 of the casing 10. The weights 26 are now permitted to drop from the bottom of the casing 10 and be removed therefrom. The sleeve 19 is held within the neck 14 by the engagement of the threaded portion 20 into the recess 27 of the uppermost weight 26 and the sleeve 19 is therefore withdrawn from the neck 14 upon the removal of the weights 26 from the lower end of the casing 10. The lower half of the weights 26 are now disengaged from the upper member and

are secured upon the opposite extremity of the sleeve 19 thus forming a dumb bell employing the sleeve 19 as a handle to manipulate the same. If it is desired to decrease the weight of either the dumb bell or Indian club any number of weights can be readily detached from the same by disengaging them from the shanks 27.

The cap 24 is provided with a recess 29 in its inner face which is apertured to receive the shank 28 of the adjacent weight. This arrangement is for the purpose of holding one or more weights rigid within the casing 10 when the complete set of weights are not desired.

What is claimed is:—

1. An exercising device comprising a casing, a neck positioned against said casing, means for securing said neck and said casing together, a plurality of weights disposed within said casing, a sleeve carried by said weights and extended into said neck and a cap secured upon the lower end of said casing.

2. A device of the class described comprising a casing, a neck secured to said casing, a cap disposed upon the lower extremity of said casing, means engaged through said neck, said casing and said cap for securing the same in relative position, a sleeve disposed in said neck about said holding means and a plurality of interchangeable weights mounted about said holding means in said casing.

3. A device of the class described comprising a sleeve, having threaded extremities, a plurality of interchangeable weights engaged with said threads and means for carrying said sleeve and said weights when disengaged from one another.

4. A device of the class described comprising a casing, a neck disposed on said casing, a cap carried by said casing, means for holding the neck, casing and cap in position, a plurality of weights disposed in the casing and having threaded apertures formed in their upper faces, depending shanks carried upon the lower faces of said weights for engagement in the threaded apertures in the adjoining weights and a sleeve extended into said neck carried by the uppermost of said weights.

5. A device of the class described comprising a casing, a flange upwardly extended from the inner wall of said casing, a neck, a depended flange carried upon the lower enlarged extremity of said neck for engagement about said flange on said casing, said neck having a channel formed in the lower end thereof and a reduced channel extended through the upper extremity of the same, a knob formed upon the upper end of said neck, a bolt secured through the channels formed in said neck and extended through said casing, a flange extended from the outer wall of said casing at the lower extremity thereof, a cap positioned against the lower end of said casing, a shoulder formed about the outer edge of said cap for engagement with said flange upon the lower extremity of said casing, said cap adapted to receive the lower extremity of said bolt, a nut carried by said bolt countersunk in the outer face of said cap, a plurality of weights having recesses formed in their upper faces, depending shanks carried by said weights for engagement in the recesses formed in the adjoining weights and a sleeve loosely disposed about said bolt having a threaded extremity for engagement in the recess formed in the uppermost of said weights.

6. A device of the class described comprising a casing, a neck removably mounted upon the casing, a plurality of weights removably disposed within the casing, a member removably disposed within the casing and having means for detachably securing the weight upon the opposite ends to form a dumb bell, and a single means engaged with the said weights and with the said member to hold them within the casing, said means being also engaged with the neck to hold said neck upon the casing.

In testimony whereof I affix my signature, in presence of two witnesses.

WILLIAM H. BURR.

Witnesses:
G. D. Griggs,
Robt. T. Neill.