US007303414B2

(12) **United States Patent**
Chen et al.

(10) **Patent No.: US 7,303,414 B2**
(45) **Date of Patent: Dec. 4, 2007**

(54) **SURFACE CONTACT CARD HOLDER**

(75) Inventors: **Rui-Hao Chen**, Shenzhen (CN); **Hsiao-Hua Tu**, Tu-Cheng (TW); **Chia-Hua Chen**, Tu-Cheng (TW)

(73) Assignees: **ShenZhen FuTaiHong Precision Industry Co., Ltd.**, Shenzhen, Guangdong Province (CN); **Sutech Trading Limited**, Tortola (VG)

(*) Notice: Subject to any disclaimer, the term of this patent is extended or adjusted under 35 U.S.C. 154(b) by 0 days.

(21) Appl. No.: **11/309,319**

(22) Filed: **Jul. 26, 2006**

(65) **Prior Publication Data**

US 2007/0087600 A1 Apr. 19, 2007

(30) **Foreign Application Priority Data**

Oct. 14, 2005 (CN) 2005 1 0100379

(51) **Int. Cl.**
H01R 13/62 (2006.01)

(52) **U.S. Cl.** **439/155**; 439/923

(58) **Field of Classification Search** 439/159, 439/152, 153, 155, 923, 327
See application file for complete search history.

(56) **References Cited**

U.S. PATENT DOCUMENTS

6,382,995 B1 * 5/2002 Bricaud et al. 439/159

* cited by examiner

Primary Examiner—Javaid H. Nasri
(74) *Attorney, Agent, or Firm*—Jeffrey T. Knapp

(57) **ABSTRACT**

A holder for holding a surface contact card (**40**) includes a main body (**10**), a latch (**20**), a fixing portion (**18**) and an elastic element (**30**). The main body defines a receiving groove (**16**) and a sliding groove (**17**). The receiving groove is located at one side of the main body. The sliding groove is configured for receiving the surface contact card therein. The latch engages the receiving groove and selectably encloses one end of the surface contact card. The fixing portion is provided on the opposite side of the main body adjacent to the sliding groove. The elastic element sets in the fixing portion and configures for resisting the other end of the surface contact card. The elastic element provides a force allowing removal of the surface contact card.

20 Claims, 7 Drawing Sheets

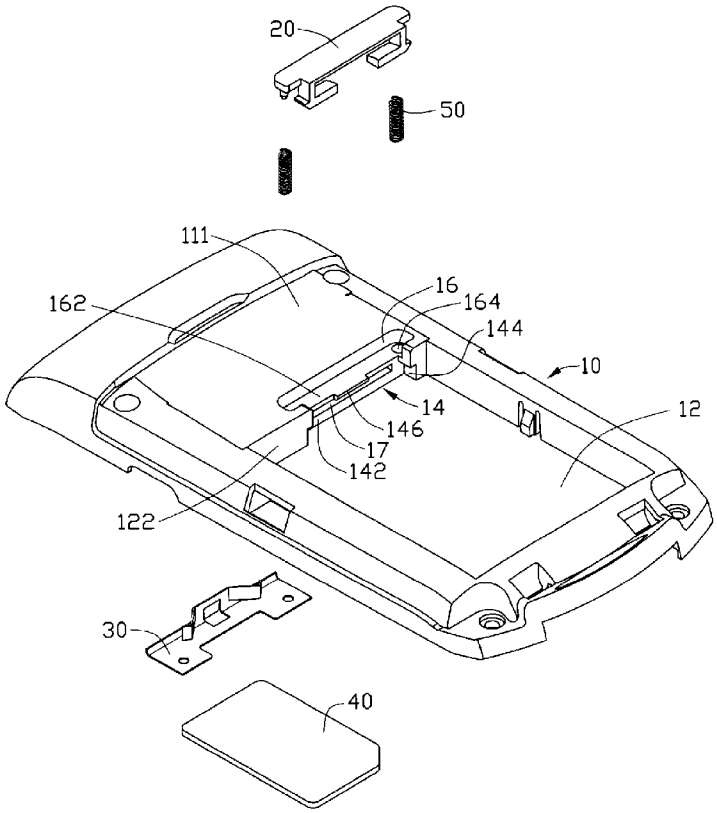

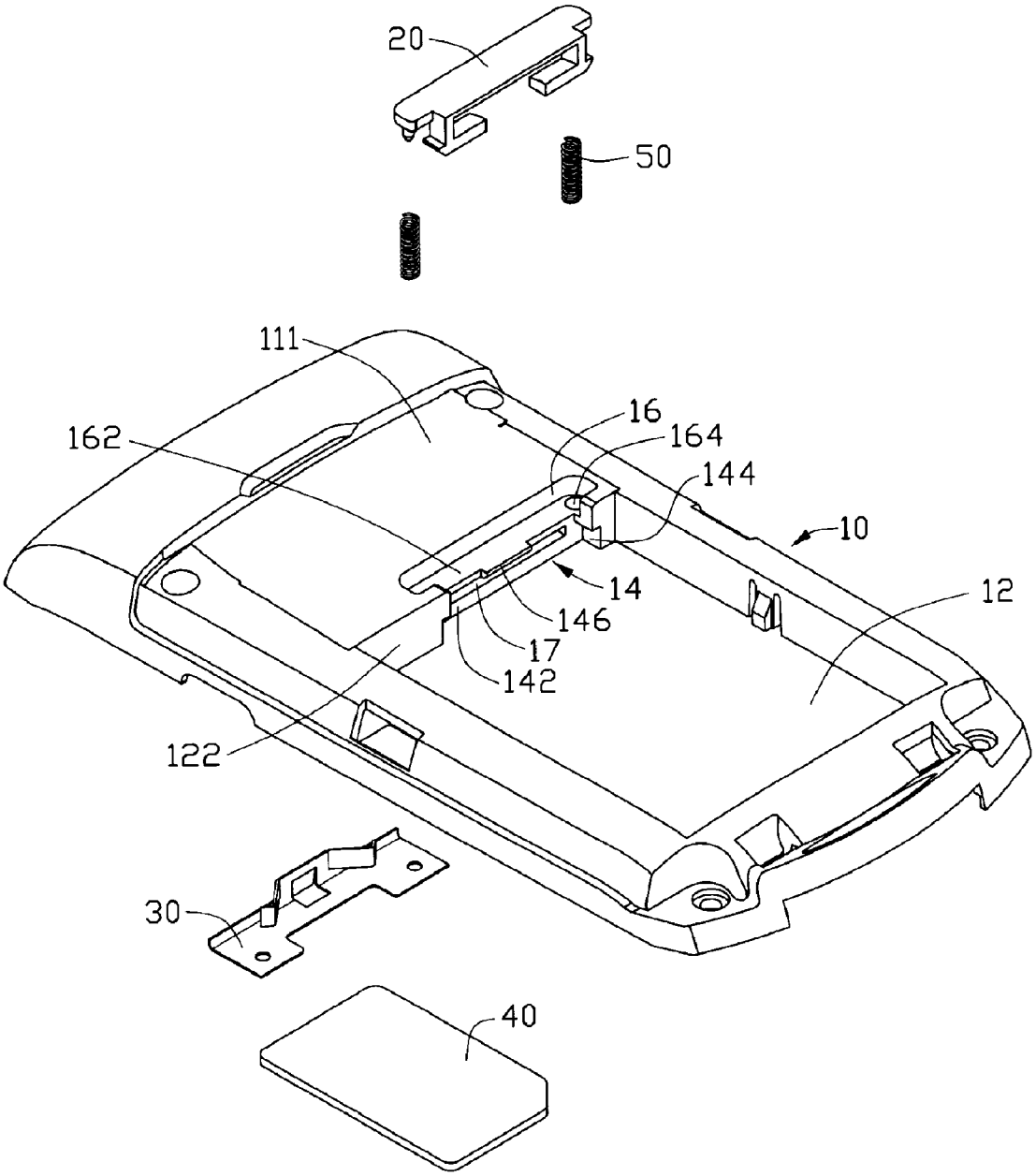

FIG. 1

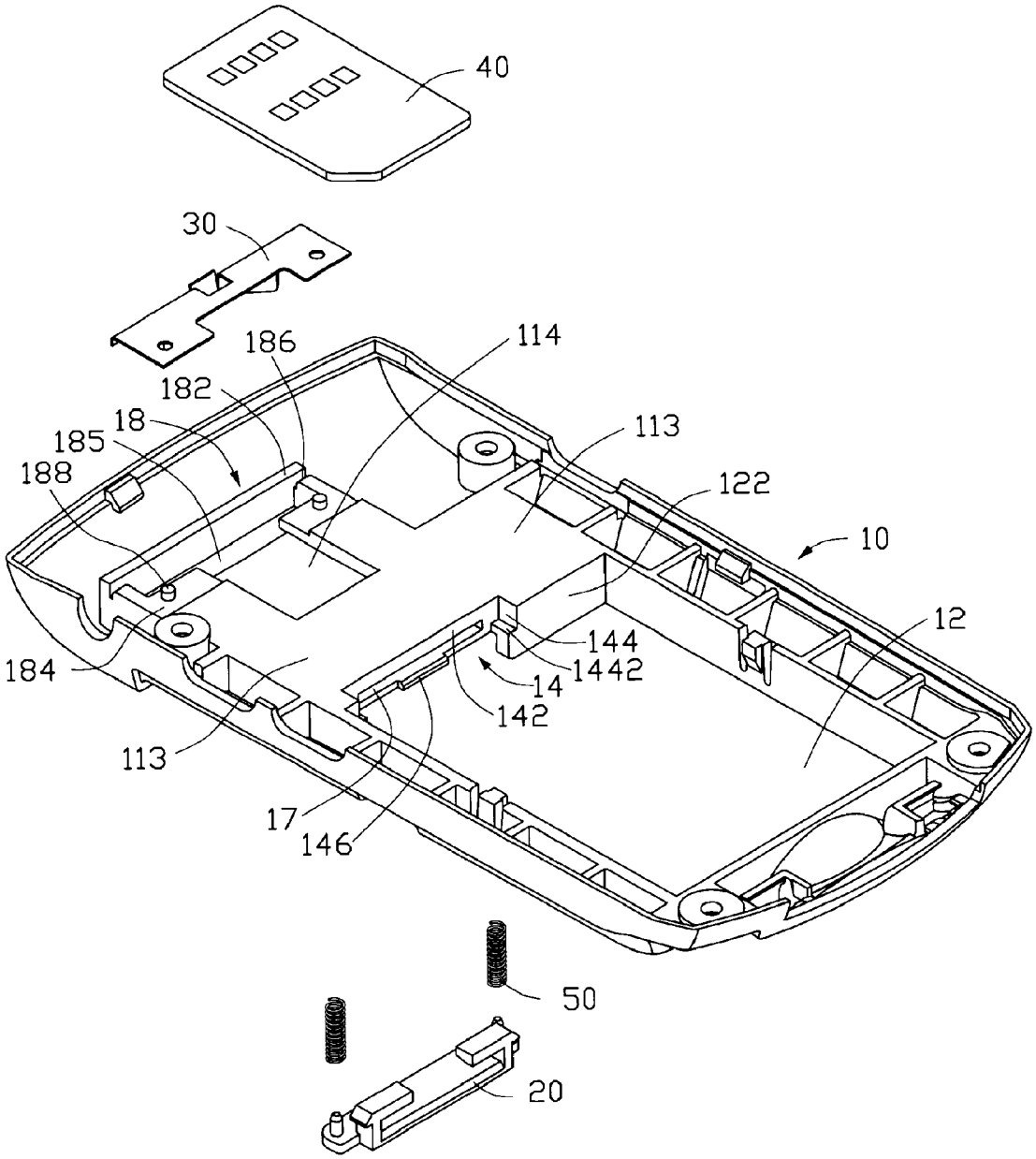
40
30
186
114
182
18
185
188
113
122
10
12
144
1442
14
142
184
113
17
146
50
20

FIG. 2

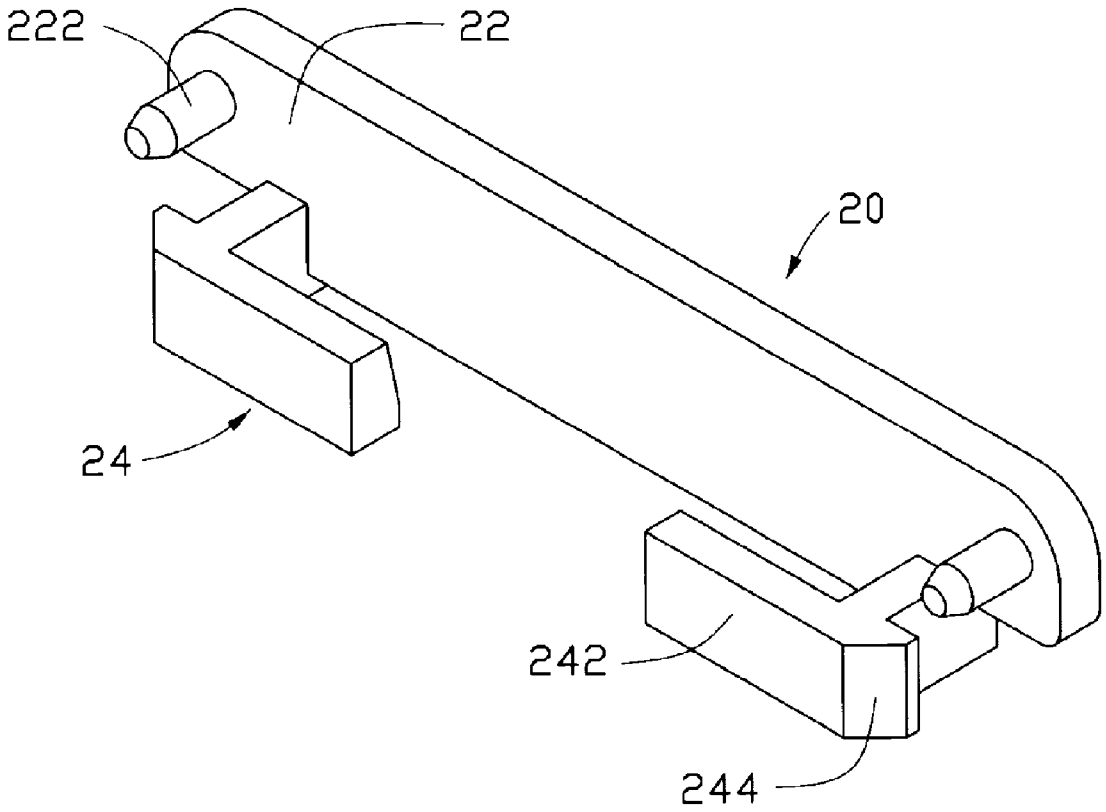

FIG. 3

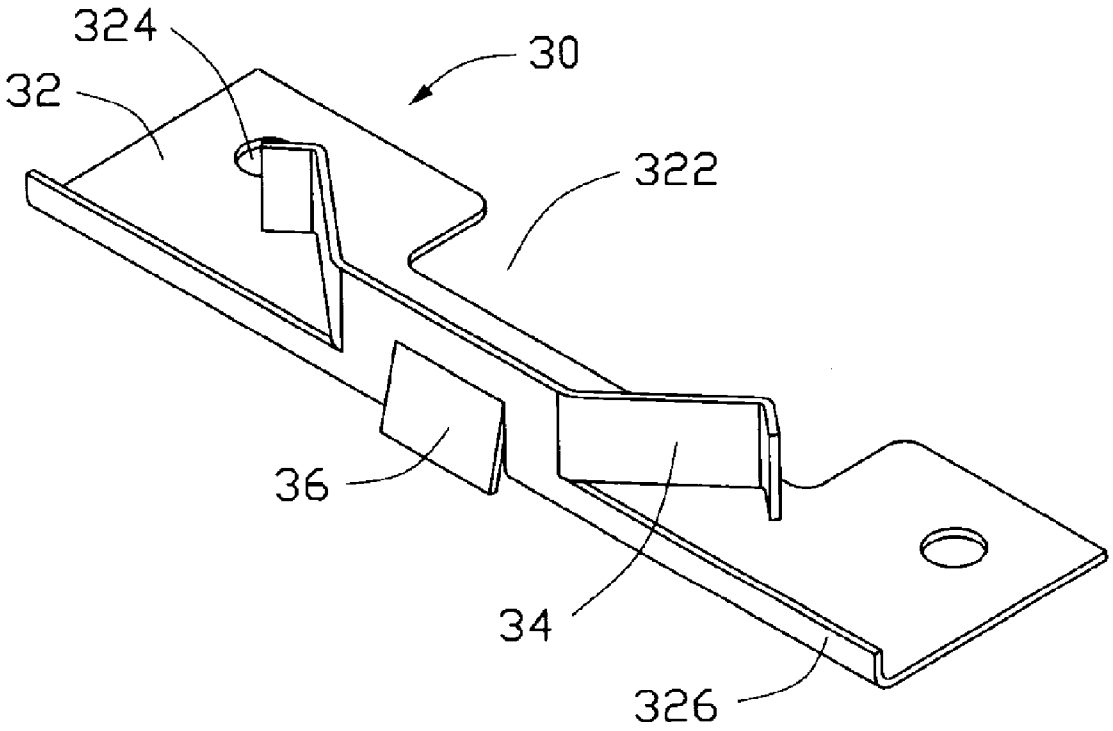

FIG. 4

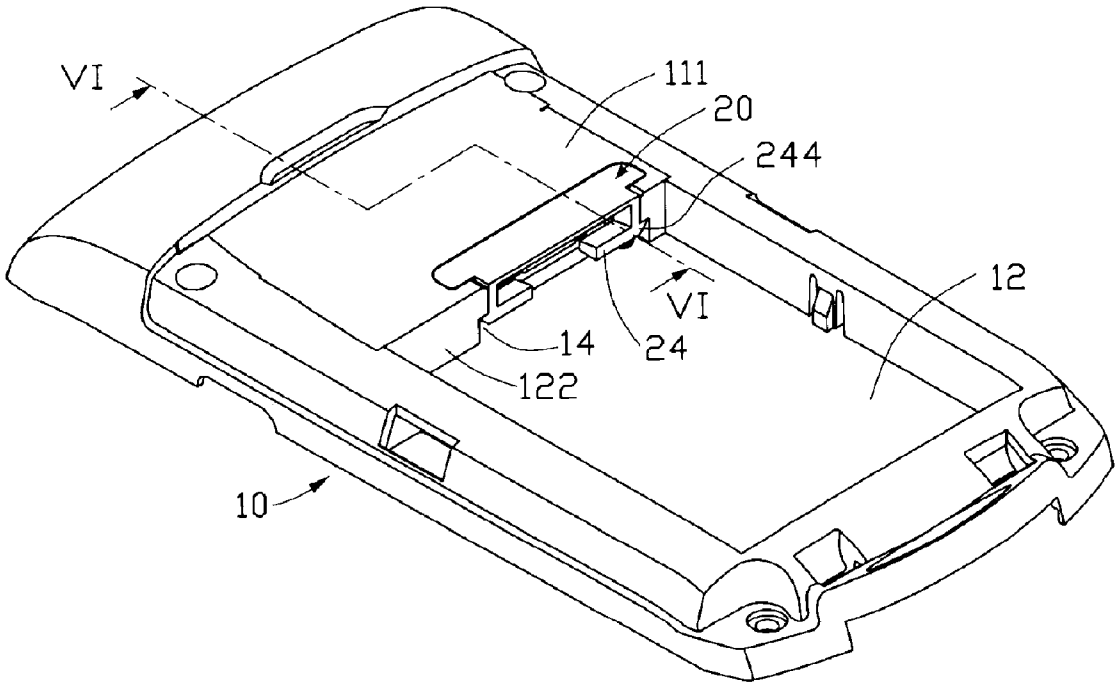

FIG. 5

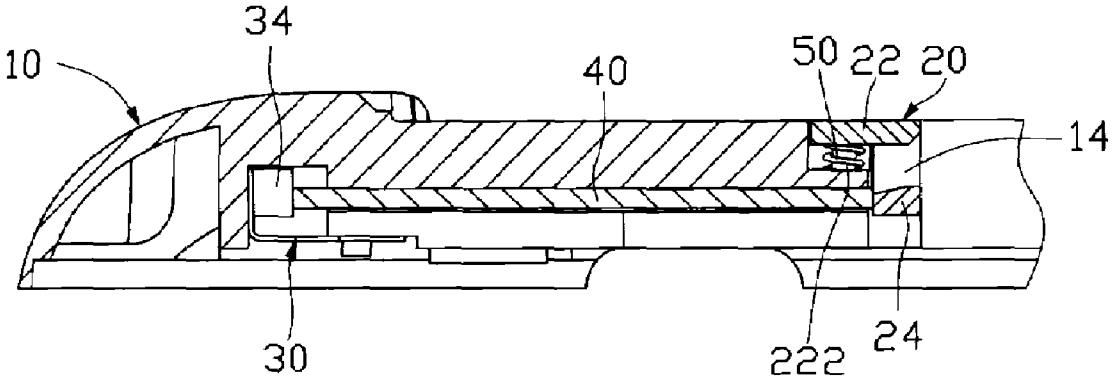

FIG. 6

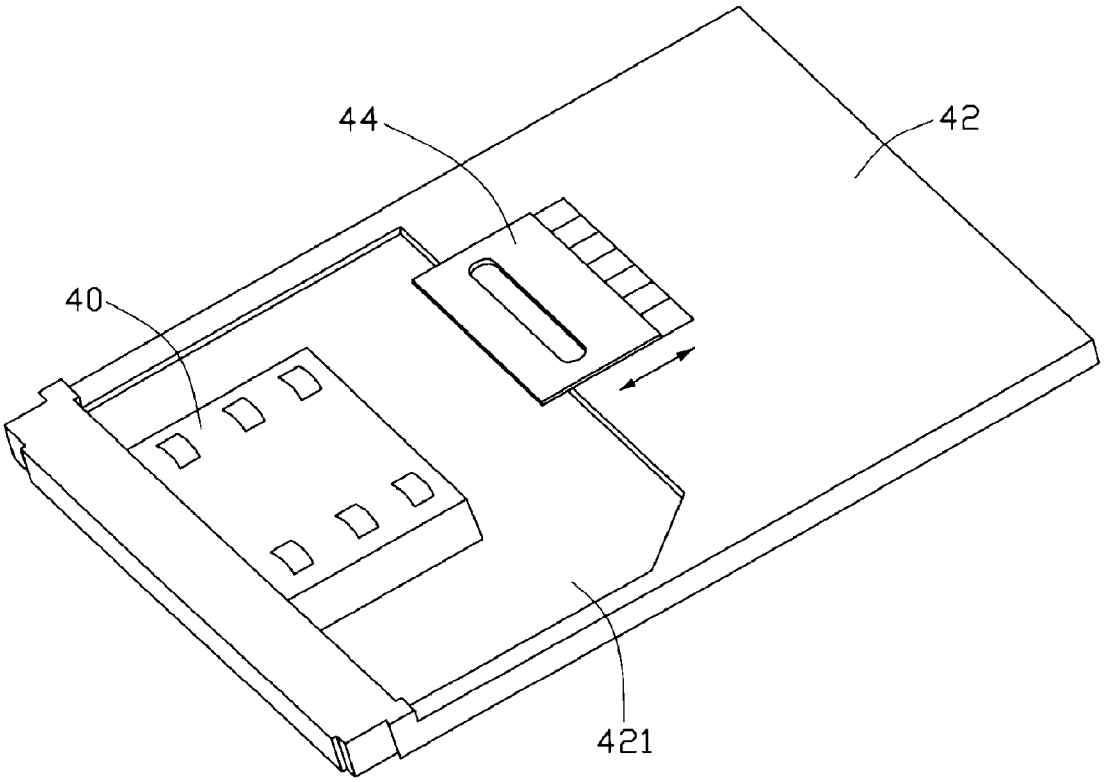

FIG. 7
(RELATED ART)

SURFACE CONTACT CARD HOLDER

FIELD OF THE INVENTION

The present invention generally relates to structures for holding card members in an electronic device and, particularly, to a surface contact card holder for holding a surface contact card in a portable electronic device.

DESCRIPTION OF RELATED ART

With the development of wireless communication and information processing technologies, portable electronic devices such as mobile phones are now in widespread use. These electronic devices enable consumers to enjoy high-tech services anytime and anywhere. Surface contact cards having special circuits are widely used in portable electronic devices to enhance or specialize the functions of the portable electronic devices. For example, a subscriber identity module (SIM) card can be placed in a mobile phone to dedicate the mobile phone' functions to the SIM card owner. By changing SIM cards, a single mobile phone can be used by many different SIM card owners as a personal phone.

Referring now to FIG. **7**, a conventional structure for holding a SIM card therein includes a base **42** made of insulating material and a holding structure **44**. The base **42** defines a receiving groove **421** and a SIM connector **40** including a plurality of contacts is set in the middle of the receiving groove **421**. The shape and size of the receiving groove **421** are the same as those of the SIM card. The holding structure **44** is located adjacent to one end of the receiving groove **421** and can be moved back and forth along the direction as indicated by the arrow shown in FIG. **7**.

In use, firstly, the holding structure **44** is moved away from the receiving groove **421** and the SIM card is inserted into the receiving groove **421**. Then, the holding structure **44** is moved adjacent to the receiving groove **421** so as to latch the SIM card in the receiving groove **421**. In the same way, the SIM card can be released by moving the holding structure **44** away from the receiving groove **421**.

In the above conventional structure for holding a SIM card, the holding structure **44** can be easily moved, if a mobile phone employing such a structure for holding a SIM card is dropped, the shock may easily force the holding structure **44** to move off the receiving groove **421**. As a result, the SIM card may not connect well with the SIM contactor or may even become separated from the receiving groove **421**. Obviously, such a conventional structure cannot hold the SIM card steadily in the receiving groove **421**.

Therefore, there is a need for a new surface contact card holder which can hold a surface contact card steadily in a portable electronic device.

SUMMARY OF THE INVENTION

In one embodiment, a holder for holding a surface contact card includes a main body, a latch, a fixing portion and an elastic element. The main body defines a receiving groove and a sliding groove. The receiving groove is located at one side of the main body. The sliding groove is configured for receiving the surface contact card therein. The latch engages in the receiving groove and selectably resists one end of the surface contact card. The fixing portion is positioned on the opposite side of the main body adjacent to the sliding groove. The elastic element is located the fixing portion and is configured for resisting the other end of the surface contact card. The elastic element provides a force allowing removal of the surface contact card.

Other advantages and novel features of the present embodiment will become more apparent from the following detailed description thereof when taken in conjunction with the accompanying drawings.

BRIEF DESCRIPTION OF THE DRAWINGS

Many aspects of the surface contact card holder can be better understood with reference to the following drawings. The components in the drawings are not necessarily drawn to scale, the emphasis instead being placed upon clearly illustrating the principles of the present surface contact card holder. Moreover, in the drawings, like reference numerals designate corresponding parts throughout the several views.

FIG. **1** is an exploded, isometric view of a surface contact card holder with a surface contact card in accordance with a preferred embodiment;

FIG. **2** is similar to FIG. **1** but viewed from another aspect;

FIG. **3** is an enlarged, schematic view of the latch shown in FIG. **1**;

FIG. **4** is an enlarged, schematic view of the elastic element shown in FIG. **1**;

FIG. **5** is an assembled view of the surface contact card holder with the surface contact card;

FIG. **6** is a cross-sectional view of the surface contact card holder taken along the VI-VI line in FIG. **5**; and

FIG. **7** is an assembled view of a conventional SIM card holder.

DETAILED DESCRIPTION OF THE INVENTION

The present surface contact card holder is suitable for portable electronic devices, such as mobile phones, PDAs, and so on. The surface contact card holder can be used for holding surface contact cards such as SIM cards, compact flash cards (CFs), multimedia cards (MMCs), and so on.

Referring now to the drawings in detail, FIGS. **1** and **2** show a surface contact card holder for a SIM card **40** incorporated in a mobile phone/portable electronic device. The mobile phone and the SIM card **40** are taken here as an exemplary application for the purposes of describing details of the surface contact holder of the preferred embodiment. The mobile phone includes a main body **10** with a first surface **111** and an opposite second surface **113**. A receiving cavity **12** is defined at the main body **10** for receiving a battery (not shown). The receiving cavity **12** communicates with the first surface **111** and the second surface **113**, and includes an end wall **122**.

The surface contact card holder includes a stepped groove **14**, a receiving groove **16**, a sliding groove **17**, a fixing portion **18**, a latch **20**, an elastic element **30** and two springs **50**. The stepped groove **14**, the receiving groove **16**, the sliding groove **17** and the fixing portion **18** are formed in the main body **10**.

The stepped groove **14** is defined in the end wall **122** of the main body **10**, and is defined cooperatively by a bottom portion **142** and two stepped walls **144**. Each stepped wall **144** has a step **1442**. Adjacent to the stepped groove **14**, the first surface **111** has the receiving groove **16** defined cooperatively by a bottom wall **162** and a peripheral wall. The receiving groove **16** is substantially rectangular in shape, and perpendicularly communicates with the stepped groove **14**. The bottom wall **162** defines two pin holes **164**, which

are blind holes. A protrusion **146** is formed at the intersection of the bottom portion **142** and the bottom wall **162**. The sliding groove **17** is defined in the bottom portion **142**, and is positioned under the bottom wall **162**. The shape and size of the sliding groove **17** are the same as those of the SIM card **40**, thus the sliding groove **17** may be used for receiving the SIM card **40**.

The second surface **113** defines a notch **114**, and the notch **114** communicates with the sliding groove **17**. The fixing portion **18** is formed adjacent to the sliding groove **17**. The fixing portion **18** includes a stopper board **182** and two connecting boards **184**. Each connecting board **184** is substantially L-shaped. A space **185** is cooperatively surrounded by the stopper board **182** and the connecting boards **184**. The space **185** communicates with the notch **114** and the sliding groove **17**. A slot **186** is defined between the stopper board **182** and the connecting boards **184**. Each connecting board **184** sets a pivotal shaft **188**. Each pivotal shaft **188** is substantially a short cylinder.

Referring to FIG. **3**, the latch **20** includes an operation portion **22** and two extending portions **24** perpendicularly extending from one side thereof. The shape of the operation portion **22** corresponds to that of the receiving groove **16** so that the operation portion **22** may be engaged in the receiving groove **16**. The operating portion **22** extends two spaced pins **222** from two sides of one end surface toward two extending portions **24**. Each pin **222** may be inserted into a corresponding pin hole **164**. Each extending portion **24** is substantially L-shaped, and has a horizontal end **242**. The horizontal ends **242** of two extending portions **24** are parallel to the operation portion **22**. Each extending portion **24** has a wedge end **244** opposite to a corresponding horizontal end **242**. A height of the operation portion **22** of the latch **20** is smaller than a depth of the receiving groove **16** so that the receiving groove **16** has a predetermined space allowing for the operation portion **22** to move upwards and downwards in the receiving groove **16**.

Referring also to FIG. **4**, the elastic element **30** may be sheet metal, and includes a main piece **32**. The main piece **32** is substantially a flat board defining an opening **322**, the opening **322** communicating with one side of the main piece **32**. The main piece **32** has a pivotal hole **324** defined at two sides of the opening **322**. The two pivotal shafts **188** of the fixing portion **18** may respectively engage in a corresponding pivotal hole **324**. A side piece **326** perpendicularly extends from one side of the main piece **32** opposite to the opening **322**. The side piece **326** further forms a bending piece **34** at one side thereof. The bending piece **34** is connected to a middle of the side piece **326**. Two sides of the bending piece **34** are respectively bent into a V-shape pointing toward the direction of the opening **322**. A resisting piece **36** is slantways formed in a middle of the bending piece **34** and the side piece **326** by cutting.

Each spring **50** is a cylindrical and helical element, and may be received in the pin hole **164**. A diameter of each spring **50** is larger than that of each pin **222** so that each spring **50** may be placed around a corresponding pin **222**.

During assembly, referring to FIGS. **5** and **6**, the main piece **32** of the elastic element **30** is placed on the fixing portion **18** of the main body **10**. Each pivotal hole **324** is aligned with a corresponding pivotal shaft **188** of the fixing portion **18**. Then, the elastic element **30** is pressed downward so that each pivotal hole **324** is placed around a given pivotal shaft **188**. At the same time, the side piece **326** engages in the slot **186**, with the resisting piece **36** resisting the stopper board **182** and the blending pieces **34** received in the space **185** of the fixing portion **18**. Accordingly, the elastic element **30** is attached to the main body **10**.

Next, the springs **50** are respectively placed around a corresponding pin **222**. The latch **20** is faced with the receiving groove **16**, with each pin **222** aligning with a corresponding pin hole **164**. The latch **20** is pressed downward so that each pin **222** of the latch **20** with a corresponding spring **50** together are inserted into a given pin hole **164**. Owing to the role of the springs **50**, the pins **222** are suspended in the pin holes **164**. At the same time, the extending portions **24** are lower into the stepped groove **14**, and the wedge ends **244** slide down along the stepped wall **144** until each wedge end **244** engages with a corresponding step **1442**. The horizontal ends **242** resist and partially enclose an entrance of the sliding groove **17** of the main body **10**. Accordingly, the latch **20** is attached to the main body **10**. Owing to the limitation of the step **1442**, the latch **20** cannot break away from the stepped groove **14**. The protrusion **146** may limit the movement range of the operation portion **22** of the latch **20**.

In use, the user presses the operation portion **22** of the latch **20** downward. Thus, the pins **22** resist the springs **50** and move downwards. The springs **50** are compressed, and the pins **22** moves downward in the pin holes **164**. After the latch **20** moves down until the extending portions **24** move away from the entrance of the sliding groove **17**, the SIM card **40** is partially inserted into the sliding groove **17**. Then, the user pushes one end of the SIM card **40** so that the SIM card **40** is entirely received into the sliding groove **17**. The other end of the SIM card **40** presses into the elastic element **30** so that the bending piece **34** is deformable. After that, the user releases the latch **20** so that the latch **20** automatically returns the original position under the role of the springs **50**. The extending portions **24** resist the entrance of the sliding groove **17** again so as to hold the SIM card **40**. The SIM card **40** abuts the PCB. The battery (not shown) is received in the receiving cavity **12**, with the battery abutting the latch **20**. The battery can prevent the latch **20** from becoming separated from the main body **10**. Thus, the SIM card **40** is held steadily in the main body **10**.

To remove the SIM card **40**, the user pushes the operation portion **22** of the latch **20**, and presses the latch **20** downward. Thus, the extending portions **24** move away from the sliding groove **17**. The SIM card **40** is pushed out by the elastic element **30** exerting a force on the SIM card **40**. Accordingly, the SIM card **40** is taken out from the sliding groove **17**.

In alternative embodiments, the stepped groove **14** may be not set adjacent to the receiving cavity **12**, and is positioned outside of the main body **10**. Accordingly, the SIM card **40** may easily be taken out without removing the battery. Alternatively, the stepped groove **14** may be omitted, and the latch **20** may be limited by other structures.

In a still further alternative embodiment, the fixing portion **18** and the elastic element **30** disclosed above may be replaced with other structures. Understandably, the fixing portion **18** may be omitted, and the elastic element **30** may be fixed in the main body **10** using adhesive. The elastic element **30** acts as a pushing element attached to the main body and exerts a force acting on the SIM card **40**, the latch **20** is slidable relative to the receiving SIM card groove so as to allow the insertion and removal of the SIM card **40**, and the pushing element serves to eject the SIM card **40** from the receiving SIM card groove. The latch **20** also may be replaced with other structures so that the latch may selectably resist one end of the SIM card **40**.

It is believed that the present embodiments and their advantages will be understood from the foregoing description, and it will be apparent that various changes may be made thereto without departing from the spirit and scope of the invention or sacrificing all of its material advantages, the examples hereinbefore described merely being preferred or exemplary embodiments of the invention.

What is claimed is:

1. A holder for holding a surface contact card comprising:

a main body defining a receiving groove and a sliding groove, the receiving groove set at one side of the main body, the receiving groove including a groove bottom wall and a groove periphery, the sliding groove being configured for receiving the surface contact card therein;

a latch engaging in the receiving groove and configured for selectably moving one of upward and downward relative to the groove bottom wall, the latch thereby being movable between an up latch position and a down latch position, the latch being configured for selectably resisting one end of the surface contact card when in the up latch position thereof;

a fixing portion on the opposite side of the main body adjacent to the sliding groove; and

an elastic element located in the fixing portion and configured for resisting the other end of the surface contact card, the elastic element providing a force allowing removal of the surface contact card.

2. The holder as claimed in claim **1**, wherein the main body further defines a stepped groove, the stepped groove perpendicularly communicates with the receiving groove and the sliding groove.

3. The holder as claimed in claim **2**, wherein the latch includes an operation portion and at least one extending portion, the operation portion is received in the receiving groove, and the at least one extending portion is received in the stepped groove so as to block one end of the sliding groove.

4. The holder as claimed in claim **3**, wherein the number of the extending portions is two, each extending portion includes a horizontal end and an opposite wedge end, each horizontal end resists one end of the sliding groove, and each wedge end engages with the stepped groove.

5. The holder as claimed in claim **3**, wherein the operation portion extends two spaced pins, the receiving groove is defined by a bottom wall, the bottom wall defines two pin holes, and each pin engages in a corresponding pin hole.

6. The bolder as claimed in claim **5**, further comprising two springs, each spring is placed around each pin, and each pin is received together with each spring in a corresponding pin hole.

7. The holder as claimed in claim **1**, wherein the fixing portion includes a stopper board and two connecting boards, each connecting board defines a pivotal shaft, the elastic element includes a main piece and a bending piece, the main pieces defines two pivotal holes for receiving the pivotal shafts.

8. The holder as claimed in claim **7**, wherein an intersection between the stopper board and the connecting boards defines a slot, the elastic element further comprises a side piece, the side piece is connected with the main piece and the bending piece, and the side piece engages in the slot.

9. The holder as claimed in claim **8**, wherein the elastic element further comprises a resisting piece, the resisting piece is formed in a middle of the side piece and the bending piece, the resisting piece resists the stopper board, and the bending piece is V-shaped.

10. A holder for holding a surface contact card in a portable electronic device having a device body, the holder comprising:

a sliding groove being configured for receiving the surface contact card;

a receiving groove being set at one side of the device body;

a stepped groove perpendicularly communicates with the receiving groove and the sliding groove;

a pushing element attached to the device body and exerting a force on the surface contact card; and

a latch configured for resisting one end of the surface contact card;

wherein the latch is slidable relative to the sliding groove so as to allow the insertion and removal of the surface contact card, and the pushing element serves to eject the surface contact card from the receiving groove.

11. The holder as claimed in claim **10**, wherein the latch includes an operation portion and two extending portions, the operation portion is received in the receiving groove, and the two extending portions are received in the stepped groove so as to block one end of the sliding groove.

12. The holder as claimed in claim **11**, wherein the operation portion extends two spaced pins, the receiving groove is defined by a bottom wall, the bottom wall defines two pin holes, and each pin engages in a corresponding pin hole.

13. The holder as claimed in claim **12**, further comprising two springs, each spring is placed around each pin, and each pin with each spring together is received in a corresponding pin hole.

14. The holder as claimed in claim **10**, wherein the device body includes a fixing portion, the fixing portion includes a stopper board and two connecting boards, each connecting board defines a pivotal shaft, the pushing element includes a main piece and a bending piece, the main piece defines two pivotal holes for receiving the pivotal shafts.

15. The holder as claimed in claim **14**, wherein an intersection between the stopper board and the connecting boards defines a slot, the pushing element further comprises a side piece and a resisting piece, the side piece is connected with the main piece and the bending piece, the side piece engages in the slot, the resisting piece is formed in a middle of the side piece and the bending piece, the resisting piece resists the stopper board, and the bending piece is V-shaped.

16. A portable electronic device comprising:

a device body defining a first groove, a second groove, and a third groove, the first groove and the second groove being configured for receiving a latch and the third groove for receiving a surface contact card, the first groove being in communication with the second groove, the latch selectably blocking one end of the third groove so as to keep the contact surface card in the third groove; and

an elastic element set on the other end of the surface contact card and configured for pushing the surface contact card out of the third groove.

17. The portable electronic device as claimed in claim **16**, wherein the latch includes an operation portion and two extending portions, the operation portion is received in the first groove, the two extending portions are positioned at the second groove and block one side of the third groove.

18. The portable electronic device as claimed in claim **17**, further comprising two springs, wherein the operation portion extends two spaced pins, the first groove is defined by a bottom wall, the bottom wall defines two pin holes, and

each pin engages in a corresponding pin hole, each spring is placed round a given pin, and each pin is received together with each spring in a corresponding pin hole.

19. The portable electronic device as claimed in claim **18**, further comprising a fixing portion, the fixing portion is formed in the device body, the fixing portion includes a stopper board and two connecting boards, each connecting board defines a pivotal shaft, the elastic element includes a main piece and a bending piece, the main piece defines two pivotal holes for receiving the pivotal shafts.

20. The portable electronic device as claimed in claim **16**, wherein a receiving cavity is defined in the device body adjacent to the second groove, the receiving cavity is configured for receiving a battery.

* * * * *