No. 718,344. PATENTED JAN. 13, 1903.

T. V. HAMPTON.

COMPOUND BEVEL AND SQUARE.

APPLICATION FILED AUG. 9, 1902.

NO MODEL.

Fig. 1.

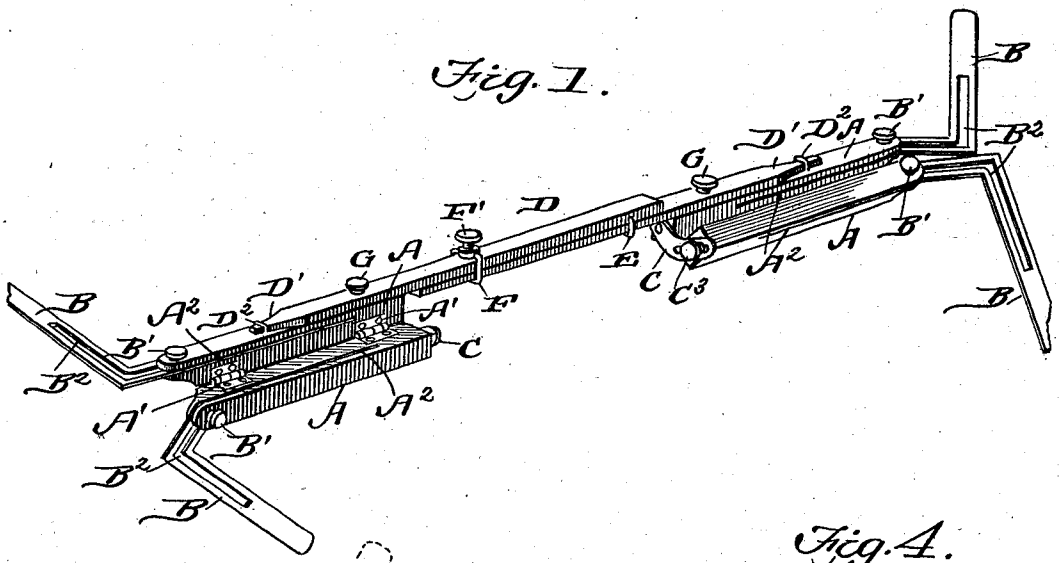

Fig. 2.

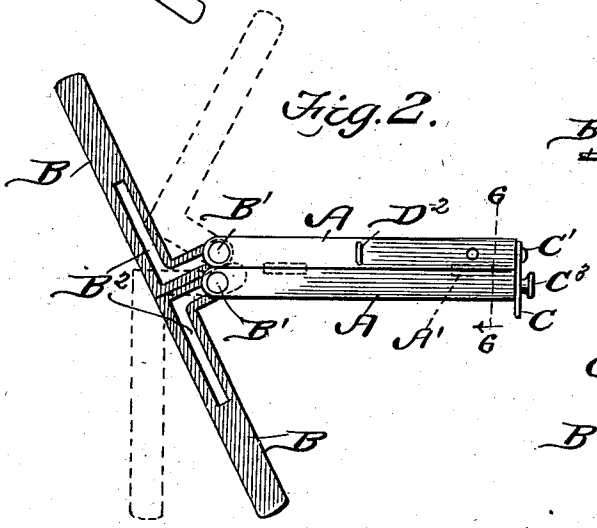

Fig. 4.

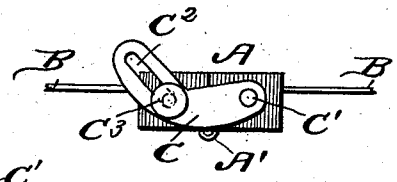

Fig. 5.

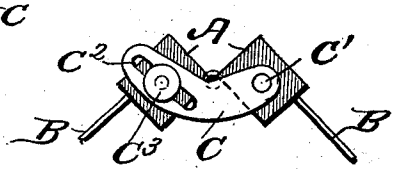

Fig. 6.

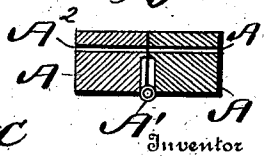

Fig. 3.

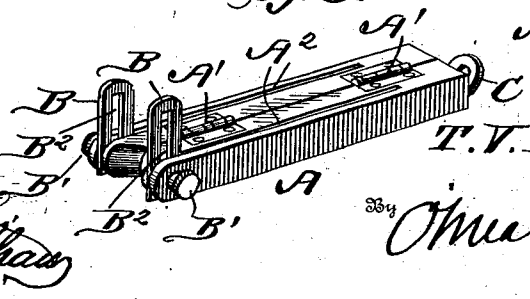

Witnesses

M. D. Blondel

Clarence Shaw

Inventor

T. V. Hampton.

By O'Meara & Brock

Attorneys

UNITED STATES PATENT OFFICE.

THOMAS VOLNEY HAMPTON, OF BOWLING GREEN, KENTUCKY.

COMPOUND BEVEL AND SQUARE.

SPECIFICATION forming part of Letters Patent No. 718,344, dated January 13, 1903.

Application filed August 9, 1902. Serial No. 119,026. (No model.)

To all whom it may concern:

Be it known that I, THOMAS VOLNEY HAMPTON, a citizen of the United States, residing at Bowling Green, in the county of Warren and State of Kentucky, have invented a new and useful Improvement in Compound Bevels and Squares, of which the following is a specification.

This invention is a compound bevel and square, the object being to provide a tool particularly adapted for use for carpenters, shipbuilders, and millwrights by means of which they can accurately gage the length of a piece of timber or spouting to be cut and also gage the angle upon which the ends are to be cut, thereby making accurate joints and avoiding all misfits.

Another object of the invention is to provide a tool of this kind by means of which work of this character can be more quickly accomplished than by any of the tools now in common use.

With these objects in view the invention consists in the details of construction and novelties of combination and arrangement hereinafter fully described, and pointed out in the claims.

In the drawings forming part of this specification, Figure 1 is a perspective view of a tool constructed in accordance with my invention. Fig. 2 is a top plan view of one end of said tool, the sections being folded together and the beveled squares extended. Fig. 3 is a detail perspective view showing one end, the blades of the bevel squares being folded into the stocks. Fig. 4 is an inner face view of one end, illustrating the means of securing the stocks in their adjusted positions. Fig. 5 is a similar view showing the stocks adjusted at an angle to each other, and Fig. 6 is a transverse sectional view taken on the line 6 6 of Fig. 2.

Broadly speaking, my invention consists of four bevel-squares or bevel-blades, each carried by a stock, said stocks being arranged in pairs hinged together, and each pair of stocks is connected by means of an adjustable or extensible connecting-rod.

Referring to the drawings, A indicates the stocks or strips, which are preferably made of hard wood, each pair of stocks being connected by means of hinges A′. Each stock is slotted longitudinally, as shown at A^2, and pivoted in the said slot adjacent to the forward end thereof is the square or bevel blade B, adjustably secured by means of a set-screw B′, which passes through the right-angular slot B^2, produced in the said blade. It will, of course, be understood that each blade is adjustable in its respective stock, and each blade is of course independent of the others. By having the stocks pivoted a variety of adjustments can be had.

In order to securely fasten the stocks in any adjusted position, I employ a plate C, pivoted at C′ to the inner end of one of the stocks, the opposite end of said plate being slotted, as shown at C^2, and through which the set-screw C^3 passes into the end of the other stock, the plate C being angular in shape. This permits the stocks to be adjusted at various angles, and after being so adjusted they can be locked in that position by tightening the set-screw. The stocks are connected by means of the adjustable or extension rods D, the outer ends of which are reduced or tapered, as shown at D′, for the purpose of engaging the staples or clips D^2, arranged upon the upper face of the stocks. One of the rods D has a loop E connected thereto and through which the other rod passes. A bail F, adjustable upon the rods, has a set-screw F′ for the purpose of tightly binding the rods together after they have been adjusted. A set-screw G also passes through each rod into the stock, thereby securely connecting each rod to its respective stock. The rods being slidable upon each other, it is obvious that by loosening the set-screw F′ they can be moved so as to bring the stocks toward each other or away from each other after the distance has been gaged. The set-screw can be tightened, and the tool will then be set in its proper position. In operation the connecting-rods are first adjusted so as to gage the distance between any two points which it is desired to connect either by a piece of timber or spouting. The blades, together with the stocks, are then adjusted so that the said blades will exactly indicate the angle upon which the ends of the timber or spouting are to be cut, and inasmuch as each blade and each pair of stocks is independent of the other it is obvious that

any angle can be gaged, and by securing the blades and the stocks in their adjusted positions the tool can be removed and placed upon the timber or spout to be cut and the exact lines marked upon said timber or spout, so that when the said timber or spout is cut it will fit exactly between the points which it is intended to connect and all danger of misfit entirely avoided.

By constructing a tool as herein shown and described one skilled laborer is enabled to do the work heretofore requiring the services of two or more skilled laborers.

Having thus fully described my invention, what I claim as new, and desire to secure by Letters Patent, is—

1. A tool of the kind described, comprising two pairs of stocks, the stocks of each pair being hinged together, each stock carrying an adjustable bevel or square at its outer end, the inner ends of each pair of stocks being connected by means of an adjustable connection for the purpose specified.

2. A tool of the kind described, comprising stocks hinged together in pairs, each stock having a square or bevel blade connected thereto, each pair of stocks being provided with means for locking them in their adjusted positions, and the extensible connection between two pairs of stocks, for the purpose specified.

3. In a tool of the kind described, the combination with the stocks hinged together in pairs, each stock being longitudinally slotted and carrying a square or bevel blade, a slotted plate pivoted to the inner end of one of each pair of the stocks, the set-screw passing through the slot of the plate into the end of the other stock of the pair, the sectional extension-rod having tapered ends connecting two pairs of stocks, the staples carried by the stocks adapted to receive the tapered ends of the rod, and a bail and set-screw carried by the rod; all arranged and adapted to operate as specified.

THOMAS VOLNEY HAMPTON.

Witnesses:
M. M. ENNIS,
E. B. SUMPTER.