US005929510A

United States Patent [19]

Geller et al.

[11] **Patent Number: 5,929,510**

[45] **Date of Patent: Jul. 27, 1999**

[54] **INTEGRATED ELECTRONIC CIRCUIT**

[75] Inventors: **Bernard Dov Geller**, Princeton, N.J.; **Aly E. Fathy**, Langhorne, Pa.; **Stewart M. Perlow**, Marlboro, N.J.; **Ashok Naryan Prabhu**, East Windsor, N.J.; **Ellen Schwartz Tormey**, Princeton Jct., N.J.; **Valerie Ann Pendrick**, Cranford, N.J.; **Israel Haim Kalish**, West Orange, N.J.

[73] Assignees: **Sarnoff Corporation**, Princeton, N.J.; **Sharp Kabushiki Kaisha**, Osaka, Japan

[21] Appl. No.: **08/960,663**

[22] Filed: **Oct. 30, 1997**

Related U.S. Application Data

[63] Continuation-in-part of application No. 08/741,809, Oct. 31, 1996, abandoned

[60] Provisional application No. 60/029,417, Oct. 31, 1996.

[51] **Int. Cl.**[6] **H01L 29/40**; H01P 1/15; H05K 1/00

[52] **U.S. Cl.** **257/635**; 257/691; 257/668; 257/664; 257/685; 257/728; 257/706; 333/204

[58] **Field of Search** 257/635, 691, 257/668, 664, 685, 728, 706; 333/204

[56] **References Cited**

U.S. PATENT DOCUMENTS

5,206,712 4/1993 Kornprumpg et al. 333/204
5,387,888 2/1995 Eda et al. 257/728
5,559,363 9/1996 Immorlica, Jr. 257/664
5,654,681 8/1997 Ishizaki et al. 333/204
5,783,976 7/1998 Furutani et al. 333/204

FOREIGN PATENT DOCUMENTS

4319878-A1 12/1993 Germany .

Primary Examiner—Peter Toby Brown
Assistant Examiner—Hung Van Duong
Attorney, Agent, or Firm—William J. Burke

[57] **ABSTRACT**

An electronic integrated circuit which includes at least one of RF, microwave, digital and analog components connected in a desired circuit. The integrated circuit includes a substrate of a conductive material having on a surface thereof a body of a dielectric material. The dielectric body is formed of a plurality of layers of the dielectric material bonded together. A plurality of strips of a conductive material are on the surfaces of the layers of the body to form RF, analog and digital components. Discrete electronic devices are mounted on the body and connected in the circuit. Vias of a conductive material extend through the various layers of the body to electrically connect the various strips of conductive material on the layers of the body.

9 Claims, 2 Drawing Sheets

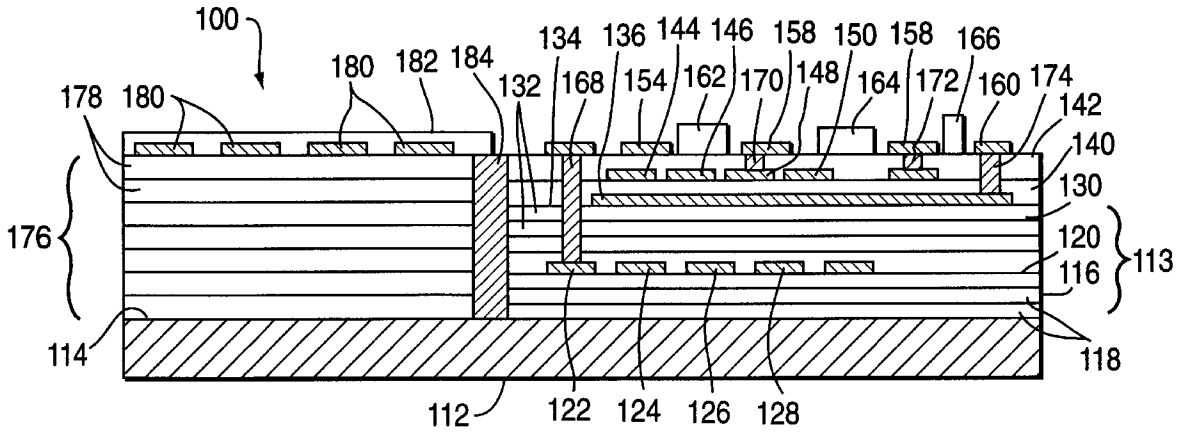

FIG. 1

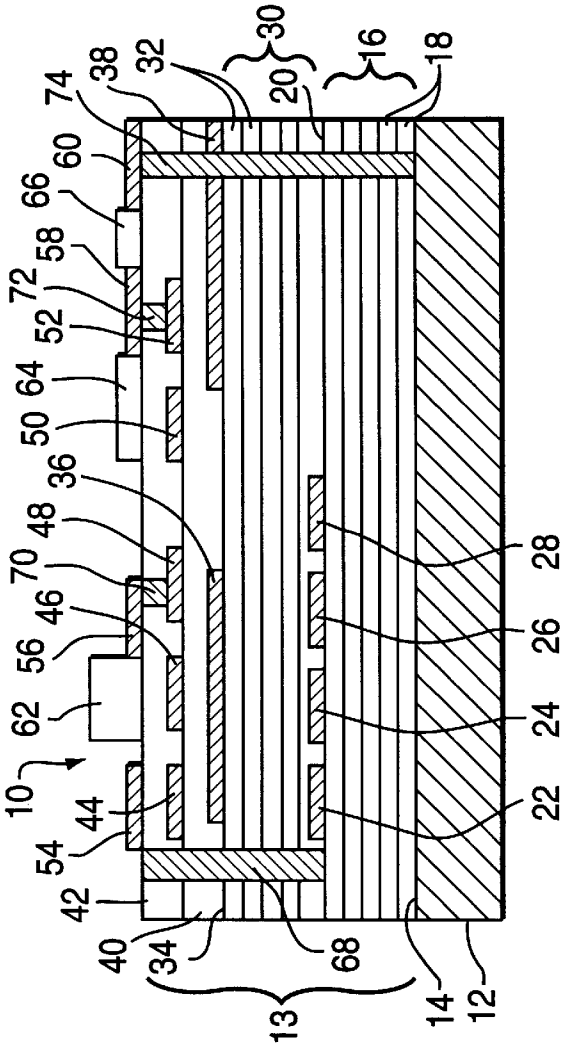
74
38
32
30
20
16
18
60
66
58
72
52
64
50
36
48
70
46
56
62
10
44
54
42
40
34
13
68
14
12
22
24
26
28

FIG. 2

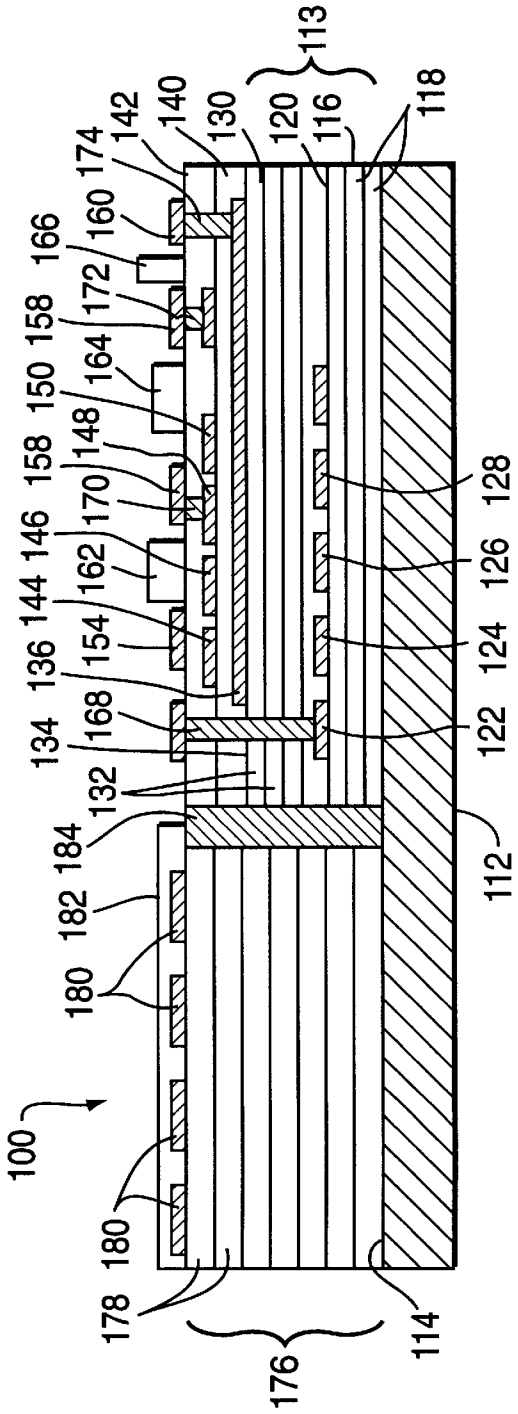
113
118
116
120
130
140
142
174
160
166
172
158
164
150
148
158
170
146
162
144
154
136
168
134
132
184
182
180
100
180
178
176
114
112
122
124
126
128

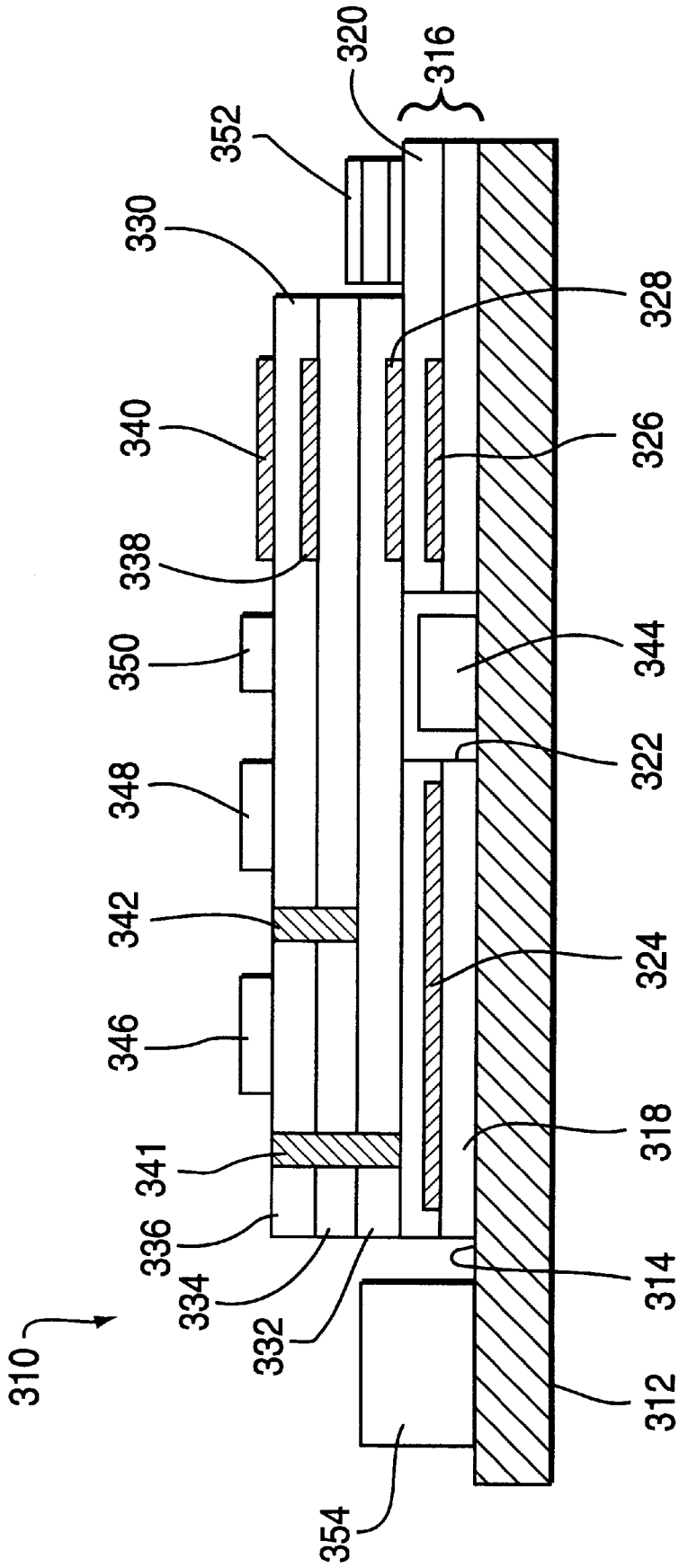
310
312
314
316
318
320
322
324
326
328
330
332
334
336
338
340
341
342
344
346
348
350
352
354

FIG. 3

INTEGRATED ELECTRONIC CIRCUIT

CROSS-REFERENCES TO RELATED APPLICATIONS

This application is a continuation-in-part of U.S. application Ser. No. 08/741,809, filed on Oct 31, 1996, now abandoned, and claims under 35 U.S.C. §119(e)(1) the benefit of the filing date of U.S. provisional application Ser. No. 60/029,417, filed Oct. 31, 1996.

FIELD OF THE INVENTION

The invention relates to an integrated electronic circuit, and, more particularly to an integrated electronic circuit which can include RF, microwave, analog and digital systems and is of minimal size.

BACKGROUND

The emergence of new consumer markets in the personal communications field has driven manufacturers to develop smaller, lighter, more reliable, and cheaper products. These products generally combine RF, microwave, analog, and digital components to form a single unit such as a personal communications handset, for example a cellular phone handset. In a cellular phone handset there are RF circuits which include various passive and active components, such as (on the receive side) diplexer filter, low noise amplifiers, image reject filters, mixers, oscillators, IF amplifiers and various other components. On the RF transmit side, it includes power amplifiers and combiner circuits, in addition to the low frequency digital circuits. The required RF filters, especially the diplexer and image filters, are relatively expensive surface-mount components and consume valuable board surface area. Moreover, to form microwave integrated circuits has been a problem since such devices often require ground planes within which the device is formed.

Current practice is based on combining various RF, microwave, analog, and digital functional blocks (as discrete components) on a low cost flexible printed circuit board, generally of a plastic material. This board may have more than one layer but the buried layers are generally used only as DC or digital interconnects. No RF or microwave components are buried.

The need to reduce the size and weight of these units has led developers to look at low cost multi-layer integration schemes. Reliability, low cost, small size, light weight and performance are main issues in the development of such a technology.

SUMMARY OF THE INVENTION

An electronic integrated circuit includes a substrate of a conductive material having a surface and a body of a glass or ceramic dielectric material is on and bonded to the surface of the substrate. The dielectric body is formed of a plurality of layers of the dielectric material bonded together. A plurality of strips of a conductive material are on the surfaces of at least some of the layers of the dielectric body and form one or more of RF, microwave, analog and digital components and interconnects which are connected together to form a desired circuit.

BRIEF DESCRIPTION OF THE DRAWINGS

FIG. **1** is a sectional view of a portion of one form of an integrated electronic circuit in accordance with the present invention; and

FIG. **2** a sectional view of a portion of another form of an integrated electronic circuit in accordance with the present invention.

FIG. **3** is a sectional view of a form of a microwave integrated circuit in accordance with the present invention.

DETAILED DESCRIPTION

Referring initially to FIG. **1**, one form of an integrated electronic circuit in accordance with the invention is generally designated as **10**. Integrated circuit **10** comprises a substrate **12** of a plate of a conductive metal. On and bonded to a surface **14** of the substrate **12** is a body **13** of a dielectric material, such as a glass or ceramic. The body **13** is formed of a first relatively thick layer **16** of an inorganic dielectric material, such as a ceramic or glass. As will be explained, the dielectric layer **16** is made up of a plurality of thin layers **18** of the dielectric material which are bonded together. On a surface **20** of the dielectric layer **16** are a plurality of strips **22**, **24**, **26** and **28** of a conductive material, such as a metal. Each of the strips **22**, **24**, **26** and **28** is a thin layer of the metal coated on the surface **20** of the dielectric layer **16**. As will be explained, the metal strips **22**, **24**, **26** and **28** form at least a portion of an electronic component. Although four of the metal strips **22**, **24**, **26** and **28** are shown, there can be any desired number of the metal strips depending on the electronic components being formed.

On and bonded to the first dielectric layer **16** is a second relatively thick layer **30** of an inorganic dielectric material, such as a ceramic or glass. The second dielectric layer **30** is also formed of a plurality of thin layers **32** of the dielectric material which are bonded together. On a surface **34** of the second dielectric material **30** are a plurality of strips **36** and **38** of a conductive metal. The metal strips **36** and **38** are layers of the metal coated on the surface **34**. As will be explained, the metal strips **36** and **38** form at least a portion of electronic components. Although only two metal strips **36** and **38** are shown, there can be any number of the metal strips depending on the desired electronic components being formed.

A thin layer **40** of a dielectric material, such as a glass or ceramic, is on and bonded to the second dielectric layer **30**, and another thin layer **42** of a dielectric material is on and bonded to the thin dielectric layer **40**. A plurality of strips **44**, **46**, **48**, **50** and **52** of a conductive metal are on the surface of the thin dielectric layer **40**, and a plurality of metal strips **54**, **56**, **58** and **60** are on the surface of the thin dielectric layer **42**. Also on the surface of the thin dielectric layer **42** are various discrete components **62**, **64** and **66**, such as resistors, capacitors, transistors, etc. A plurality of conductive vias **68**, **70**, **72** and **74** extend through the dielectric layers to electrically interconnect the conductive strips on the various dielectric layers. For example, via **68** extends through the thin dielectric layers **42** and **40** and the second thick dielectric layer **30** to electrically connect the metal strip **54** on the thin dielectric layer **42** to the conductive strip **22** on the first dielectric layer **16**. Vias **70** and **72** extend through the thin dielectric layer **42** to connect metal strips on the thin dielectric layer **42** to metal strips on the thin dielectric layer **40**. Via **74** extends through all of the dielectric layers **42**, **40**, **30** and **16** to provide a connection to the substrate **12**.

In the integrated circuit **10**, the various metal strips form at least portions of various electronic components. For example, the strips **54**, **56**, **58** and **60** on the surface of the dielectric layer **42** can form RF interconnects, I/O ports and inductors. The metal strips **44**, **46**, **48**, **50** and **52** on the

surface of the dielectric layer **40** can form series capacitors, series or shunt resistors, cross-unders and interconnects. The metal strips **36** and **38** on the second dielectric layer **30** can form a microstrip ground plane, a stripline ground plane, or shunt capacitors. The metal strips **22**, **24**, **26** and **28** on the surface of the first dielectric layer **16** can form an RF filter center conductor, and the metal substrate **12** can form a second stripline ground plane. The various electronic components formed by the metal strips can be electrically connected together by the conductive vias which extend through the dielectric layers to contact the metal strips. Also, some of the metal strips can be patterned to form interconnects which connect the various electronic components. The discrete components **62**, **64** and **66** mounted on the dielectric layer **42** are also connected in the desired circuit by some of the metal strips.

As previously stated, the integrated circuit **10** may be provided with RF components, microwave components, analog components and digital components. For proper operation, the RF stripline filter must be formed in conjunction with the first and second dielectric layers **16** and **30**. This is so since the center conductor of the filter must be between two ground planes which are provided by the substrate **12** and a metal strip on the second dielectric layer **30**. Also, inductors must be formed on the surface of the thin dielectric layer **42** to keep it away from the ground planes and to decrease parasitic capacitance. Similarly, the position of other electronic components may be determined by their interrelation with other components so that one component does not interfere with any neighboring component.

The integrated circuit **10** is made using a plurality of thin tapes of green or unhardened ceramic or glass. The green tapes are formed by mixing particles of a glass in a liquid vehicle and a polymer binder. The mixture is spread on a surface of a metal base to form a layer of the mixture which is allowed to dry. This forms the green tape of the glass particles in the binder. To form the thick first and second dielectric layers **16** and **30**, a plurality of the green tapes are placed in stacked relation to the desired thickness. The thin layers **40** and **42** are each a single strip of the green tape. The green tapes are then coated with metal layers to form the various metal strips. The green tapes with the metal strips thereon are then stacked in proper order on the surface **14** of the metal substrate **12** and fired at a temperature at which the binder is driven off and the glass particles melt. When cooled, the melted glass fuses together to form the various layers and to bond the layers together and to the substrate **12** to form the body **13** secured to the substrate **12**. By firing the green tapes at the proper temperature, the glass particles may be devitrified to form layers of a ceramic material. Prior to firing the green tapes, holes may be formed therein where the vias are to be provided. The holes may be filled with a conductive material either before firing the green tapes or after the tapes are fired and formed into the body **13**.

Referring to FIG. **2**, another form of the integrated electronic circuit which incorporates the invention is generally designated as **100**. Integrated circuit **100** comprises a substrate **112** of a conductive metal having a surface **114**. On and bonded to a portion of the surface **114** of the substrate **112** is a first body **113** of a dielectric material, such as glass or ceramic. The first body **113** if formed of a first thick layer **116** of a dielectric material made up of a plurality of thin layers **118**. On the surface **120** of the first dielectric layer **116** are a plurality of metal strips **122**, **124**, **126** and **128**. A second thick layer **130** of a dielectric material is on and bonded to the surface **120** of the first dielectric layer **130**. The second dielectric layer **130** is also formed of a plurality of thin layer **132** of the dielectric material. On the surface **134** of the second dielectric layer **132** is at least one strip **136** of a conductive metal. A pair of thin layers **140** and **142** of a dielectric material are stacked on and bonded to the surface **134** of the second dielectric layer **130**. A plurality of strips **144**, **146**, **148**, and **150** of a conductive metal are on the dielectric layer **140** and a plurality of strips **154**, **156**, **158** and **160** are on the dielectric layer **142**. A plurality of discrete components **162**, **164** and **166**, such as resistors, capacitors, transistors, etc. are on the dielectric layer **142** and are electrically connected to some of the metal strips. Vias **168**, **170**, **172** and **174** of a conductive metal extend through the various dielectric layers to electrically connect the metal strips to form a desired circuit.

A second body **176** of a dielectric material is on and bonded to the portion of the surface **114** of the substrate **112** adjacent the first body **113**. The second body **176** is formed of a plurality of layers **178** of the dielectric material which are stacked to a thickness substantially equal to the total thickness of the first body **113**. On the surface of the second body **176** are strips **180** of a conductive metal. A thin layer **182** of a dielectric material is on the surface of the second body **176** and covers the metal strips **180**. A via **184** of a conductive metal extends between the second body **176** and the first body **113**.

In the integrated electronic circuit **100**, like in the integrated electronic circuit **10** shown in FIG. **1**, the various metal strips form at least portions of various electronic components and interconnects. The electronic components are electrically connected together and to the discrete components on the dielectric layer **142** by the vias and the interconnects to form a desired electronic circuit. The electronic circuit can include RF, microwave, analog and digital components. In the integrated electronic circuit **100**, an RF component, such as a diplexer filter, can be formed in the second body **176**. This has the advantage that the diplexer filter, which is generally required to be of minimum RF loss, is realized in a microstrip rather than stripline form. This allows the filter to perform better and results in a thinner and lighter circuit. The integrated electronic circuit **100** is made in the same manner as described above with regard to the integrated electronic circuit **10**.

Referring to FIG. **3**, a microwave integrated circuit in accordance with an embodiment of the invention is generally designated as **310**. Microwave integrated circuit **310** comprises a substrate **312** of a plate of a conductive metal. Mounted on and secured to a surface **314** of the substrate **312** is a body **316** of a dielectric material, such as a ceramic or glass. The body **316** is formed of two layers **318** and **320** bonded together. The body **316** has an opening **322** therethrough to the substrate **312**. Between the layers **318** and **320** at one side of the opening **322** is a layer **324** of a conductive metal which is coated on the surface of the layer **318**. Also between the layers **318** and **320** at the other side of the opening **322** is a narrow layer **326** of a conductive metal which is also coated on the surface of the layer **318**. On the layer **320** and directly over the metal layer **326** is a narrow layer **328** of a conductive metal.

A cover **330** extends over and is mounted on the body **316** and extends over the opening **322**. The cover **330** is formed of a plurality of layers **332**, **334** and **336** of a dielectric material, such as a glass or ceramic, which are bonded together. A strip **338** of a conductive material, such as a metal, is between the middle layer **334** and the top layer **336** along one edge of the cover **330**. A strip **340** of a conductive material is on the top layer **336** and extends over the metal strip **338**. The layers **332**, **334** and **336** may have thereon

patterns of a conductive material forming interconnects (not shown). A via **341** of a conductive material extends through the layers **336**, **334** and **332** to electrically connect an interconnect pattern on the top layer **336** to the interconnect pattern on the bottom layer **332**. A via **342** of a conductive material extends through the top and middle layers **336** and **334** to electrically connect an interconnect pattern on the top layer **336** to an interconnect pattern on the middle layer **334**. Other vias may be provided to connect the various interconnect patterns on the layers **332**, **334** and **336**.

A discrete semiconductor component **344**, such as a discrete microwave component, is mounted in the opening **322** in the body **316** on the substrate **312**. The discrete component **344** is electrically connected to the various conductive patterns on the layers of the body **316** to electrically connect the component **344** to other electrically devices on the body **312**. Other discrete components **346**, **348** and **350** are mounted on the top layer **336** of the cover **330** and are electrically connected together and to other components in the integrated circuit **310** by the interconnects and the vias to form an integrated circuit. As shown, an antenna **352** is mounted on the top of the body **316** at one end of the cover **330**, and a battery **354** is mounted on the substrate **312** adjacent another end of the body **312**.

In the microwave integrated circuit **310**, the conducting strips **326**, **328**, **338** and **340** form various types of microwave components, such as delay lines, filters, capacitors, etc. These devices are electrically connected to each other and to the discrete components **344**, **346**, **348** and **350** through the interconnect patterns and the vias **341** and **342** to form a desired microwave integrated circuit. The conductive substrate **312** serves as a ground plane for the integrated circuit. The antenna **352** and the battery **354** are also electrically connected to the integrated circuit through the interconnect patterns. Although only a few types of electrical components are shown, any well known type of electrical component can be formed on the layers of the body **316** or the cover **330** or provided by the discrete components mounted in or on the body **316** and the cover **330**. Also, other ground planes may be provided by conductive layers on the various layers of the body **316** or cover **330**.

The body **316** and the cover **330** may each be formed by first mixing particles of the dielectric material, such as a glass or ceramic, in a vehicle, such as a plastic. The mixture is spread out on a surface to form a layer of a desired size, shape and thickness. The layers are dried to form a green tape of the dielectric material. The various conductive strips and patterns are then coated on the surfaces of the layers of green tape. The layers which are to form the body **316** are cut to form the opening **322**. The layers of green tape having the conductive strips and patterns thereon are stacked to form the body **316** and the cover **330**. The layers forming the body **316** are stacked on a metal substrate. The stack of green tapes are then fired to melt the particles of the dielectric material and bond the particles together. When cooled, this forms the solid body **316** and cover **330**. The cover **330** may be placed over the body **316** and secured thereto with a suitable bonding material.

Thus, there is provided by the invention an integrated electronic circuit which can include RF, microwave, analog and digital components so as to permit the forming of various circuits, particularly those used in the communications field. The integrated electronic circuit of the invention is ideal for use in a variety of electronic systems. The integrated electronic circuit of the invention is well suited for use in communications handsets and base stations, and more particularly wireless communications handsets and base stations, where small size is desired or required. The invention may be used in general with RF receivers and transmitters, including RADAR systems. By allowing the combination of RF and digital components in the package, the invention proves useful in PCMCIA modules and the like. The invention allows for miniaturization of many systems, including digital systems, and thus will find use in the field of computers and digital processing devices. In microwave applications, the invention allows the various microwave components to be located close to the ground plane formed by the substrate or by conductive layers on the body or cover.

The components are formed in and on a body of a glass or ceramic with at least some of the components being buried in the body. This provides a more compact and sturdy device which can be made easily and inexpensively. Although the forms of the integrated electronic circuit shown and described have about four layers of the dielectric material, the integrated electronic circuit can be made of any number of the layers which are required to form the desired circuit. Also, the thickness of the layers can be varied as required and the number and size of conductive strips on the layers can be varied according to the particular circuit being formed.

What is claimed is:

1. An electronic integrated circuit comprising:

a supporting substrate of a conductive material having first and second opposed surfaces;

a body of a dielectric material on and bonded to only the first surface of the substrate, said body including a first thick layer of the dielectric material on the first surface of the substrate, at least one strip of a conductive material only on the surface of the first thick layer, a second thick layer of the dielectric material on the first thick layer, a strip of a conductive material only on the second thick dielectric layer, and additional layers of the dielectric material on the second thick dielectric layer said layers being in stacked relation and bonded together; and

a plurality of strips of a conductive material on the surfaces of at least some of the additional layers of the body, the conductive strip on the first thick dielectric layer forming a filter wherein the conductive strip on the second thick dielectric layer and the substrate are the ground planes of the filter, and other of said conductive strips forming at least one of an RF components, microwave component, analog component, digital component and interconnect which are connected together to form a desired circuit.

2. The circuit of claim **1** further comprising at least one discrete component electrically connected in the circuit.

3. The circuit of claim **2** in which the body has an opening therethrough to the first surface of the substrate and the discrete component is mounted on the first surface of the substrate within the opening in the body.

4. The circuit of claim **3** including a cover of a dielectric material mounted on and secured to said body and extending over the opening in the body, said cover being formed of a plurality of layers of the dielectric material bonded together wherein layers of a conductive material are on the surfaces of the layers of the cover forming microwave devices and interconnect patterns.

5. The circuit of claim **1**, further comprising vias of a conductive material extending through the various layers of the body to electrically connect the conductive strips on the various layers.

6. The circuit of claim **1** in which each of the first and second thick dielectric layers is formed of a plurality of thin layers of the dielectric material bonded together.

7. An electronic integrated circuit comprising:

a supporting substrate of a conductive material having first and second opposed surfaces;

a body of a dielectric material on and bonded to only a portion of the first surface of the substrate, said body including a plurality of layers of the dielectric material in stacked relation and bonded together;

a second body of the dielectric material on and bonded to another portion of the first surface of the substrate spaced from the first body; and

strips of a conductive material on the second body forming a filter, and a plurality of strips of a conductive material on the surfaces of at least some of the layers of the first body, said conductive strips forming at least one of an RF component, microwave component, analog component, digital component and interconnect which are connected to form a desired circuit.

8. The circuit of claim 7 further comprising a via of a conductive material extending between the first said dielectric body and the second dielectric body to serve as a shield.

9. The circuit of claim 8 further comprising a layer of a dielectric material on the second dielectric body and over the conductive strips on the second dielectric body.

* * * * *