(No Model.) 2 Sheets—Sheet 1.

J. E. SCHUMACHER.

HYDRAULIC OR OTHER ENGINE.

No. 571,129. Patented Nov. 10, 1896.

Fig. 1.

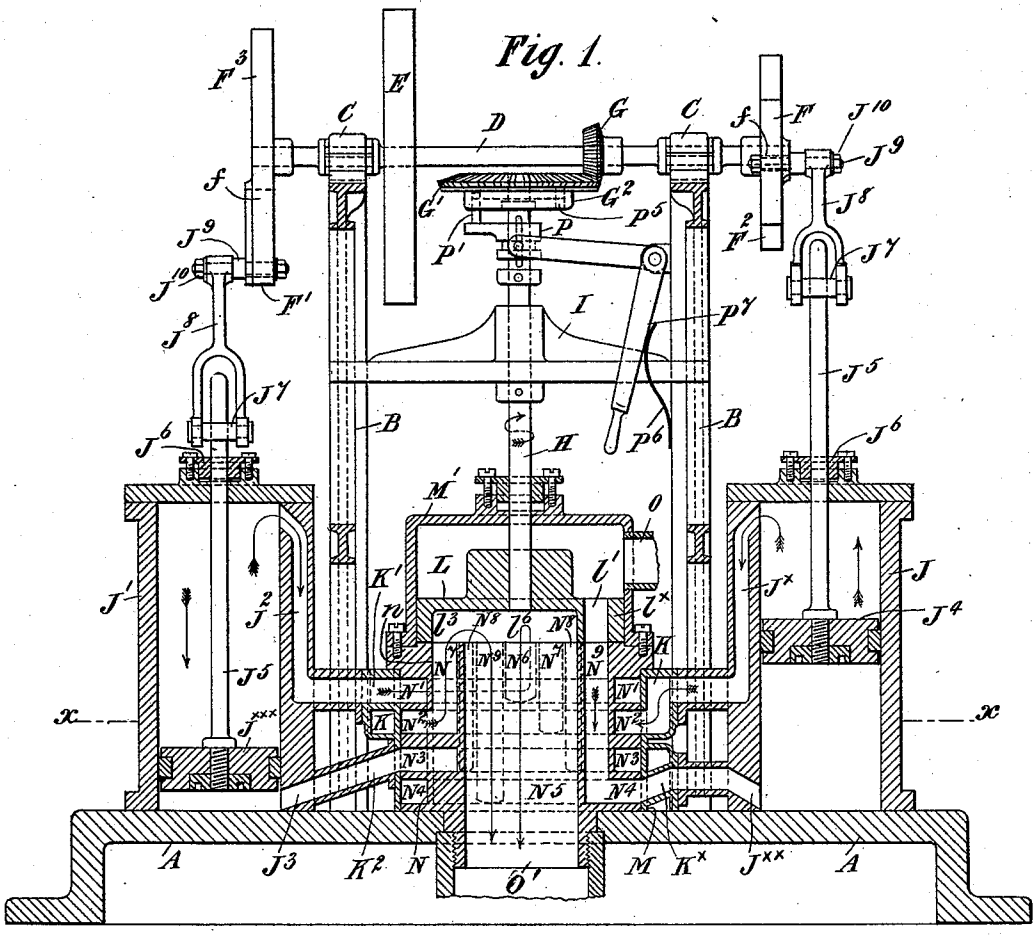

Fig. 3.

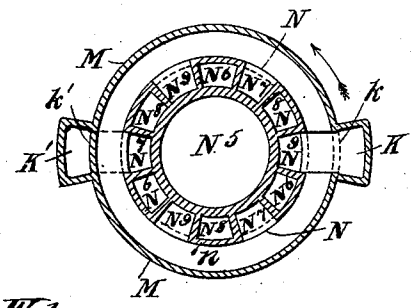

Fig. 6.

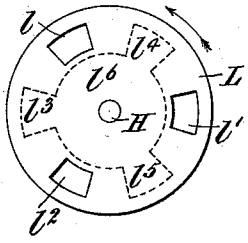

Fig. 7.

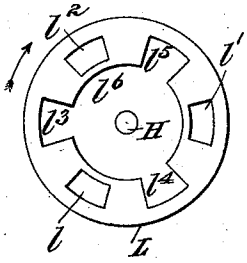

Witnesses:
J. B. McGirr.
G. L. Dyer

Inventor.
J. E. Schumacher
By Howard H. Dyer. Atty.

(No Model.) 2 Sheets—Sheet 2.

J. E. SCHUMACHER.

HYDRAULIC OR OTHER ENGINE.

No. 571,129. Patented Nov. 10, 1896.

Fig. 9.

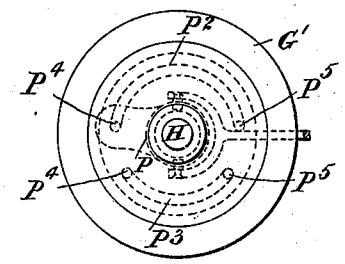

Fig. 2.

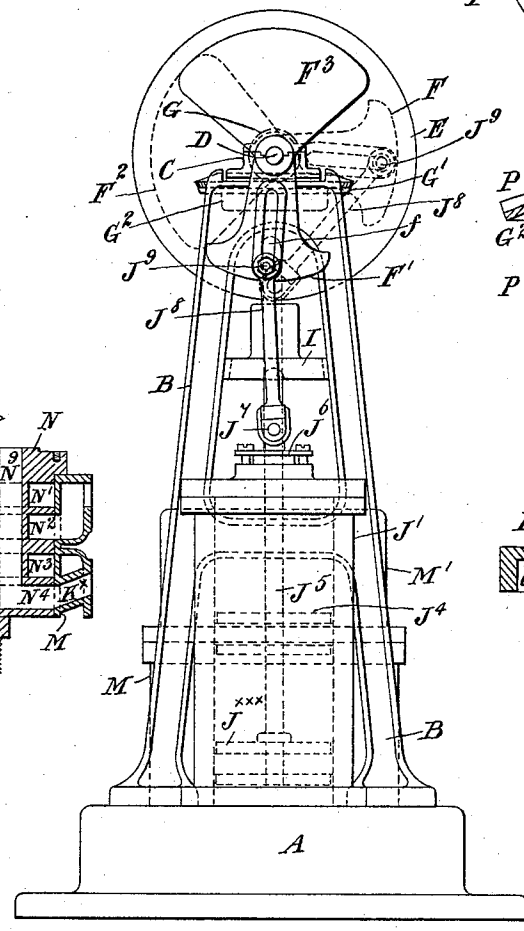

Fig. 8.

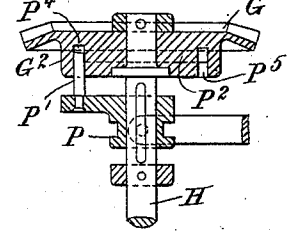

Fig. 4.

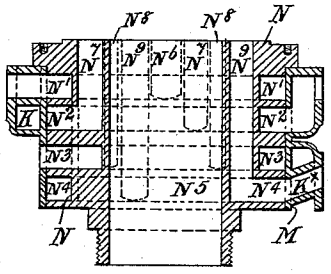

Fig. 5.

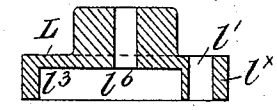

Witnesses:

J. B. McGirr.

Frank L. Dyer

Inventor.

J. E. Schumacher.

By Leonard H. Dyer Atty.

UNITED STATES PATENT OFFICE.

JAMES EDWARD SCHUMACHER, OF YORK, ENGLAND.

HYDRAULIC OR OTHER ENGINE.

SPECIFICATION forming part of Letters Patent No. 571,129, dated November 10, 1896.

Application filed September 24, 1894. Serial No. 524,010. (No model.)

To all whom it may concern:

Be it known that I, JAMES EDWARD SCHUMACHER, a subject of the King of Prussia, Emperor of Germany, residing in the city and county of York, England, have invented new and useful Improvements in or Relating to Hydraulic or other Engines, of which the following is a specification.

This invention relates to improvements in hydraulic and other engines; and the objects of my improvements are, first, to provide a continuous revolving valve making, say, one revolution to three strokes of the piston or pistons; second, to afford facilities for the proper adjustment of the stroke of each piston, whereby when, say, two cylinders and pistons are controlled by the same valve the stroke may, if desired, be slightly varied; third, to enable the engine to be readily reversed. I attain these objects by the mechanism illustrated in the accompanying drawings, in which—

Figure 1 is a sectional elevation of a vertical engine provided with two cylinders controlled by one valve; Fig. 2, a front elevation of the same; Fig. 3, a sectional plan of the valve-seat on line *x x*, Fig. 1. Fig. 4 is a sectional elevation of the valve-seat; Fig. 5, a sectional elevation of the valve. Figs. 6 and 7 are plans of the top and bottom faces of the valve. Figs. 8 and 9 are respectively a sectional elevation and end elevation of reversing-gear.

Like parts in all the views are marked with similar letters of reference.

A is the bed-plate, and B are the standards. These constitute the framework of the engine and may be of any suitable and ordinary construction. On the top of the standards B are fixed the pedestals C, which form the bearings of the fly-wheel shaft D, on which is mounted the fly-wheel E, slotted cranks F F′, weighted at F^2 F^3, to be hereinafter described, and bevel-pinion G, gearing with bevel-wheel G′, mounted on the valve-shaft H, which is supported by bearings I, fixed to the standards B.

All the above parts, with the exception of the cranks F F′, may be of ordinary and well-known construction.

On the bed-plate A are bolted or otherwise fixed one or more double-acting cylinders J J′, somewhat similar in construction to that of a steam-cylinder. The top of the bed-plate A is preferably, though not necessarily, so arranged to form the bottom cover for each of the cylinders. In each cylinder are provided two ports $J^{\times}$ $J^{\times\times}$ or J^2 J^3, communicating, respectively, with the ends of each of their cylinders and connected by suitable pipes or passages K K′ $K^{\times}$ K^2 with a valve-box M, to be hereinafter described. In each of the cylinders J J′ reciprocates a piston J^4 $J^{\times\times\times}$ of ordinary construction, mounted on a piston-rod J^5, working through the gland J^6 and connected to the weighted slotted cranks F F′ by cross-heads J^7, forked or other rods J^8, and pins J^9, capable of adjustment in the slots *f* of the cranks. According to the position of the crank-pins J^9 in the slots *f* will the stroke of the pistons J^4 $J^{\times\times\times}$ be increased or diminished. The crank-pins are retained in position in the said slots by nuts J^{10} or their equivalents.

The circular valve L, mounted on shaft H, and its case M, fixed to the bed-plate A, are constructed as follows: Within a metal casing or ring, hereinafter termed the "outer" casing M, is inclosed a tube or ring N, hereinafter termed the "valve-seat," of any suitable diameter, length, and thickness. In the periphery of the valve-seat N are cut or otherwise formed any desired number of circumferential grooves or recesses, say, for example, four, N′ N^2 N^3 N^4; but I distinctly wish it to be understood that I do not limit myself to this or any other number hereinafter mentioned. In the thickness or ring portion *n* of the said valve-seat N and around its central orifice N^5 are also provided a number of vertical holes or apertures, hereinafter termed "valve-ports," communicating with the said circumferential grooves, say, for example, three ports to each circumferential groove. That is to say, valve-ports N^6 communicate with circumferential groove N′ and port J^2 of cylinder J′; valve-ports N^7 with circumferential groove N^2 and port $J^{\times}$ of cylinder J; valve-ports N^8 with circumferential groove N^3 and port J^3 of cylinder J′; valve-ports N^9 with circumferential groove N^4 and port $J^{\times\times}$ of cylinder J. The whole of the valve-ports N^6 N^7 N^8 N^9 are arranged at or about a right angle to the circumferential grooves N′ N^2 N^3 N^4 and

are open to the action of the valve L. The outer casing M is fixed around the periphery of the valve-seat N, so as to be water or fluid tight, for preventing the water or other fluid passing from one circumferential groove to another. In the periphery of the outer casing are provided a number of openings $k\,k'$, corresponding with the number of circumferential grooves, that is to say, one opening for each groove, which is connected by a pipe or passage with one of the ports in each cylinder as follows: passages $K\,K^{\times}$, respectively, with circumferential grooves $N^2\,N^4$ and ports $J^{\times}\,J^{\times\times}$; passages $K'\,K^2$, respectively, with circumferential grooves $N'\,N^3$ and ports $J^2\,J^3$. On the top of these valve-ports $N^6\,N^7\,N^8\,N^9$ is arranged to rotate within the outer casing M a circular disk or valve proper, L, in which are provided a number of vertical openings or orifices corresponding in number with the number of ports communicating with each circumferential groove. That is to say, if there are three valve-ports, as shown in the drawings, communicating with each circumferential groove, then there will be three vertical openings $l\,l'\,l^2$, arranged to perforate the flange or disk portion $l^{\times}$ of the valve L. These openings or orifices $l\,l'\,l^2$ are of slightly larger area than that of the valve-ports $N^6\,N^7\,N^8\,N^9$. On the inner face of the disk or flange $l^{\times}$ are also formed or provided a number of apertures or recesses $l^3\,l^4\,l^5$, (of the same number as the ports communicating with each circumferential groove,) arranged to communicate with a central circular or other recess l^6, formed in the under face of the said disk or flange $l^{\times}$ and about the same (or nearly so) diameter, and immediately over the central orifice N^5 of the valve-seat.

It will be readily understood if, say, two cylinders, such as J J′, each having a port, such as $J^{\times}\,J^{\times\times}\,J^2\,J^3$, communicating with each end of the cylinder, are connected with the circular valve-disk, such as L, and its casing, such as M, four circumferential grooves would preferably be provided in the outer casing M, and, say, twelve ports, such as $N^6\,N^7\,N^8\,N^9$, would be provided in the valve-seat N and the four perforations, such as $k\,k'$, in the outer casing M would be connected, respectively, by four pipes, such as $K\,K^{\times}\,K'\,K^2$, with the four ports, such as $J^{\times}\,J^{\times\times}\,J^2\,J^3$, in the cylinders, one pipe for each port.

The herein-described ports $J^{\times}\,J^{\times\times}\,J^2\,J^3$ in the cylinders J J′ and valve-ports $N^6\,N^7\,N^8\,N^9$ are alternately employed for inlet and exhaust purposes. The inlet water or fluid may be arranged to enter the hood or valve-covering M′, which forms a part of the outer case M at O, above the circular valve-disk L, and passes through the vertical holes or apertures $l\,l'\,l^2$ therein to the valve-ports and circumferential grooves in the valve-seats, and from thence to the ports in the cylinder, that is to say, when the valve L is in the position shown in the drawings the inlet-water passes into the hood M′, through openings l', into valve-ports N^9, thence into circumferential groove N^4, passage $K^{\times}$, port $J^{\times\times}$, to bottom of cylinder J for raising piston J^4 to the top of its stroke, while the exhaust is forced by the descent of piston $J^{\times\times\times}$ from the cylinder J′ into the circumferential groove N^3 and up the valve-ports N^7 into the recesses $l^3\,l^4\,l^5$ and central circular recess l^6, formed in the inner face of the circular valve-disk, by which it is directed to the central orifice N^5 in the valve-seat for conveyance away by a pipe O′ or its equivalent.

The circular valve is caused to rotate continuously by gearing mounted, say, on the shafts D and H or other equivalent means for gradually opening and closing the valve-ports; but the rotation of the circular valve L is slower than the traverse of the pistons, that is to say, the pistons $J^4\,J^{\times\times\times}$ may be arranged to make, say, three strokes to one revolution of the valve.

To reverse the action of the valve and of the engine, one of the gear-wheels, say wheel G′, is arranged to revolve loosely on its shaft H, and on the same shaft is mounted, so as to slide freely on a square portion or key, a clutch P, armed with one or more pins P′. In the boss G^2 or other portion of the gear-wheel is or are provided one or more grooves, say two grooves $P^2\,P^3$, of the same or varying lengths, as shown in the drawings. At the ends of each groove is a hole P^4 and P^5, into which the pin P′, or one of the pins when more than one pin is employed, enters when the clutch is meshed with the gear-wheel. During the time the pin is traveling in the groove P^2 or P^3 of the wheel no motion is transmitted to the circular valve. A suitable spring P^6 and lever P^7 or equivalent mechanism may be employed for meshing and unmeshing the clutch.

To reverse the engine, the pin P′ is withdrawn from the hole, say P^4, and the action of the engine is immediately stopped. On rotating the pin to place it in the hole P^5 the position of the valve over the ports will be changed and thus causing a reversing action to take place.

It will be readily understood that when required the cylinders, valves, and valve-seat may be arranged in a horizontal position; also that instead of arranging the valve to work in the horizontal position, as shown in the drawings, it may be arranged to work in a vertical position, that is, with its shaft or spindle H in a horizontal instead of the vertical position illustrated.

One or more cylinders may be operated from one valve and its seats, two circumferential grooves and any desired number of valve-ports—say three for each groove—being required for each cylinder.

The above-described engine may be operated by gas, compressed air, steam, water, and other fluid, preferably water, and may be applied for a great variety of purposes.

The action of the engine is as follows: Com-

mencing with the admission of water to cylinder J to raise piston J^4 to, say, its half-upstroke, water or other fluid under pressure enters the hood M′, through the pipe O, above the valve L, from any suitable source—such as, say, the water mains or reservoir—and passes through the openings $l\ l'\ l^2$ to the valve-ports—say to the three valve-ports $N^9\ N^9\ N^9$—to circumferential groove N^4, and from thence through passage $K^\times$ for imparting the full power or pressure to piston J^4 for its upstroke. At the same time port $J^\times$, passage K, circumferential groove N^2 and valve-ports N^7, and covered recesses $l^3\ l^4\ l^5\ l^6$ will be in communication with the central orifice N^5 for conveying away the exhaust from cylinder J. At the commencement of the action in cylinder J, that is, when the piston is in the position shown in Fig. 1, the valve-ports N^6 and N^8 are closed by the solid or faced portions of the under side of flange $l^\times$ of the valve L against the admission of water to the cylinder J′. At the commencement of the action in cylinder J′ the exhaust from below the piston will have passed out through port J^3, passage K^2, to circumferential groove N^3, valve-port N^8, recessed portions $l^3\ l^4\ l^5\ l^6$, to central orifice N^5, it being understood that the valve would not have reached the position illustrated until the piston $J^{\times\times\times}$ had reached the bottom of its cylinder. When, say, the half-upstroke of the piston J^4 in cylinder J is reached, and continuing to admit the water to said cylinder J through openings $l\ l'\ l^2$, valve-ports N^9, and circumferential groove N^4, none of the valve-ports will then be practically closed, as valve-ports N^7 will be then partially and decreasingly closed to the exhaust from cylinder J, while the valve-ports N^6 will be partially and increasingly opened to the exhaust from cylinder J′. When this stage is reached that both of the pistons J^4 and $J^{\times\times\times}$ are rising in their respective cylinders, it will be readily understood that the admission of water through the openings $l\ l'\ l^2$ of the rotating valve L to valve-ports N^9 and circumferential grooves N^4 will gradually decrease, while the admission to valve-ports N^8 and circumferential groove N^3 will be simultaneously and correspondingly increased. On the completion of the stroke of piston J^4 in the upper half of the piston J and when the piston $J^{\times\times\times}$ is, say, at its half-stroke in cylinder J′ valve-ports N^7 and N^9 are closed, and the valve-ports N^8 communicating with circumferential groove N^3 are fully opened to cylinder J′, and at the same time valve-ports N^6, communicating with circumferential groove N′, are fully opened to the exhaust from that cylinder; but when the piston $J^{\times\times\times}$ has passed over, say, its half-stroke and is continuing its motion upward at the same time piston J^4 is descending, say, to its half-stroke valve-ports N^8 will be closing decreasingly to pressure at the same time that valve-ports N^6 are being closed decreasingly to the exhaust from cylinder J′. Simultaneously therewith valve-ports N^7 will increasingly open to pressure, and N^9 will also be increasingly opened to the exhaust from cylinder J. On the completion of the stroke of the piston $J^{\times\times\times}$ and when the piston J^4 is at, say, its half-downstroke in cylinder J valve-ports N^6 and N^8 will be closed, thereby completely shutting off the pressure and exhaust to and from cylinder J′. At the same time valve-ports N^7 and N^9 will be fully opened for respectively imparting pressure to the piston J^4 and receiving the exhaust from cylinder J; but by the continued descent of the piston J^4, say, from its half-stroke to the bottom of cylinder J, valve-ports N^6 will be increasingly opened for admitting pressure to the top of cylinder J′, and valve-ports N^8 will open increasingly for receiving the exhaust from the cylinder J′. Simultaneously therewith valve-ports N^7 will be closed decreasingly to pressure in cylinder J and valve-ports N^9 closed decreasingly to the exhaust from the same cylinder.

By the continuous rotation of the valve, before comparatively any pressure is obtained in the closed valve-ports which would tend to lift or force the valve from its seat, the valve will have been moved partially over the adjoining valve-ports, say, for instance, N^6 and N^8, gradually opening them and closing the previously-opened ones, so that when the openings $l\ l'\ l^2$ and recesses $l^3\ l^4\ l^5$ are respectively midway between two sets of valve-ports, say, for example, between $N^9\ N^6$ and $N^7\ N^8$, water or other fluid for completing the upward stroke of piston J^4 and downward stroke of piston $J^{\times\times\times}$ would be able to pass simultaneously through openings $l\ l'\ l^2$ to valve-ports $N^9\ N^6$. At the same time the water above piston J^4 and below piston $J^{\times\times\times}$ will respectively be forced, say, through ports $J^\times\ J^3$ of cylinders J J′, along passages, say, K K^2, up valve-ports, say, $N^7\ N^8$, and conveyed by recesses $l^3\ l^4\ l^5$ to central recess l^6 and thence down exhaust N^5 and away through pipe O′.

It will thus be seen that on water or other fluid pressure being admitted to the hood M′ above the valve L it will find, as described, three supply valve-ports fully open to pressure and which communicate with the ports in the cylinder J, (while the valve-ports of cylinder J′ are closed,) whereby the piston J^4 is caused to reciprocate in its cylinder, and in so doing and by the connection of the pistons with the shaft D, by means of piston-rods J^5, cross-heads J^7, connecting-rods J^8, crank-pins J^9, and cranks F F′, a rotary motion is imparted to the said shaft and by it transmitted through gear-wheels G G′, boss G^2, clutch P, sliding on valve shaft or spindle H, to valve L, causing it to rotate and thus changing the position of the valve for operating both pistons simultaneously, as described, thereby permitting of another set of three valve-ports being opened to the exhaust. By the gradual simultaneous opening and clos-

ing of the inlet and exhaust valve-ports an easy and uniform motion is imparted to the moving parts of the engine.

Having now particularly described the nature of my invention, what I claim, and desire to be secured by Letters Patent, is—

1. In an engine, the combination with a bed-plate, cylinders mounted on said bed-plate, a valve-case arranged adjacent to said cylinders, and communicating therewith, a valve-seat within the casing, circumferential grooves formed on the valve-seat, each groove communicating with a single port of one cylinder, and with one or more openings in the face of the valve-seat, a hood covering the face of the valve-seat a rotating valve mounted within the hood, perforations within the valve connecting the hood and circumferential grooves, and recesses on the face of the valve, connecting the grooves with the central orifice, substantially as set forth.

2. In an engine such as described the combination of the outer casing M perforated as described, the valve-seat N fitted within said outer casing having a number of circumfertial grooves N' N^2 N^3 N^4 cut in its periphery, valve-ports N^6 N^7 N^8 N^9 communicating with said circumferential grooves as described, an orifice N^5 in the center of said valve-seat, a valve L working in the hood M' and upon the valve-seat N, and having a number of openings l' l^2 l^3 for inlet purposes, and recesses l^3 l^4 l^5 communicating with a central circular recess l^6 over the central orifice N^5 for exhaust, said valve receiving a continuous rotary motion through gear-wheels G, G', and shaft H from the fly-wheel shaft D as set forth.

In testimony whereof I have hereunto signed my name to this specification in presence of two subscribing witnesses.

JAMES EDWARD SCHUMACHER.

Witnesses:

ELIZABETH SCHUMACHER,

W. FAIRBURN HART.