(No Model.) 4 Sheets—Sheet 1.

A. G. PAUL.

MEANS FOR LIFTING AND TRANSFERRING LIQUIDS, &c.

No. 563,878. Patented July 14, 1896.

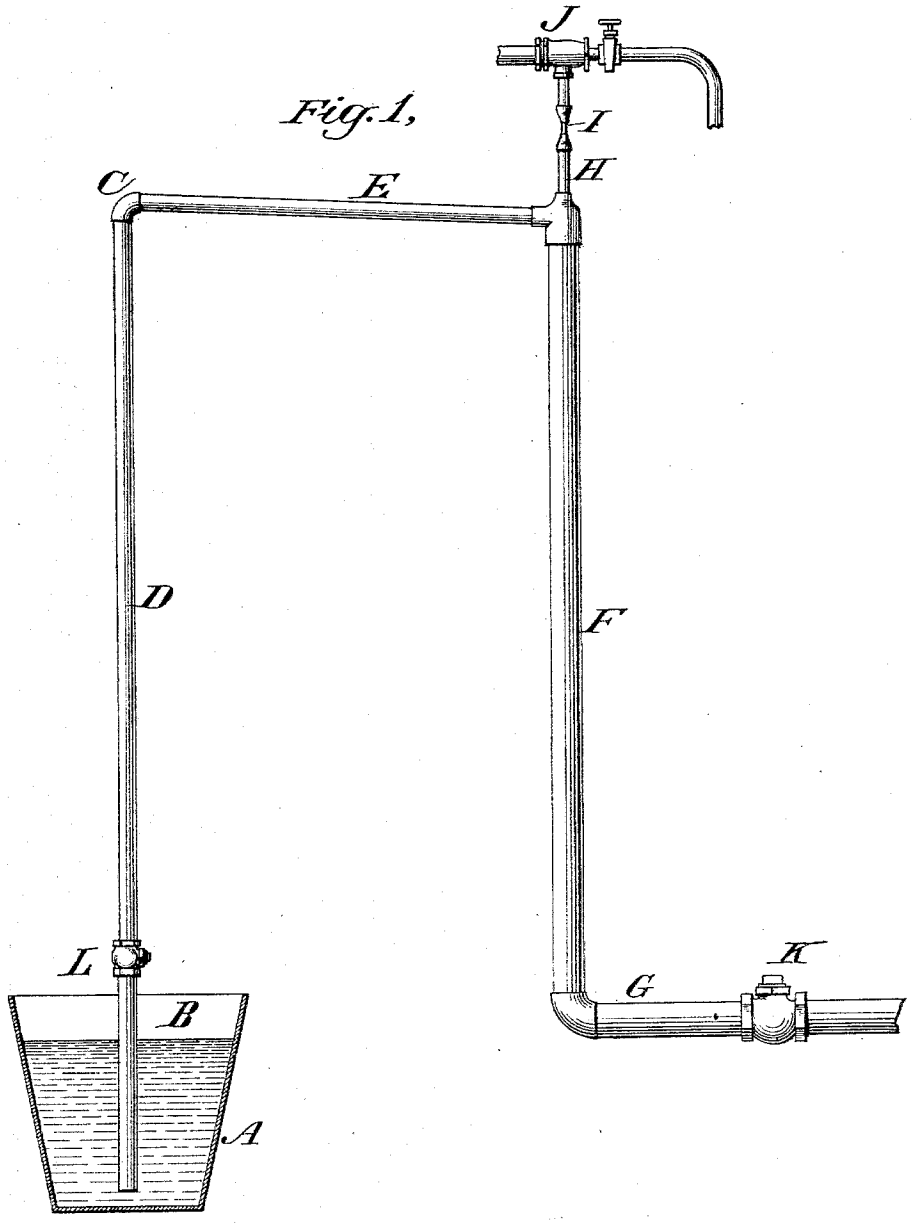


Witnesses:-
Nicholas M. Goodlett Jr
Asher Mayer

Inventor:-
Andrew G. Paul,
By his Attorneys,
Witter & Kenyon.

(No Model.) 4 Sheets—Sheet 2.

A. G. PAUL.

MEANS FOR LIFTING AND TRANSFERRING LIQUIDS, &c.

No. 563,878. Patented July 14, 1896.

Fig. 2.

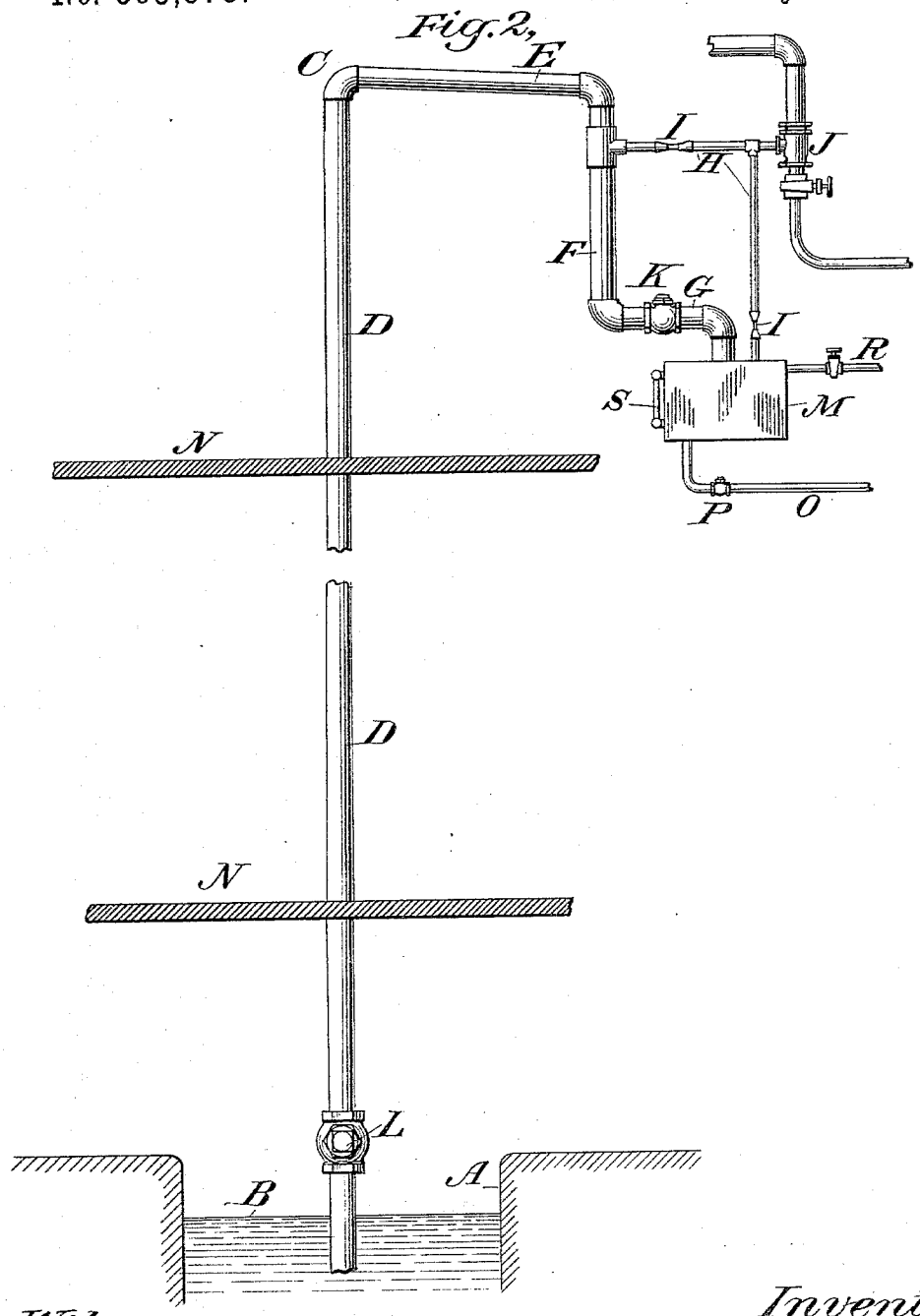


Witnesses:-
Nicholas H. Goodlett Jr.
Asher Mayer

Inventor:-
Andrew G. Paul,
By his Attorneys,
Witter & Kenyon

(No Model.) 4 Sheets—Sheet 3.

A. G. PAUL.

MEANS FOR LIFTING AND TRANSFERRING LIQUIDS, &c.

No. 563,878. Patented July 14, 1896.

Fig. 3,

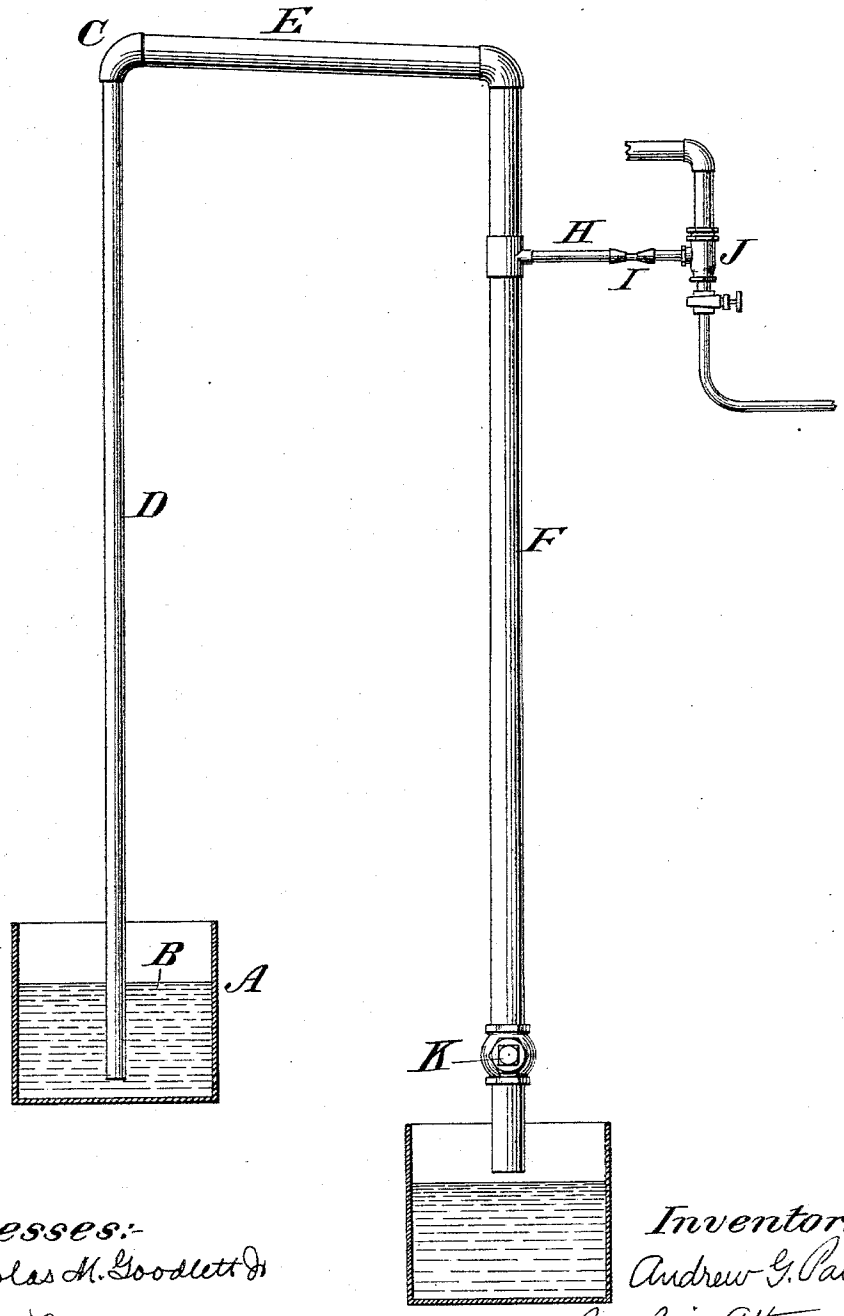


Witnesses:-
Nicholas H. Goodlett Jr
Asher Mayer

Inventor:-
Andrew G. Paul
By his Attorneys,
Witter & Kenyon.

(No Model.) 4 Sheets—Sheet 4.

A. G. PAUL.

MEANS FOR LIFTING AND TRANSFERRING LIQUIDS, &c.

No. 563,878. Patented July 14, 1896.

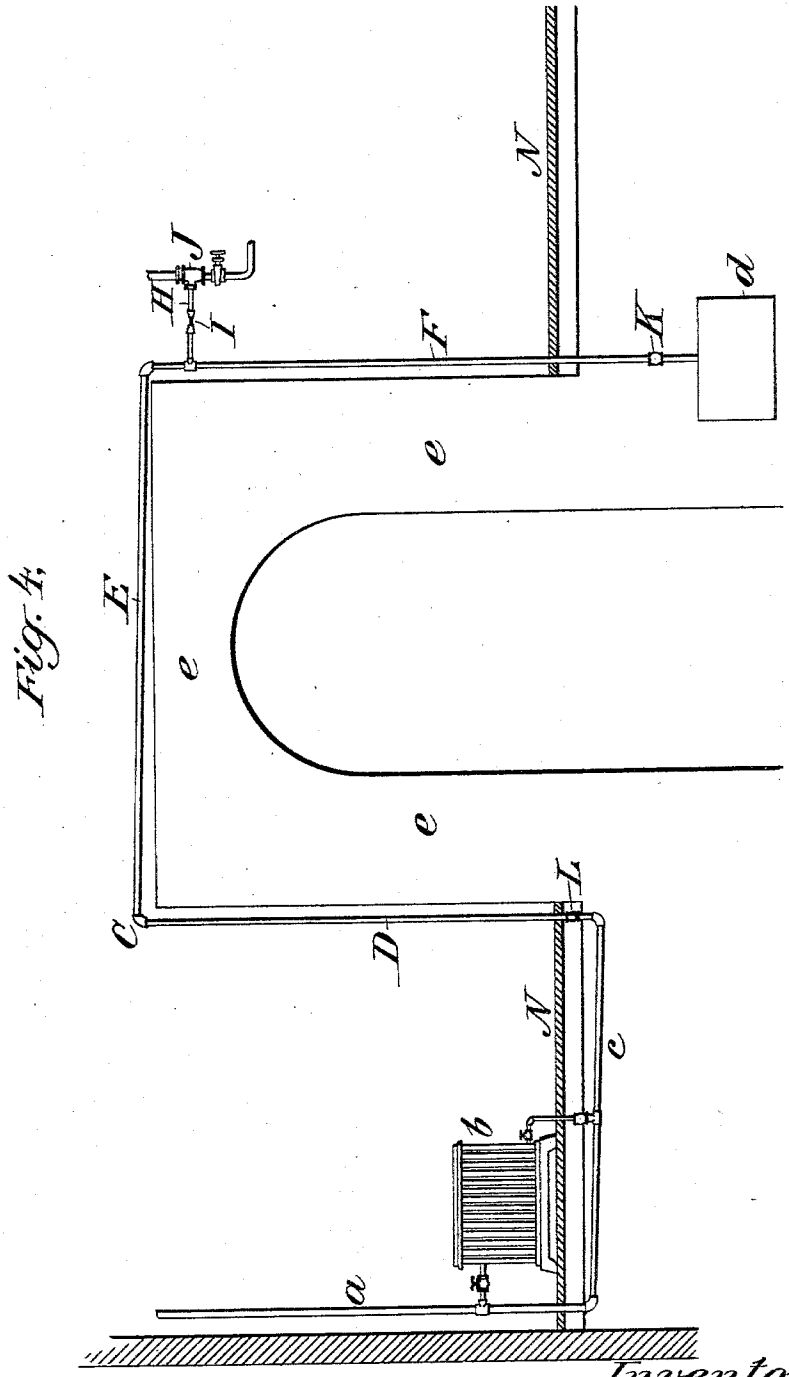


Witnesses:-
Nicholas M. Goodlett Jr
Asher May Jr

Inventor:-
Andrew G. Paul
By his Attorneys
Witter & Kenyon

# UNITED STATES PATENT OFFICE.

ANDREW G. PAUL, OF BOSTON, MASSACHUSETTS, ASSIGNOR TO THE PAUL STEAM SYSTEM COMPANY, OF MAINE.

## MEANS FOR LIFTING AND TRANSFERRING LIQUIDS, &c.

SPECIFICATION forming part of Letters Patent No. 563,878, dated July 14, 1896.

Application filed September 29, 1894. Serial No. 524,445. (No model.)

*To all whom it may concern:*

Be it known that I, ANDREW G. PAUL, a citizen of the United States, and a resident of Boston, in the county of Suffolk and State of Massachusetts, have invented an Improvement in Means for Lifting and Transferring Liquids and other Substances, of which the following is a full, clear, and exact specification, reference being had to the accompanyings drawings, which form a part hereof.

My invention relates to devices or apparatus for use in lifting and conveying or transferring liquids or other similar substances from a point of supply to any point where it is desired to deliver or use such liquids or other similar substances.

The object and special purpose of my improvement is to enable such substances to be transferred from one point to another over an object or obstruction which is at a higher level than the substance to be transferred, or to enable such substances to be lifted from one level to a higher level.

Another object of my invention is to enable these results to be accomplished efficiently and at the same time economically.

My invention is especially adapted to the handling and lifting of hot water and other hot liquids.

My invention consists, broadly, in the combination, with a transfer-pipe adapted to hold and convey the substance to be transferred and provided with two depending portions or legs, of a seal at or near the outer or discharge end of the transfer-pipe operating to prevent a flow into the transfer-pipe at that point of any substance other than that being transferred, and of an exhaust-pipe connected with the transfer-pipe above the seal and provided with automatic means for permitting the air and gases from the transfer-pipe to flow through said exhaust-pipe while preventing any substantial quantity of the substance being transferred from flowing therethrough, and of an exhauster so connected with the exhaust-pipe as to cause a flow from the transfer-pipe into the exhaust-pipe.

My invention consists also in providing the exhaust-pipe with a restricted or contracted passage or opening for automatically restricting and regulating the flow through the exhaust-pipe in the manner stated.

My invention consists also in providing the supply end or leg of the transfer-pipe with a valve for the purpose of permitting liquid or other substance to pass up through the transfer-pipe while preventing any backward or return flow of such liquid through the supply-leg of the transfer-pipe.

My invention also consists in combining with the transfer-pipe at its outer or discharge end a trap device so constructed as to enable the liquid or other substance to be discharged from the discharge end or leg of the transfer-pipe where such discharge-leg of the transfer-pipe is not of sufficient length to cause the substance to be discharged by the weight of its own column contained therein.

My invention is fully illustrated in the accompanying drawings, in which—

Figure 1 shows one form of my improved apparatus arranged to lift and transfer liquid from a vessel A to a point at or about the same level. Fig. 2 shows my improved apparatus as applied to the lifting of water from a well or cistern to a tank on the upper floor of a house. Fig. 3 shows another form of my apparatus arranged to lift and convey water from a higher to a lower level over some elevated point. Fig. 4 shows my improvement as applied to the lifting and transferring of the water of condensation in a steam-heating system over an intervening passage-way or other obstruction to a return-tank.

Similar letters of reference indicate similar parts in the different figures.

Referring to Fig. 1, A is a vessel containing a quantity of water B. C is the transfer-pipe, which, in the form shown, consists of three parts, the supply end or leg D, the slightly-inclined connecting portion E, and the discharge-leg F. The discharge-leg F has a short horizontal portion or connection G at its lower end. H is an exhaust-pipe connected with the transfer-pipe. In the form shown in Fig. 1 this exhaust-pipe is connected at the upper end of the discharge-leg F. The point of connection between the exhaust-pipe and the transfer-pipe may be considerably varied, however. I is a restricted passage in the ex-

haust-pipe for restricting or limiting and regulating the current passing into the exhaust-pipe. J is an exhausting device connected with the exhaust-pipe. I prefer to use an ordinary ejector to be worked by steam or water or air. As the particular form of ejector forms no part of my invention, I have not shown or described the special construction thereof. K is a check-valve of ordinary construction placed at the discharge end of the transfer-pipe. I prefer to use what is known as a "straightway" check-valve. L is a check-valve of similar construction placed in the supply-leg of the transfer-pipe near its lower end, that is, near the surface of the liquid to be raised. This check-valve may, however, be put at a higher or lower point in the supply-leg of the transfer-pipe, as may be desired. The check-valve K at the outer end of the transfer-pipe permits the discharge of the water from the discharge-leg, but prevents any air or water from entering the transfer-pipe at that point. The check-valve L on the supply-leg permits the water to pass up through the supply-leg of the transfer-pipe, but prevents the water from flowing back into the vessel A. The restricted passage in the exhaust-pipe may be varied somewhat in size, according to the size of the transfer-pipe and the conditions of its use and operation. The best results have been secured by me in transferring hot liquid of a temperature above 130° Fahrenheit and by employing a transfer-pipe having a supply-leg three-eighths of an inch in diameter and a discharge-leg one-half an inch in diameter and an exhaust-pipe one-quarter of an inch in diameter and a restricted passage varying from one thirty-second to one sixty-fourth of an inch in diameter, or having a cross-sectional area equivalent thereto, and having a length of about half an inch.

The operation of the device shown in Fig. 1 is as follows: The exhauster is started and the air and other contents of the transfer-pipe above the water in the vessel A are caused to flow out through the restricted passage in the exhaust-pipe to be discharged. As the check-valve K prevents the admission of any air or other substance at the outer end of the transfer-pipe, the liquid from the vessel A rises through the supply-leg of the transfer-pipe until it reaches the level of the inclined connecting portion E, when it at once begins to flow through the inclined portion E and into the discharge-leg F, collecting at the lower end of the latter above the check-valve K. The water continues to collect in the discharge-leg F until the column of water therein is sufficient to open the check-valve K and cause a discharge therethrough. The restricted opening in the exhaust-pipe so restricts or limits and regulates the flow of the air and other matter through the exhaust-pipe that, as I have found in my experience, the inclined connecting portion E will not be filled completely with water, but only a small portion of that pipe will be filled with water. The water will not be caused to flow to any appreciable extent through the restricted opening of the exhaust-pipe, but will continue to flow through the transfer-pipe intermittently as long as there is water enough to fill the supply-leg of the transfer-pipe and seal the lower end of the same. If the water in the vessel A falls below the level of the lower end of the supply-leg, the flow of water through the transfer-pipe will cease, but if more water is supplied to the vessel A, so as to seal that end of the transfer-pipe again, the water will at once begin to flow again through the transfer-pipe.

I have found in my experience that the discharge from the outer leg of the discharge-pipe is intermittent, and that the water in the discharge-leg alternately rises and falls, which would seem to show that the power governing the discharge of the water is the column of water in the discharge-leg. I have also found that the discharge-leg is never entirely filled with water. I have also found that from time to time globules or small quantities of water pass into the exhaust-pipe and partly or wholly close the restricted opening therein, being apparently carried into that pipe by the velocity of the air or gases escaping therethrough. This shutting off of the exhaust-pipe seems to be dependent upon or regulated by the space between the two columns of water in the transfer-pipe. The discharge of water from the discharge-leg appears to follow upon the shutting off of the exhaust-pipe in the manner explained above. The restricted or contracted passage or opening in the exhaust-pipe acts automatically to permit the air and gases from the transfer-pipe to flow through the exhaust-pipe, but to prevent any substantial quantity of the water or other substance that is being transferred from flowing through said exhaust-pipe.

It will be apparent from what has been stated that by means of the device shown in Fig. 1 water can be lifted and transferred even where there is not enough to entirely fill the transfer-pipe C, as it is only necessary that there should be a sufficient amount of water to fill the supply-leg and have a column in the discharge-leg sufficient to open the check-valve K. It will also be apparent that by means of this device the water can be transferred as rapidly as it is supplied to the vessel A. If the supply is constant, the flow of water through the transfer-pipe will continue. If the supply is intermittent, so as to alternately seal and unseal the lower end of the supply-leg of the transfer-pipe, the flow of liquid through the transfer-pipe will be intermittent in the same way, the flow starting at once whenever a fresh supply is introduced into the vessel A, sealing the lower end of the transfer-pipe. This operation is greatly facilitated by the check-valve L in the supply-leg. When the device is first put into

operation and a column of water collected in the supply-leg, the check-valve L maintains that column of water constantly and prevents it from flowing back into the vessel A. If, for example, at any time the water in the vessel A falls below the level of the inner end of the transfer-pipe, the flow through the transfer-pipe is at once stopped, and if the check-valve L were not present the column of water in the leg D would at once drop, the water flowing back into the vessel A. When the apparatus was again started, so as to cause a flow, the water in the vessel A would have to be lifted again through the supply-leg of the device, so as to have a column therein before any of it would be transferred to the discharge-leg. In other words, the work of first establishing a column in the supply-leg would have to be done over again each time the apparatus was started. The check-valve L overcomes this difficulty by maintaining a column of water in the supply-leg after it has been once formed therein. When the flow has been interrupted by the unsealing of the lower end of the supply-leg and a fresh supply is thereafter introduced into the vessel A, the flow of liquid from the supply-leg to the discharge-leg begins at once and without it being necessary first to reëstablish the column of liquid in the supply-leg.

Referring to Fig. 2, A represents a well or cistern, from which water is to be lifted to a tank or trap M at the upper part of the house. B is the water in the well. C is the transfer-pipe. D is the supply-leg thereof. E is the slightly-inclined connecting portion. F is the discharge-leg. G is a short horizontal portion at the lower end of the discharge-leg. H is the exhaust-pipe. I is a restricted passage in the exhaust-pipe. J is the exhausting device. K is a check-valve at the lower end of the discharge-leg, and L a check-valve near the lower end of the supply-leg. N represents the floors of the house. The discharge-leg F empties into the tank M. The tank M is an air-tight tank or trap. O is a discharge-pipe leading from the bottom of the tank M. This pipe O is provided with a valve device P, which is preferably in the form of a straight-way check-valve. R is an air-pipe connected with the upper part of the tank M and provided with any suitable valve. The exhaust-pipe H has two branches, one leading to the discharge-leg of the transfer-pipe, the other leading to the top of the tank or trap M, each branch being provided with a restricted passage. S is a gage connected with the tank M for the purpose of showing the level of the contents of the tank. The operation of this device is in the main similar to the operation of the device in Fig. 1. When the water flows into the discharge-leg F, it passes at once into the tank or trap M through the valve K, since the pressure is the same on each side of the check-valve K, the air or other contents of the trap M being caused to flow out through the vertical branch of the exhaust-pipe in the same way as the air or other contents of the transfer-pipe are caused to flow out through the upper branch of the exhaust-pipe. When the tank M has been filled to the desired extent, the valve on the air-pipe R is opened, admitting the atmospheric pressure on top of the contents of the tank M. The contents of the tank M will at once flow through the check-valve P to any point desired, as, for example, into the water-pipes which supply the various parts of the house with water. The check-valve K prevents the air or atmospheric pressure from passing into the transfer-pipe. While the contents of the tank M are being discharged in the manner stated through the discharge-pipe O, the flow of water through the transfer-pipe will continue and a column of water will be formed in the discharge-leg above the check-valve K. When a new supply is needed for the tank M, the valve on the air-pipe R is closed. The pressure in the tank M will at once be equalized with the pressure in the discharge-leg, and the water will at once flow from the discharge-leg through the valve K into the tank M, as before.

Referring to Fig. 3, similar letters indicate similar parts. In the device shown in this drawing no check-valve is placed in the supply-leg and no trap device is connected with the discharge-leg. The operation of this device is the same as the operation of the device shown in Fig. 1, except that as there is no check-valve in the supply-leg the column of water is not continuously maintained therein, and when, after an interruption of the flow the current is again started, the water has to be again drawn up into the supply-leg to form a column therein before any of it passes into the discharge-leg. By omitting the check-valve from the supply-leg it is possible to allow all the contents of the transfer-pipe to be drained out of it by simply stopping the exhauster.

Fig. 4 shows my improvement applied to the transferring of the water of condensation in a heating system. *a* represents the steam-supply pipe of the system. *b* is an ordinary radiator, which is connected in the usual manner with the steam-supply pipe. *c* is the return-pipe for the water of condensation, which is connected with the lower part of the radiator in any suitable manner. The return-pipe is also shown as connected with the lower end of the steam-supply pipe to drain any water of condensation that may be formed in the latter. In this device the water of condensation would collect in the return-pipe *c*. *d* is the return-tank, to which it is desirable to return the water of condensation. *e* represents a passage-way in a house or building or any other obstruction of such a character as would prevent the return-pipe *c* from being connected directly with the tank *d*. It sometimes happens in heating plants that by reason of such passage-ways or other obstructions it is impossible to drain the water of con-

densation directly to the return-tank. In such cases it is necessary either to discharge the water of condensation from the system, which results in a considerable loss of heat and energy, or to cause the water to pass over the obstruction. My improved apparatus is shown in Fig. 4 as connected with such a return-pipe, so as to accomplish this result. C is the transfer-pipe. D is the supply-leg thereof. E is the slightly-inclined connecting portion. F is the discharge-leg. H is the exhaust-pipe. I is a restricted passage in the same. J is an exhausting device. K is a check-valve in the discharge-leg, and L is a check-valve in the supply-leg.

The operation of the device shown in Fig. 4 is the same as the operation of the device as shown in the other figures. As soon as the water collects in the return-pipe *c* it will gradually rise in the supply-leg D until the supply-leg is filled, and then the water of condensation will begin to flow into the discharge-leg. When a sufficient column of water collects in the discharge-leg to open the check-valve K, the water will begin to flow into the return-tank *d*. As a result of this operation the return-pipe *c* would be kept substantially free of water. Whenever a small amount of water collected therein it would be at once transferred through the transfer-pipe. If my device were not used in such a case and the water of condensation were not discharged from the return-pipe *c* independently, as into the atmosphere, and thus wasted, the water of condensation would collect in that pipe and in the radiator until the radiator and its connecting-pipes were flooded. My improved device in this way overcomes the difficulty, which is sometimes a serious one in steam-heating systems, and does so by a simple, inexpensive, and automatic arrangement.

Having thus described my invention, what I claim as new, and desire to secure by Letters Patent, is—

1. A device for lifting and transferring liquids and other substances, consisting of the combination of a transfer-pipe provided with a supply-leg and a discharge-leg, a seal at or near the outer end of the discharge-leg, an exhaust-pipe connected with the transfer-pipe above the seal, and provided with automatic means for permitting the air and gases from the transfer-pipe to flow through said exhaust-pipe while preventing any substantial quantity of the substance being transferred from flowing therethrough, and an exhauster connected with the exhaust-pipe, substantially as set forth.

2. A device for lifting and transferring liquids and other substances, consisting of the combination of a transfer-pipe, provided with a supply-leg and a discharge-leg, a seal at or near the outer end of the discharge-leg, an exhaust-pipe connected with the transfer-pipe above the seal, and provided with a restricted opening adapted to permit the air and gases from the transfer-pipe to flow through said exhaust-pipe but to prevent any substantial quantity of the substance being transferred from flowing therethrough, and an exhauster connected with the exhaust-pipe, substantially as set forth.

3. A device for lifting and transferring liquids and other substances, consisting of the combination of a transfer-pipe provided with a supply-leg and a discharge-leg, a seal consisting of a valve device at or near the outer end of the discharge-leg, an exhaust-pipe connected with the transfer-pipe above the seal and provided with a restricted opening adapted to permit the air and gases from the transfer-pipe to flow through said exhaust-pipe but to prevent any substantial quantity of the substance being transferred from flowing therethrough and an exhauster connected with the exhaust-pipe, substantially as set forth.

4. A device for lifting and transferring liquids and other substances, consisting of the combination of a transfer-pipe provided with a supply-leg and a discharge-leg, a valve in the supply-leg, a seal at or near the outer end of the discharge-leg, an exhaust-pipe connected with the transfer-pipe above the seal and provided with a restricted opening adapted to permit the air and gases from the transfer-pipe to flow through said exhaust-pipe but to prevent any substantial quantity of the substance being transferred from flowing therethrough, and an exhauster connected with the exhaust-pipe, substantially as set forth.

5. A device for lifting and transferring liquids and other substances consisting of the combination of a transfer-pipe provided with a supply-leg and a discharge-leg, a valve in the supply-leg, a seal consisting of a valve device at or near the outer end of the discharge-leg, an exhaust-pipe connected with the transfer-pipe above the seal and provided with a restricted opening adapted to permit the air and gases from the transfer-pipe to flow through said exhaust-pipe but to prevent any substantial quantity of the substance being transferred from flowing therethrough and an exhauster connected with the exhaust-pipe, substantially as set forth.

6. A device for lifting and transferring liquids and other substances consisting of the combination of a transfer-pipe provided with a supply-leg and a discharge-leg, a check-valve in the supply-leg, a check-valve at or near the outer end of the discharge-leg, an exhaust-pipe connected with the transfer-pipe above the check-valve of the discharge-leg and provided with a restricted opening adapted to permit the air and gases from the transfer-pipe to flow through said exhaust-pipe but to prevent any substantial quantity of the substance being transferred from flowing therethrough, and an exhauster connected with the exhaust-pipe, substantially as set forth.

7. A device for lifting and transferring liquids and other substances, consisting of the combination of a transfer-pipe provided with a supply-leg and a discharge-leg, a trap at the outer end of the discharge-leg provided with an air connection, an exhaust-pipe connected with the transfer-pipe above the trap and also connected with the trap, the said exhaust-pipe being provided with a restricted opening near the transfer-pipe and another restricted opening near the trap, and an exhauster connected with the exhaust-pipe, substantially as set forth.

8. A device for lifting and transferring liquids and other substances, consisting of the combination of a transfer-pipe provided with a supply-leg and a discharge-leg, a check-valve in the supply-leg, a trap at the outer end of the discharge-leg provided with an air connection, an exhaust-pipe connected with the transfer-pipe above the trap and also connected with the trap, the said exhaust-pipe being provided with a restricted opening near the transfer-pipe and another restricted opening near the trap, and an exhauster connected with the exhaust-pipe, substantially as set forth.

9. A device for lifting and transferring liquids and other substances, consisting of the combination of a transfer-pipe provided with a supply-leg and a discharge-leg, a check-valve at or near the outer end of the discharge-leg, a closed tank into which the discharge-leg empties, a discharge-pipe leading from said tank, a valve device in said discharge-pipe, an air-pipe connected with said tank and a valve device in said air-pipe, an exhaust-pipe connected with the transfer-pipe above the check-valve in the discharge-leg and also connected with the tank, said exhaust-pipe being provided with a restricted opening near the transfer-pipe and with another restricted opening near the tank, and an exhauster connected with the exhaust-pipe, substantially as set forth.

10. A device for lifting and transferring liquids and other substances, consisting of the combination of a transfer-pipe provided with a supply-leg and a discharge-leg, a valve in the supply-leg, a check-valve at or near the outer end of the discharge-leg, a closed tank into which the discharge-leg empties, a discharge-pipe leading from said tank, a valve device in said discharge-pipe, an air-pipe connected with said tank and a valve device in said air-pipe, an exhaust-pipe connected with the transfer-pipe above the check-valve in the discharge-leg and also connected with the tank, said exhaust-pipe being provided with a restricted opening near the transfer-pipe and with another restricted opening near the tank, and an exhauster connected with the exhaust-pipe, substantially as set forth.

11. A device for lifting and transferring liquids and other substances, consisting of the combination of a transfer-pipe provided with a supply-leg and a discharge-leg, a check-valve in the supply-leg, a check-valve at or near the outer end of the discharge-leg, a closed tank into which the discharge-leg empties, a discharge-pipe leading from said tank, a valve device in said discharge-pipe, an air-pipe connected with said tank and a valve device in said air-pipe, an exhaust-pipe connected with the transfer-pipe above the check-valve in the discharge-leg and also connected with the tank, said exhaust-pipe being provided with a restricted opening near the transfer-pipe and with another restricted opening near the tank, and an exhauster connected with the exhaust-pipe, substantially as set forth.

12. A device for lifting and transferring the water of condensation of a heating system, consisting of the combination with the radiators and pipes of a heating system of a transfer-pipe connected with the return-pipe of the system and provided with a supply-leg and a discharge-leg, a seal consisting of a valve device at or near the outer end of the discharge-leg, an exhaust-pipe connected with the transfer-pipe above the seal and provided with a restricted opening adapted to permit the air and gases from the transfer-pipe to flow through said exhaust-pipe but to prevent any substantial quantity of the substance being transferred from flowing therethrough, and an exhauster connected with the exhaust-pipe, substantially as set forth.

13. A device for lifting and transferring the water of condensation of a heating system, consisting of the combination with the radiators and pipes of a heating system of a transfer-pipe connected with the return-pipe of the system and provided with a supply-leg and a discharge-leg, a check-valve in the supply-leg, a seal consisting of a valve device at or near the outer end of the discharge-leg, an exhaust-pipe connected with the transfer-pipe above the seal and provided with a restricted opening adapted to permit the air and gases from the transfer-pipe to flow through said exhaust-pipe but to prevent any substantial quantity of the substance being transferred from flowing therethrough, and an exhauster connected with the exhaust-pipe, substantially as set forth.

14. A device for lifting and transferring the water of condensation of a heating system, consisting of the combination with the radiators and pipes of a heating system of a transfer-pipe connected with the return-pipe of the system and provided with a supply-leg and a discharge-leg, a check-valve in the supply-leg, a check-valve at or near the outer end of the discharge-leg, an exhaust-pipe connected with the transfer-pipe above the seal and provided with a restricted opening

adapted to permit the air and gases from the transfer-pipe to flow through said exhaust-pipe but to prevent any substantial quantity of the substance being transferred from flowing therethrough, and an exhauster connected with the exhaust-pipe, substantially as set forth.

In testimony whereof I have signed my name to this specification in the presence of two subscribing witnesses.

ANDREW G. PAUL.

Witnesses:

SIDNEY MANN,

EDITH J. GRISWOLD.