(No Model.) 2 Sheets—Sheet 1.

W. B. MANN.

HEAD REST.

No. 544,106. Patented Aug. 6, 1895.

Fig. 1.

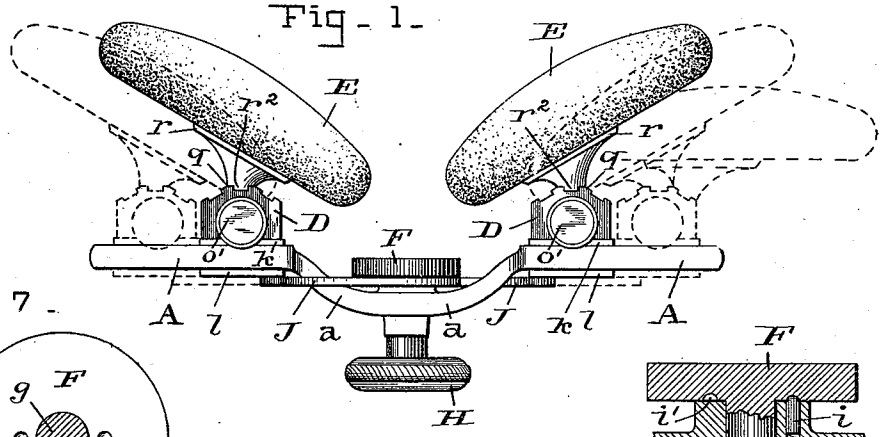

Fig. 7.

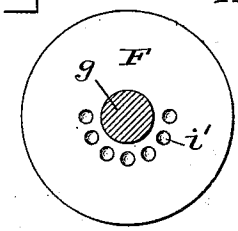

Fig. 8.

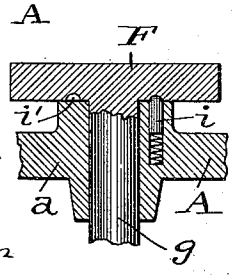

Fig. 2.

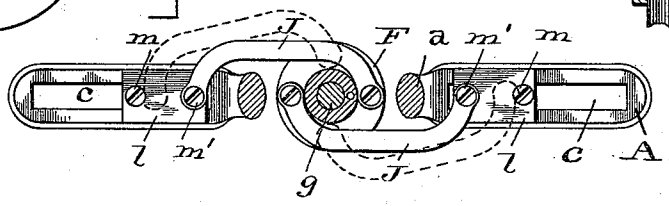

Fig. 3.

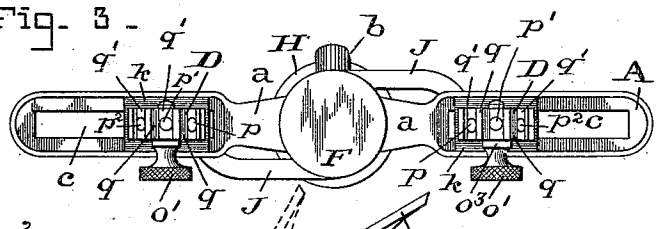

Fig. 4.

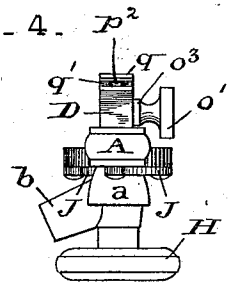

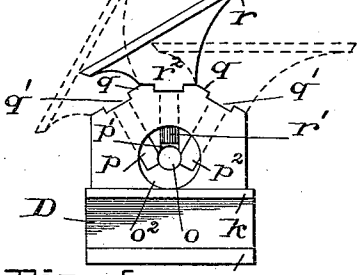

Fig. 5.

Fig. 6.

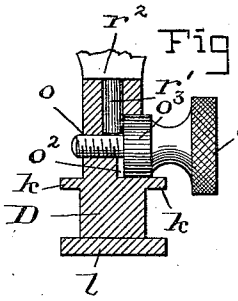

Fig. 9.

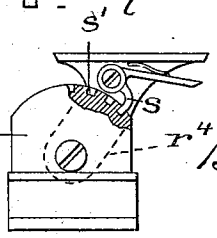

WITNESSES:—

L. I. Van Horn

C. Calvert Hines

INVENTOR:

Wm B. Mann

By Chas B. Mann

ATTORNEY.

(No Model.) 2 Sheets—Sheet 2.

W. B. MANN.

HEAD REST.

No. 544,106. Patented Aug. 6, 1895.

Fig. 10.

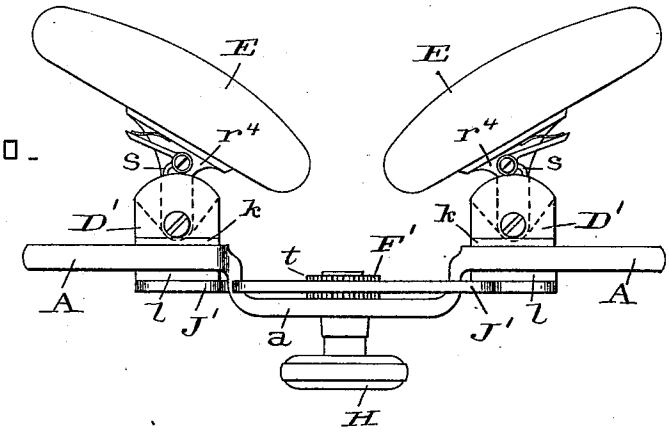

Fig. 11.

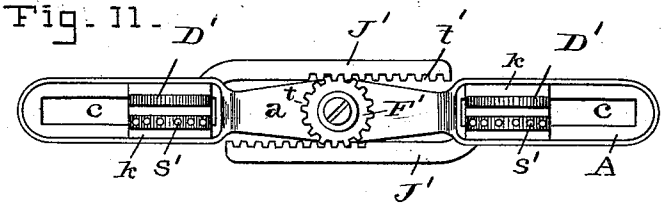

Fig. 12.

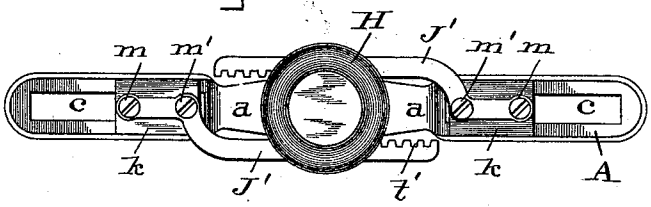

Fig. 13.

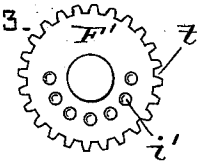

WITNESSES:-

L. S. Van Horn.

C. Calvert Hines

INVENTOR:-

Wm B. Mann

By Chas B. Mann

ATTORNEY.

UNITED STATES PATENT OFFICE.

WILLIAM B. MANN, OF BALTIMORE, MARYLAND.

HEAD-REST.

SPECIFICATION forming part of Letters Patent No. 544,106, dated August 6, 1895.

Application filed April 2, 1895. Serial No. 544,150. (No model.)

To all whom it may concern:

Be it known that I, WILLIAM B. MANN, a citizen of the United States, residing at Baltimore, in the State of Maryland, have invented certain new and useful Improvements in Head-Rests, of which the following is a specification.

This invention relates to an adjustable head-rest for dental and other chairs.

One of the objects of the invention is to provide a head-rest of improved construction in which the cushion which supports the person's head is made in two parts or sections, which are adjustable or movable simultaneously and in unison relative to the center of the supporting-bar on which they are mounted, and another object is to provide simple and effective means whereby each cushion-section may be independently adjusted relative to the said supporting-bar at various angles of inclination.

In the accompanying drawings, illustrating the invention, Figure 1 is a back view or elevation of a head-rest embodying my invention. Fig. 2 is a bottom or inverted plan view of the head-rest supporting-bar, but partly in section. Fig. 3 is a top or plan view of the supporting-bar and the movable parts. Fig. 4 is an end view of the parts seen in Fig. 3, looking from the left toward the right. Fig. 5 is a side view of one of the cushion-supports, illustrating the angle adjustability of the cushion. Fig. 6 is a vertical cross-section of one of the cushion-supports. Fig. 7 is a bottom view of the oscillatory head. Fig. 8 is a vertical cross-section of the oscillatory head and its bearing. Fig. 9 shows a modification of the cushion-support. Figs. 10, 11, 12, and 13 show a rear elevation, a top, a bottom plan view, and a detail view, respectively, of a modification in the means for adjusting the cushions relative to each other.

In the accompanying drawings, Figs. 1 to 8, inclusive, the letter A designates a horizontal supporting-bar, which has a depressed or down-curved center *a*. This bar carries on the under surface of said depressed center an inclined tubular socket *b*, to engage with a screw-stud on the ordinary head-rest supporting-arm of a dental chair. The two ends of the horizontal bar are each provided with a slot or slideway *c*, in each of which a cushion-support D is mounted. Each cushion-support carries a cushion E. Provision is made whereby the two cushion-supports D and cushion E may be moved simultaneously and in unison toward and from each other in the slideways *c*, so as to adjust them for increasing or diminishing the space between them to suit the heads of different persons or the arrangement of hair on ladies' heads.

In Figs. 1 to 4, inclusive, and in Fig. 7, the letter F designates an oscillatory head mounted on the upper end of a spindle or stem *g*, which extends through the depressed center *a* of the supporting-bar, and at its lower end the spindle carries an adjusting-knob H, by means of which the oscillatory head may be turned backward or forward. A locking device comprises a spring-pressed detent *i* on the supporting-arm A, which is adapted to engage any one of a series of holes *i'* on the bottom of the oscillatory head, as shown in Figs. 7 and 8. This locking device serves to hold the oscillatory head in a fixed position and prevents it from accidentally turning.

The oscillatory head is connected with each of the cushion-supports D by a link J. One end of each link is attached to each cushion-support and the other end, which is curved, to the bottom of the oscillatory head, the attachment of one link to the head F being at a point diametrically opposite that of the other link, as shown in Fig. 2. This figure shows by full lines the position the two links take when the cushion-supports D are at the inner end of the slideway *c* or when they are in closest relation to each other, and by broken lines the position of the links when the cushion-supports are separated or moved half-way of their fullest extent from each other. It will be observed, therefore, by reference to Fig. 2, that when the adjusting-knob H is grasped by the hand and turned to the left, so as to cause the oscillatory head to make a half-revolution in that direction, the two cushion-supports D will be moved in the slideway *c* simultaneously and in unison farther apart, and that when the knob is given a half-turn to the right, or in the reverse direction to that just described, the cushion-supports will likewise be moved simultaneously and in unison toward each other or back

to their original position. (Shown by full lines.) By this means the cushion-supports may be adjusted to any desired position toward or away from each other, and will be held at any position from accidental movement by the locking device i i'.

Each cushion-support D consists of a block the lower part of which extends down through the slot c, and above the bar is provided at each side with a lateral flange k, which rests and slides upon the upper surface of the bar. The block is confined in the slot by a plate l, attached to the bottom by screws m m'. The block has a center hole o for a set-screw o', and at one side of the block is a socket o^2 concentric with said hole, and on top the block has pin-holes—in the present instance three in number p p' p^2—which extend down to the said center hole. At the top these holes are separated by ridges or ribs q, forming between them grooves q'. These holes are adapted to receive a holding-pin r', projecting from a plate r on the bottom of each cushion E. By this construction and relation it will be seen that when the pin r' of the cushion is inserted into the hole p, for instance, the cushion will be set at a different angle or inclination relative to the supporting-bar A than when set in either of the other holes p' p^2, as will be understood by reference to Figs. 1 and 5. A cross projection r^2 is at the base of the pin r' and is adapted to take into the seat-groove q' between the ridges q, to prevent turning of the said pin and cushion. Thus said pin does not act as a pivot. The set-screw o' has a clamping-head o^3, which fits in the socket o^2 in position to bear against or clamp the pin r', adjoining the center hole o, when said pin is inserted in either one of the three holes p p' p^2, so as to hold the pin and cushion rigid. By this arrangement a simple and effective construction is provided to hold said cushions at the desired angle of inclination.

Figs. 9, 10, 11, 12, and 13 show modified forms of the parts just described. In this instance, in order to change the angle of inclination of each cushion E, a shank r^4 is pivoted in a slot in the support D' by a screw. A pawl s on the shank is provided and has a point end to engage with a series of notches s' in the top of the said support and thereby hold the cushion at the desired angle of inclination. In these figures the oscillatory head F' is provided on its rim edge with gear-teeth t, and one end of each link J' is made fast to the cushion-support D', and the other end is unattached and has gear-teeth t', which mesh with the teeth of the oscillatory head. The relation of these parts is the same as in the other figures, and the two cushion-supports D' are in the same manner adjustable toward and away from each other simultaneously and in unison, as will be readily observed.

Having thus described my invention, what I claim as new, and desire to secure by Letters Patent, is—

1. In a head-rest, the combination of a supporting bar for attachment to a dental chair, having its center depressed below its ends and the latter provided with slideways; a cushion-support mounted on each slideway; a revoluble spindle extending through the bar at the depressed center; an oscillatory-head fixed on the upper end of said spindle and having position in the said center depression; a link attached by one end to each of said cushion-supports below the bar and the other end of each link engaging with the oscillatory-head above the bar; and an adjusting knob attached to the lower end of the spindle below the said bar, substantially as described.

2. In a head-rest, the combination of a supporting bar; two cushion-supports movable on the bar; a spindle extending through the said bar; an oscillatory-head fixed on the said spindle below the plane of the major portion of the bar; two links each having one end attached to one of said cushion-supports and the other ends of the links curved and connected with the said oscillatory-head at points diametrically opposite each other, one link extending along one edge of the bar and the other link extending along the opposite edge of the bar; and an adjusting knob fixed on the spindle at the side of the bar opposite the said oscillatory-head.

3. In a head-rest, the combination of a supporting bar; two cushion-supports movable on the bar; an oscillatory head; a connection between each of the said cushion-supports and the oscillatory head, whereby said cushion-supports may be adjusted toward or away from each other simultaneously and in unison; and means whereby each cushion may be adjusted independently of the other at various angles of inclination.

4. A head-rest having a supporting bar; two cushion-supports mounted on the bar and each provided at its side with a socket and having at the top of the support a number of holes spaced apart and all extending to said socket; a cushion for each support and provided with a pin adapted to enter either of said holes and its end be exposed at the said socket; and a set-screw entered in the socket and adapted to clamp the said pin.

In testimony whereof I affix my signature in the presence of two witnesses.

WILLIAM B. MANN.

Witnesses:
C. CALVERT HINES,
L. ISMY VAN HORN.