(No Model.)

4 Sheets—Sheet 1.

A. J. SHAW.

HOISTING MACHINERY.

No. 505,065. Patented Sept. 12, 1893.

Fig. 1.

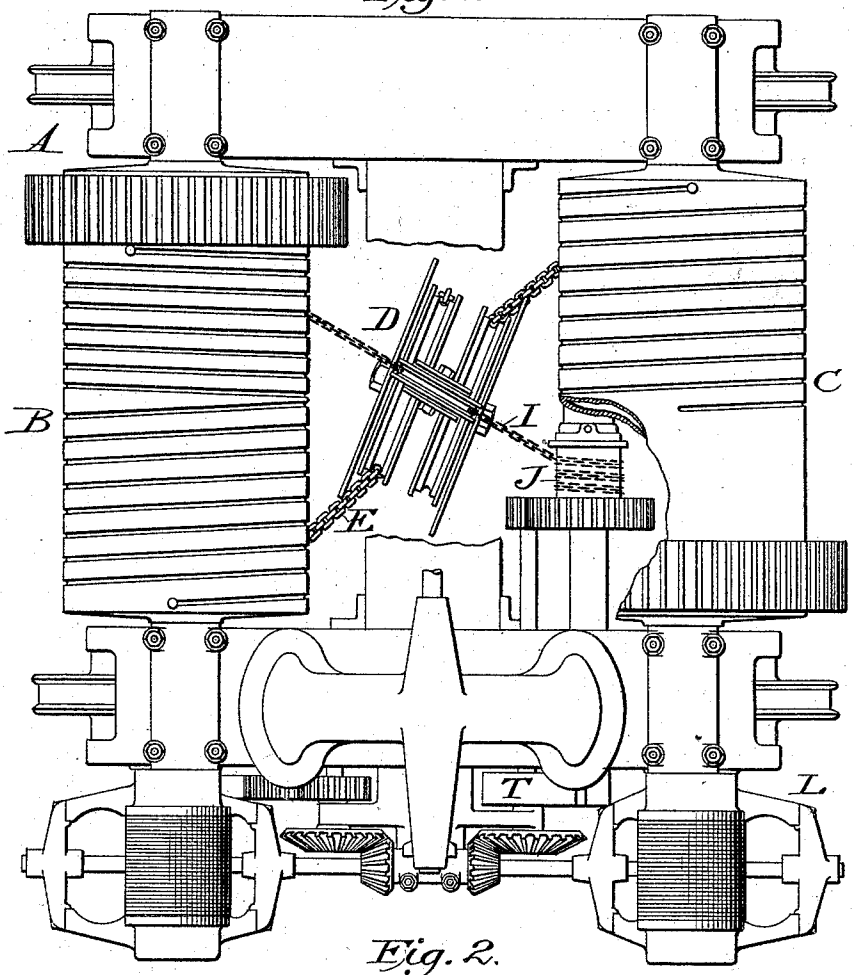

Fig. 2.

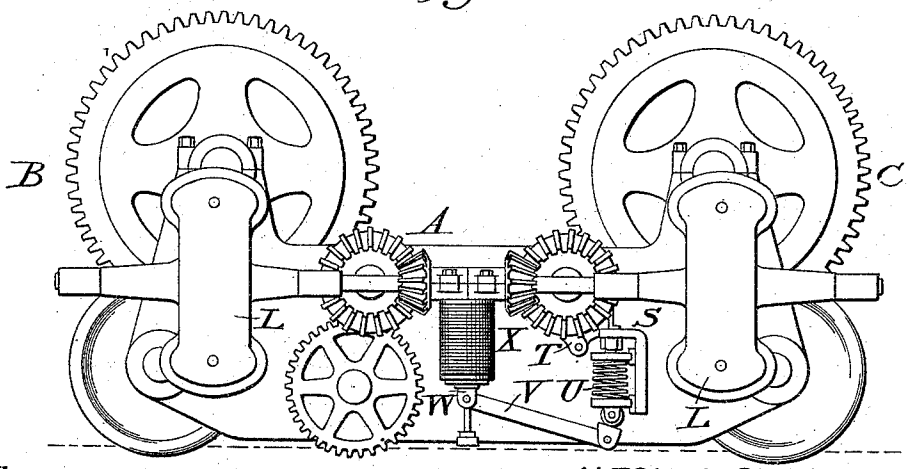

Witnesses:
C. B. Bull.
James F. Duhamel.

ALTON J. SHAW,
Inventor,
by Dodger Bros,
Attys.

(No Model.)

4 Sheets—Sheet 2.

A. J. SHAW.

HOISTING MACHINERY.

No. 505,065. Patented Sept. 12, 1893.

Fig. 3.

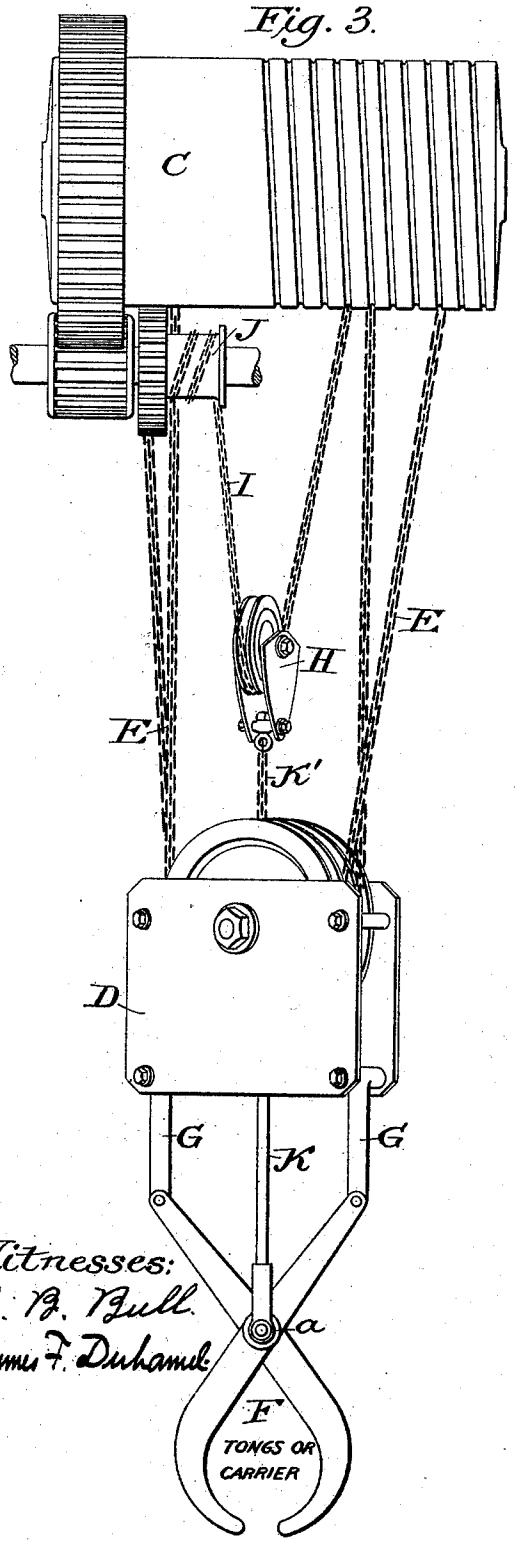

Fig. 4.

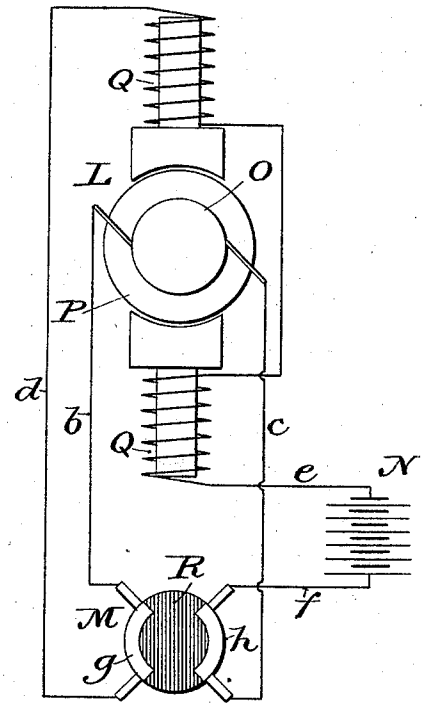

Fig. 5.

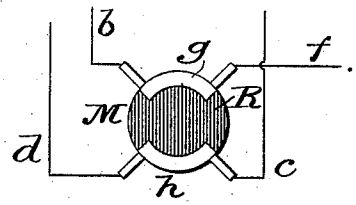

Fig. 6.

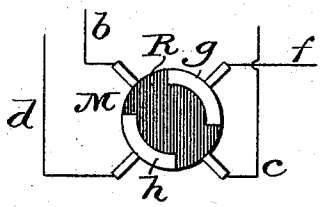

Witnesses:
C. B. Bull.
James F. Duhamel.

ALTON J. SHAW,
Inventor,
by Dodger & Sons,
Attys.

(No Model.) 4 Sheets—Sheet 3.

A. J. SHAW.

HOISTING MACHINERY.

No. 505,065. Patented Sept. 12, 1893.

Fig. 7.

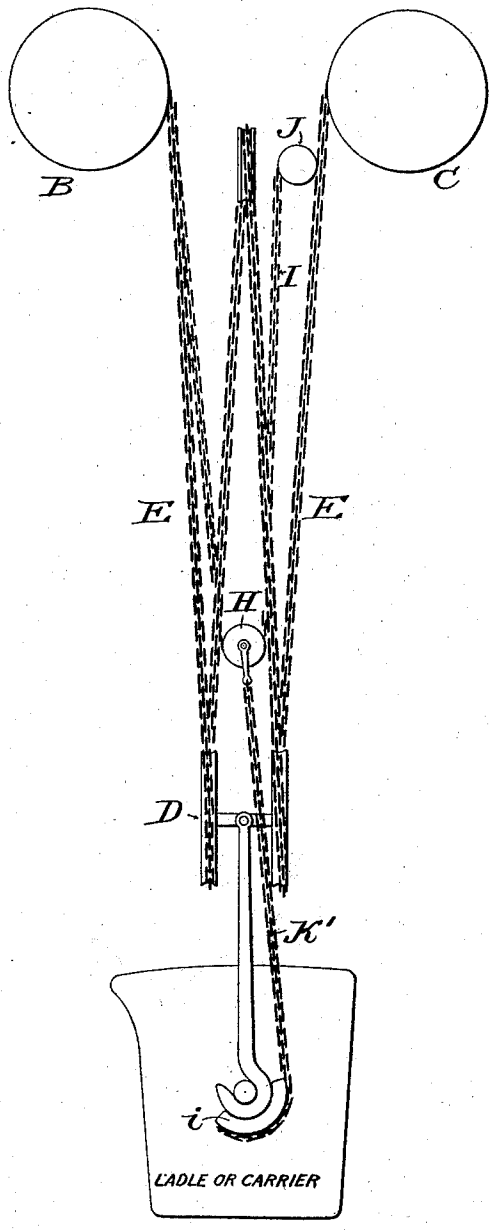

Fig. 8.

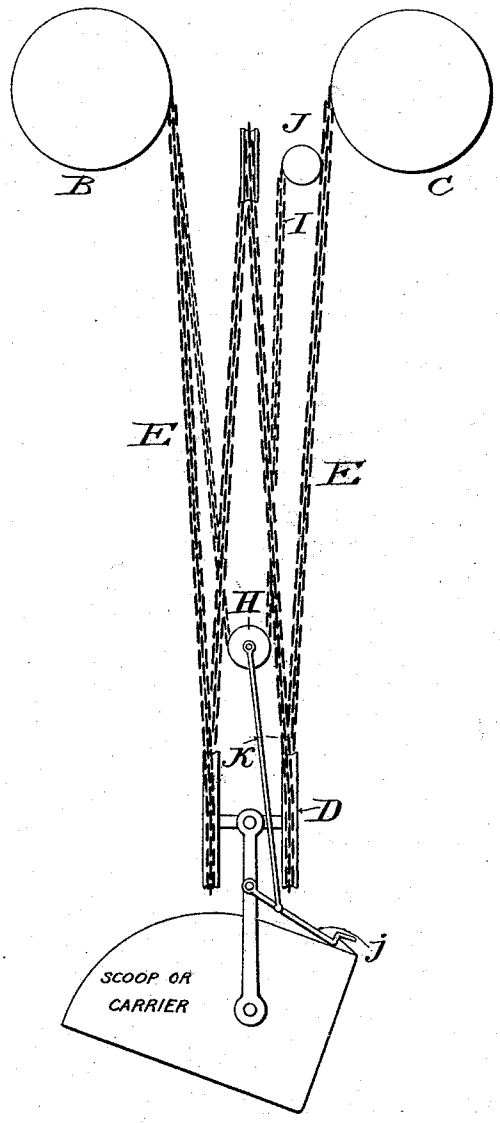

Witnesses:
C. B. Bull
James F. Duhamel

ALTON J. SHAW,
Inventor,
by Dodger Sons,
Attys

(No Model.)

4 Sheets—Sheet 4.

A. J. SHAW.

HOISTING MACHINERY.

No. 505,065.

Patented Sept. 12, 1893.

Fig. 9.

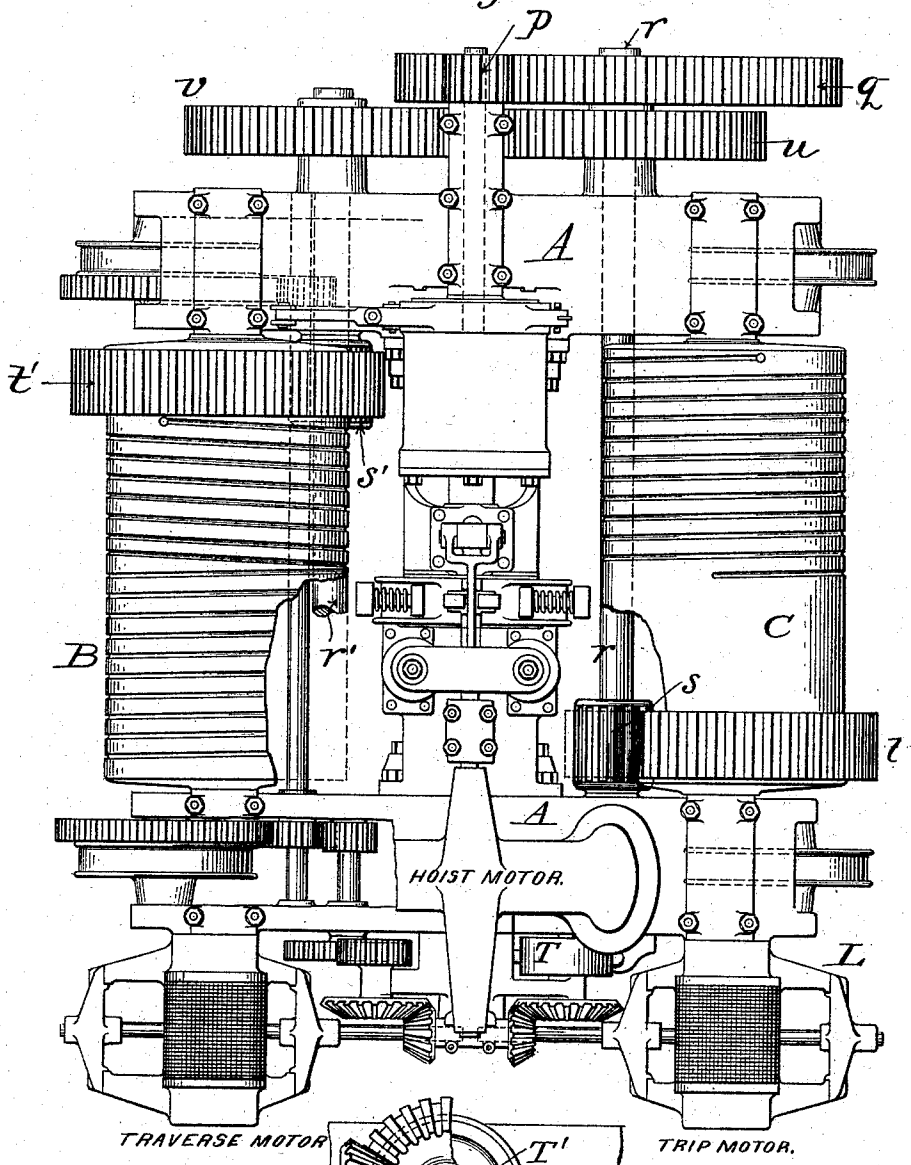

Fig. 10.

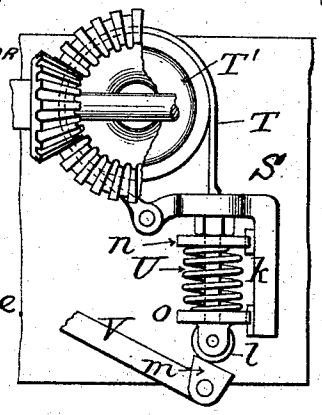

WITNESSES:

C. C. Burdine.

Horace A. Dodge.

INVENTOR:

Alm J. Shaw,

per Dodger Sons, ATT'YS

UNITED STATES PATENT OFFICE.

ALTON J. SHAW, OF MUSKEGON, MICHIGAN, ASSIGNOR TO THE SHAW ELECTRIC CRANE COMPANY, OF SAME PLACE.

HOISTING MACHINERY.

SPECIFICATION forming part of Letters Patent No. 505,065, dated September 12, 1893.

Application filed November 15, 1892. Serial No. 452,047. (No model.)

To all whom it may concern:

Be it known that I, ALTON J. SHAW, a citizen of the United States, residing at Muskegon, in the county of Muskegon and State of Michigan, have invented certain new and useful Improvements in Hoisting Machinery, of which the following is a specification.

My invention relates to apparatus for operating the tongs or trip devices of hoisting machinery, and is more particularly intended for ingot tongs of traveling electric cranes, though applicable generally to hoisting machinery in which levers, catches, trips and tipping devices are employed in connection with tongs, buckets, scoops, ladles and other carriers.

In practice it is preferred to apply the invention to "double-drum" hoists, though it may also be used with the single drum. In either case the object sought is to accurately control the movements of the jaws of the tongs, the trip, or the tipping device regardless of the vertical position or elevation of the same.

In the accompanying drawings,—Figure 1 is a top plan view of the trolley of an electric bridge crane, having tongs, provided with my improvement; Fig. 2, an end or side elevation of the same; Fig. 3, an enlarged view of the tongs and their controlling mechanism; Figs. 4, 5, and 6, diagrammatic views of a reversing switch, which may be used in connection with the motor employed to actuate the tongs, trip, or tipping device; Figs. 7 and 8, diagrammatic views illustrating the application of the invention to pouring ladles, and to coal buckets or scoops; Fig. 9, a plan view of the trolley, showing the gearing connecting the hoist motor with the drums, and connecting the traverse motor with the truck wheels of the trolley; Fig. 10, a detached view of the automatic brake of the trip motor.

The particular type of hoist, style of motor, and kind of switch or reversing mechanism, are unimportant and may be varied at will, but in the following description I shall explain an embodiment of the invention which gives excellent results.

I will first describe the apparatus as applied to the control of tongs, such as used in handling steel ingots.

In the drawings I have represented a trolley A, adapted for use upon a traveling bridge crane, jib crane or the like, but it may stand as well for the framework of any form of hoist, movable or fixed.

B and C indicate two hoisting drums, and D the running block, represented as suspended by four parts of chain, E, Fig. 3, formed either by a single chain winding at each end upon one of the drums and carried over an intermediate pulley; or by two separate chains, each having one end made fast to the framework and the opposite end wound upon one or the other of the drums B, C, while the block D is suspended in the loops of said chains. As a consequence of this arrangement the movement of the block is at one half the speed of the peripheries of the drums.

F indicates the tongs, suspended from the block D by links G, or by short chains, attached to the arms or levers of the tongs above their joint or pivot *a*, as shown in Fig. 3, so that the weight of the load tends to close the tongs, their grip being directly proportionate to the weight of the load. In opening and closing, the jaws of the tongs pivot about the pin *a*, and since the links G are of constant length, the pivot *a* must be raised to open and lowered to close the tongs, while block D remains stationary, it being impracticable to raise and lower the block relatively to the tongs for this purpose. To thus raise and lower the pivot pin and operate the tongs, I provide an auxiliary running block H, which hangs in the loop or bight of a chain I, one end of which winds upon one of the hoisting drums, advisably grooved to receive it, as shown in Fig. 1, while the other end winds upon an auxiliary or operating drum J. The drum J remains stationary or is held against rotation at all times except when the tongs are being opened or closed, so that ordinarily it constitutes simply a fixed point of attachment for one end of chain I. In consequence of this arrangement chain I winds on and off the drum B at precisely the same rate as the chain or chains E wind on and off

the drums B and C, and hence the main and auxiliary blocks D and H remain normally a fixed distance from each other and rise and fall in unison.

K indicates a rod, connecting the auxiliary block H with the joint pin or pivot *a* of the tongs F, as shown in Fig. 3, a short length of chain K′ being preferably interposed between the rod and block to afford free play. A continuation of such chain K′ or other connection, might obviously be substituted, but the rod and chain connection is preferred because a continuous chain would be liable to kink if allowed to become slack, and in that event might interfere with the free upward movement necessary to actuation of the tongs. So long as the blocks D and H move alike or maintain a fixed relation to each other, the jaws of the tongs will likewise maintain their relative positions, and no movement toward or from each other will occur during the hoisting or lowering of a load. If, however, the auxiliary drum J be rotated in one or the other direction, the auxiliary block H and attached parts will be moved relatively to the main block D, and the tongs will be opened or closed accordingly as the pivot pin *a* of the tongs rises or falls. It will thus be seen that the auxiliary drum acting upon what would otherwise be the fixed end of the auxiliary chain, affords a means of opening and closing the tongs regardless of any variation in their elevation, which variation need not be considered by the operator if suitable means be provided for actuating and controlling the auxiliary drum.

The most convenient and satisfactory means for actuating the auxiliary drum, particularly in connection with an electric crane or hoist, is an electric motor; hence I provide frame or trolley A with an electric motor L, and gear or connect the same in any suitable manner to or with the drum J. The motor L is started, stopped, and reversed by a switch M, of any approved construction, a simple form of such device, together with the circuit connections, &c., being diagrammatically represented in Figs. 4, 5 and 6. In said figures, N indicates a generator, which may be a battery, a dynamo-electric generator, or any other source of electric energy, capable of supplying the requisite current. O indicates the commutator cylinder, P the armature, and Q Q the field coils of the motor L, and *b*, *c*, *d*, *e* and *f* indicate conductors leading from insulated contact plates *g* and *h*, of the switch M to the commutator brushes and fields of the motor, the generator N being introduced between conductors *e* and *f*. The insulated contacts *g*, *h*, are carried upon the periphery of a rotatable or oscillating cylinder or block R, which will be furnished with a suitable handle for moving it. When the switch is adjusted to the position indicated in Fig. 4, the motor L will run in one direction; when it is adjusted to the position indicated in Fig. 5 it will run in the reverse direction; and when set as in Fig. 6 no current will pass and the motor will remain at rest. No claim is made to this switch *per se*, nor do I restrict myself to its use.

In order promptly to arrest the opening and closing movement of the tongs at any point, whenever the switch lever is thrown to its central position, Fig. 6, and to prevent overrunning of the auxiliary drum J, a brake S, is introduced into the train between the motor L and drum J, as shown in Figs. 2 and 10. This brake is of essentially the same construction as that set forth in my Patent No. 461,052, dated October 13, 1891; that is to say, a brake band or shoe T, arranged to bear upon a hub T′ or shaft of the motor L, the drum J, or a hub or shaft of the train connecting them, is normally held against the same by a powerful spring U, but is withdrawn when the drum J is to be turned, by a lever V, actuated by the movable core W, of a solenoid or electro-magnet X, preferably arranged in series with the motor L, though it may be in shunt therewith.

As more plainly shown in Fig. 10, one end of the brake strap or band T is made fast to a bracket K or other fixed support, while the other end passes through the strong spring U, which bears at one end against a stationary disk *n* and at the other end against a movable disk *o*, which latter is made fast upon a prolongation of the brake strap or band T. The tendency of the spring is to press downward the disk *o*, the prolongation of the brake band sliding freely through disk *n*, and hence, if not prevented, the spring will draw the brake band firmly about hub T′ and prevent its rotation and consequently, rotation of auxiliary drum J and its motor L.

The solenoid X is in circuit with motor L and hence is energized when the motor current is passing and the motor is in operation, but is instantly de-energized when the motor current is interrupted.

To enable the solenoid to overcome the power of spring U without being unduly bulky, the lever V is provided, one end being fulcrumed on the framework A, and the other end jointed to or connected with the movable core of the solenoid X as shown in Fig. 2.

To reduce friction as far as practicable, the disk *o* is furnished with an antifriction roller on its under side, beneath which roller is arranged the cam face *m* of lever V. As the current passes to the motor L the solenoid becomes energized and draws its core inward, thereby lifting lever V and causing its cam *m* to elevate disk *o*, thereby compressing spring U and releasing or slackening brake band T. The instant that the current is switched off from the motor, the solenoid is likewise cut out and the brake at once stops rotation of the drum J and parts in train therewith.

No claim is made herein to the details of

construction of the brake, nor is its form essential to the present invention. As stated, it is immaterial what form or style of motor be employed to actuate the hoist, the invention herein set forth being equally applicable to all hoisting machinery whether actuated manually, or by steam or other power.

In practice I have found the invention peculiarly advantageous in connection with the hoisting mechanism of the trolleys of traveling-bridge electric cranes, and I have illustrated it in this relation.

To make clear the entire structure, I have shown in Fig. 9 the several electric motors used upon such a trolley when provided with the trip mechanism herein set forth. These comprise, in addition to the trip motor L, a hoist motor and a traverse motor, both of which are appropriately designated in Fig. 9. Motion is given from the hoist motor, through a pinion *p*, on its shaft or arbor, to a gear wheel *q* secured upon a shaft *r*, which shaft is in turn provided with a pinion *s* meshing with and imparting motion to a gear wheel *l* on the drum C. Shaft *r* also carries a gear wheel *u*, which meshes with a like gear on a second shaft *r'* which is furnished with a pinion *s'*, meshing with and imparting motion to a gear wheel *t'* on the drum B. Thus the two drums are caused to turn simultaneously and equally but in opposite directions. Motion is transmitted from the traverse motor to the truck wheel through any convenient train of gear, such for instance as that shown in Fig. 9.

It is manifest that any suitable cable may be substituted for the several chains represented in the drawings, the term cable being used in its generic sense and comprehending ropes and flexible bands generally. So too, the terms "trip" and "tripping device" are used comprehensively to include tongs-actuating, ladle-tipping, bucket-tripping and like devices; and the term "carrier" is used to include tongs, ladles, scoops, &c.

In Fig. 7, I have illustrated, diagrammatically, the application of the invention to ladles, such as are employed for pouring molten metal, like parts being lettered the same as in the preceding figures. In this embodiment of the invention I employ instead of rod K, the chain or flexible band K', which passes about a segmental projection *i* on the side of the ladle, concentric with the journals upon which said ladle is supported and turns, one end of the chain being made fast to the forward part of said projecting segment *i*. The journals are so located that the ladle naturally assumes and retains the vertical position indicated.

The operation and control of the ladle are the same as that of the tongs, already described. Obviously, the chain or band K' may connect in any convenient manner with the ladle, provided only that an upward strain upon the chain shall cause the ladle to tip.

Fig. 8 shows precisely the same arrangement of parts as Fig. 7, except that a bucket or scoop is substituted for the ladle, and that block H is connected with the locking bar or catch *j*, of said bucket, used to hold the same normally against tipping. Upon rotating auxiliary drum J, the catch bar is lifted and the bucket is made free to tip and to discharge its contents.

Having thus described my invention, what I claim is—

1. In combination with the hoisting drum, cable, running block, and tripping device of a hoisting apparatus, an auxiliary block connected with said tripping device, an auxiliary drum, a cable passing through the auxiliary block and having its ends arranged to wind upon the hoisting and auxiliary drums respectively, and means for rotating the auxiliary drum when required; whereby the blocks are caused to rise and fall together normally, but the auxiliary block may be raised independently to actuate the tripping device.

2. The combination substantially as set forth of hoisting drum B; cable E having one end fixed and the other wound upon said drum; running block D carried by said cable; carrier F carried by said block; auxiliary block H connected with and serving to actuate the trip of said carrier; auxiliary drum J; cable I passing through the block H and having its ends wound upon drum B and drum J respectively; and a motor connected with and serving to turn drum J.

3. In combination with the hoisting drum, cable, running block and carrier of a hoisting apparatus; an auxiliary block connected with the trip of said carrier and serving to actuate the same; an auxiliary drum; a cable passing through the auxiliary block and having its ends wound upon the respective drums; an electric motor connected with and serving to turn the auxiliary drum; and a switch controlling said motor; whereby it may be started, stopped, and reversed at will.

4. In combination with the hoisting drum, cable, running block and carrier of a hoisting apparatus; an auxiliary block connected with and serving to actuate the trip of said carrier; an auxiliary drum; a cable passing through the auxiliary block and having its ends wound upon the respective drums; a motor connected with and serving to turn the auxiliary drum; a brake serving to bring the auxiliary drum to rest promptly upon stopping the motor.

5. In combination with the hoisting drum, cable, running block and carrier of a hoisting apparatus; an auxiliary block connected with and serving to actuate the trip of said carrier; an auxiliary drum; a cable passing through the auxiliary block and having its ends wound upon the respective drums; an electric motor connected with and serving to turn the auxiliary drum; a brake normally acting to hold the motor and drum at rest; and an electro-magnet included in the circuit

which supplies the motor, and serving to withdraw the brake during the operation of the motor.

6. In combination with the hoisting drum, cable, running block and carrier of a hoisting apparatus; an auxiliary block connected with and serving to actuate the trip of said carrier; an auxiliary drum; a cable passing through the auxiliary block and having its ends wound upon the respective drums; an electric motor connected with and serving to turn the auxiliary drum; a brake normally acting to hold the motor and auxiliary drum at rest; an electro-magnet serving to withdraw the brake during the operation of the motor; and a switch serving to simultaneously throw the motor and brake magnet into or out of action.

In witness whereof I hereunto set my hand in the presence of two witnesses.

ALTON J. SHAW.

Witnesses:

WILLIAM W. DODGE,
WALTER S. DODGE.