(No Model.) 3 Sheets—Sheet 1.

L. PIETTE.

MACHINE FOR SORTING DISINTEGRATED WOOD, &c.

No. 425,341. Patented Apr. 8, 1890.

Fig. 1

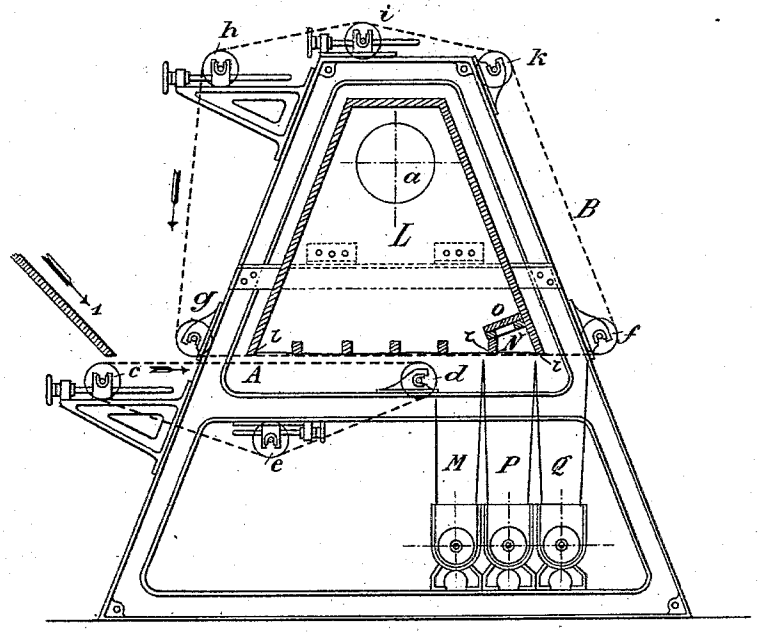

Fig. 2.

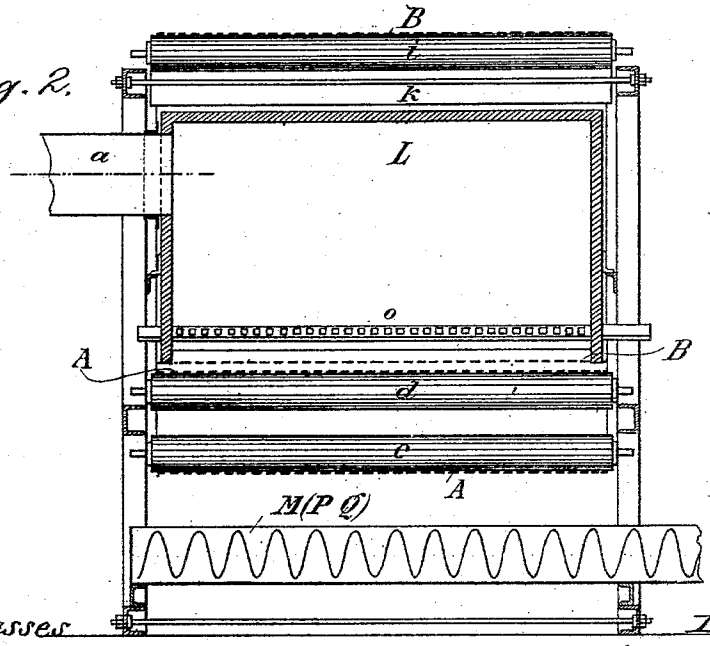

Witnesses
Thomas Durant
E. D. Smith

Inventor,
Ludwig Piette,
by Chunet & Chunet
his Attys.

(No Model.) 3 Sheets—Sheet 2.

L. PIETTE.

MACHINE FOR SORTING DISINTEGRATED WOOD, &c.

No. 425,341. Patented Apr. 8, 1890.

Fig. 3.

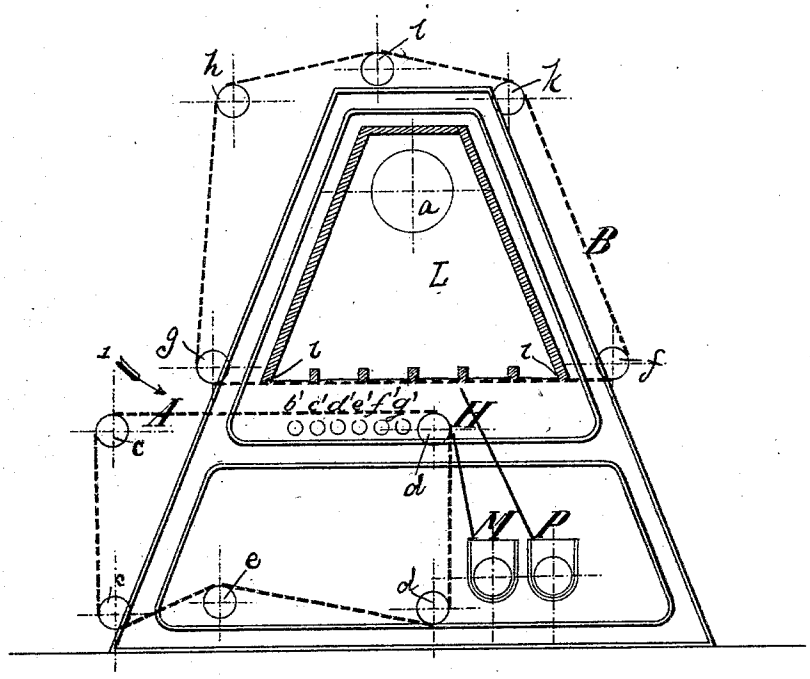

Witnesses

Thomas Durant

E. D. Smith.

Inventor

Ludwig Piette,

by Church & Church

his Attys

(No Model.) 3 Sheets—Sheet 3.

L. PIETTE.

MACHINE FOR SORTING DISINTEGRATED WOOD, &c.

No. 425,341. Patented Apr. 8, 1890.

Fig. 5.

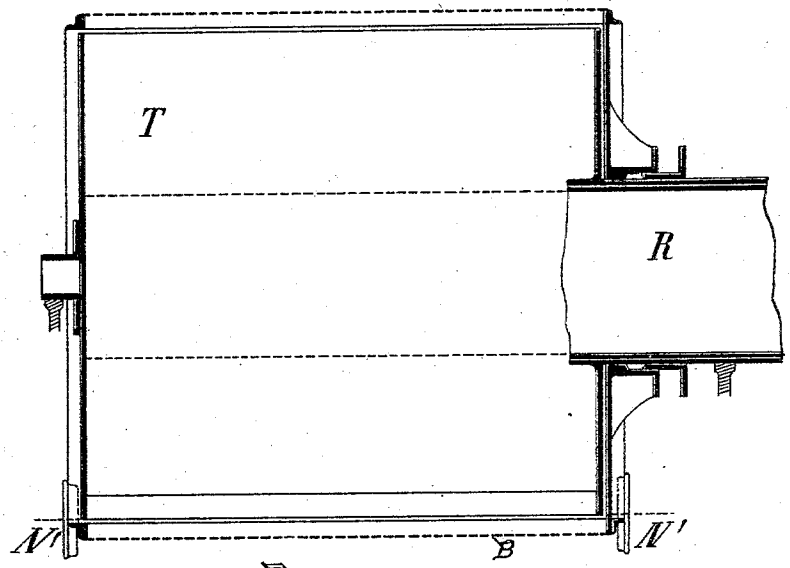

Fig. 4.

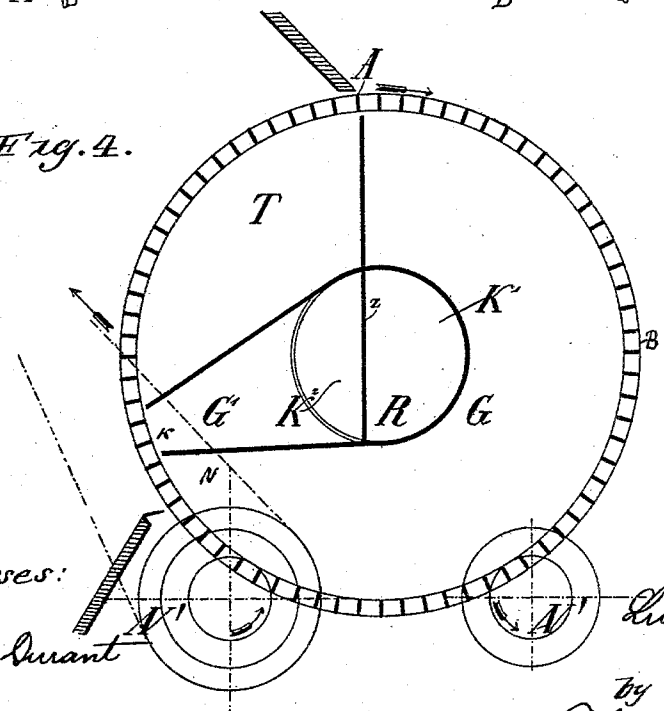

Witnesses:
Thomas Durant
E. D. Smith

Inventor
Ludwig Piette,
by Chas. H. Christ
his Attys

UNITED STATES PATENT OFFICE.

LUDWIG PIETTE, OF PILSEN, BOHEMIA, AUSTRIA-HUNGARY.

MACHINE FOR SORTING DISINTEGRATED WOOD, &c.

SPECIFICATION forming part of Letters Patent No. 425,341, dated April 8, 1890.

Application filed March 8, 1889. Serial No. 302,441. (No model.) Patented in England December 22, 1888, No. 18,753, and in Canada April 2, 1889, No. 31,025.

To all whom it may concern:

Be it known that I, LUDWIG PIETTE, paper manufacturer, a subject of the Emperor of Austria-Hungary, residing at Pilsen, Bohemia, in Austria-Hungary, have invented certain new and useful Improvements in Machines for Sorting Disintegrated Wood, &c., (for which I have applied for Letters Patent of Great Britain, No. 18,753, dated December 22, 1888, and secured Letters Patent of the Dominion of Canada, No. 31,025, dated April 2, 1889,) of which the following is a specification.

Up to the present time the knots of the wood used for the manufacture of cellulose were bored out or stamped out or sorted out by hand after the wood was disintegrated. This method is not only expensive, but also takes up a great amount of time, and is, moreover, dangerous for the workmen, because of the machines used.

The object of the present invention is to sort the knots from the other wood automatically by mechanical means.

In the accompanying drawings, Figure 1 represents a side view of one kind of machine. Fig. 2 represents a vertical section of the same. Fig. 3 represents a side view of a somewhat modified machine. Fig. 4 represents a further modification of the machine in drum form. Fig. 5 represents a vertical section of the same.

A machine for this purpose, Figs. 1, 2, and 3, consists, principally, of two endless sieves A B, running round rollers *c d e f g h i k*, journaled in a suitable frame. These sieves are arranged one above the other, and the lower part of the upper sieve passes near and horizontally over the horizontal upper part of the lower sieve. The rollers carrying the sieves are preferably of the same diameter and revolve with the same peripheral speed, so that the horizontal parts of the sieves move together at the same speed in the same direction.

Within the upper sieve B, directly over the lower or horizontal part thereof, is arranged a box or chamber L, open at the bottom, and with the lower edges *l* in proximity to the sieve, from which box the air is continuously drawn off at *a* by means of an exhauster or other suitable means, so that there is a permanent current of air through the openings of the horizontal lower part of the upper sieve.

The disintegrated wood is fed onto the upper or horizontal part of the lower sieve in the direction of the arrow I, and all the wood which is free from knotty parts is drawn up against the upper sieve by the current of air and remains there, while the heavier knotty parts remain on the lower sieve, travel with this, and fall into a receptacle M at the point where the lower sieve moves downward. The lighter parts of the wood are carried on with the upper sieve, which extends beyond the lower one, until they pass beyond the influence of the air-current, when they fall into receptacles placed underneath. On this end of the air-box is arranged a partition N, provided with openings O, which reduces the air-current, so that parts of wood adhering to the upper sieve, which still contain small parts of knots or were around the knots and are therefore somewhat heavier, will fall into a receptacle P, while the light parts, free from all traces of knots, still adhere to the sieve until they pass beyond the air-box, and then fall into the receptacle Q. In these receptacles are preferably placed screw conveyers, which convey the sorted disintegrated wood laterally out of the machine.

In a modified form of the machine, Fig. 3, the horizontal parts of the two sieves are farther apart and a series of blast-pipes *b′ c′ d′ e′ f′ g′* is arranged underneath the horizontal part of the lower sieve A, by means of which a current of air is driven through the lower sieve, which will throw the lighter parts of wood against the upper sieve while the heavier knotty parts remain on the lower sieve and fall at H into the receptacle M.

A further modification consists in using a sieve-drum T, Figs. 4 and 5. The air from the interior of this drum is continuously exhausted through one part of a divided tube R passing through the hollow axis of the drum, so that the lighter parts of wood fed onto the drum at A adhere to the drum, while the heavier knotty parts fall from it. The lighter parts adhere to the sieve until they arrive at a point *k* where a strong current of air is

blown through the sieve from a small chamber G′ in the interior of the drum, which current blows the light particles away from the sieve. The interior of the drum is thus divided into two chambers, a large one G, from which the air is exhausted, and a small one G′, through which a current of air is forced outward, the tube R being correspondingly divided in two parts K′ K^2 by the partition Z. N′N′ are rollers which carry the drum T. In operating this form of the apparatus the disintegrated wood is fed onto the top of the drum or cylindrical sieve, the knots and heavier particles dropping off before they reach the bottom, and the lighter, though somewhat knotty, portions drop off only after they reach the very bottom, where the force of gravity acts with the greatest power, and the very lightest particles are blown off by the blast, as before explained, thus effectually dividing the product into three different grades, as will be readily understood by those skilled in the art.

Having now particularly described and ascertained the nature of my said invention and in what manner the same is to be performed, I declare that what I claim is—

1. In an apparatus for sorting disintegrated fiber, the combination, with a traveling sieve, a suction-box on one side of said sieve and operating to attract the particles in opposition to the force of gravity, and means, substantially as described, for decreasing the effective action of the blast and permitting the force of gravity to gain the ascendency, whereby the particles of different specific gravity are removed in succession, substantially as described.

2. In an apparatus for sorting disintegrated wood, the combination, with a traveling sieve, of a suction-box located on one side of the same with partitions or compartments to reduce the suction as the sieve advances, and a series of receptacles located below the sieve to receive the different grades of material as they are released from the sieve successively.

3. In an apparatus for sorting disintegrated wood, the combination, with a traveling sieve, having a suction-box located on one side thereof, of a second traveling sieve located in proximity thereto and geared to travel in the same direction and at substantially the same speed, substantially as described.

4. In an apparatus for sorting disintegrated wood, the combination, with a traveling belt having a suction-box on one side thereof and extending in a substantially horizontal direction beyond said box, whereby the particles held on by the suction will drop off by reason of their own weight, of a second sieve located below and substantially parallel with said first-mentioned sieve, substantially as described.

5. In an apparatus for sorting disintegrated wood, the combination, with a traveling sieve, having one portion thereof arranged in a substantially horizontal plane, of a suction-box acting on a portion only of the upper surface of said sieve at one side of the horizontal portion, whereby the particles will drop by reason of their own weight after passing the suction-box, substantially as described.

6. In an apparatus for sorting disintegrated wood, the combination, with a traveling sieve, having one portion thereof arranged in a substantially horizontal plane, and a suction-box, substantially as described, of a partition or compartment above said horizontal portion for reducing the suction as the sieve advances, and a series of receptacles below said horizontal portion for receiving the material of different grades, as set forth.

7. In an apparatus for sorting disintegrated wood, the combination, with a traveling sieve, having one portion thereof arranged in a substantially horizontal plane, and a second sieve having a surface below and parallel with said horizontal portion, of a suction-box located above the upper sieve, and a series of compartments below said horizontal portion and beyond the lower sieve, substantially as described.

8. In an apparatus for separating disintegrated wood, the combination, with a traveling sieve and a suction-box acting to retain particles thereon, of a compartment located at the side of the box toward which the belt is traveling, and communicating with said box through a valved or reduced aperture, whereby the suction is partially cut off and the heavier particles allowed to drop, substantially as described.

In testimony whereof I have hereto set my hand in the presence of the two subscribing witnesses.

LUDWIG PIETTE.

Witnesses:
HENRY SCHMOLKA,
JOSEF VOSTREL.