United States Patent [19]

Banville

[11] **3,928,848**

[45] **Dec. 23, 1975**

[54] **SUPERVISORY CONTROL SYSTEM**

[76] Inventor: **Jules Eugene Banville,** 161 Hope St., Cumberland, R.I. 02908

[22] Filed: **May 28, 1974**

[21] Appl. No.: **473,358**

[52] **U.S. Cl.** ..... **340/409;** 340/310 R
[51] **Int. Cl.**[2] **G08B 23/00**
[58] **Field of Search** ..... 340/409, 310 R, 319 A, 340/255, 256, 177 UZ, 239

[56] **References Cited**

UNITED STATES PATENTS

3,448,447	6/1969	Tetherow	340/409 R
3,566,398	2/1971	Rowell	340/409 R
3,588,891	6/1971	Porter	340/409 R
3,604,262	9/1971	Craddock	340/239 R
3,614,761	10/1971	Rehm	340/239 R
3,711,854	1/1973	Reynolds	340/409 R
3,742,476	6/1973	Withrow	340/239 R

Primary Examiner—Harold I. Pitts
Attorney, Agent, or Firm—William Frederick Werner

[57] **ABSTRACT**

A supervisory control and self-powered indicating system is provided for controlling the operation of a remote electrically operated device from a control station and for indicating at the control station either the operability of the remote device or the absence of an alarm condition, in which a pair of face-to-face diodes are connected in series across the transmission lines at the remote location, with the mid-point between the diodes connected through a third diode and through a condition responsive switch to earth ground. The return connection through earth ground at the control station is made through a relay coil and back-to-back diodes connected in series across the transmission lines at the control station. Telemetry is provided through the opening and closing of the condition responsive switch, with the time that this switch remains in a given condition being monitored by the length of time the switch associated with the relay coil at the control station remains in this given condition. Alternatively, the condition responsive switch changes state in response to a predetermined alarm condition which is indicated by a change of state of the switch associated with the relay at the control station.

12 Claims, 2 Drawing Figures

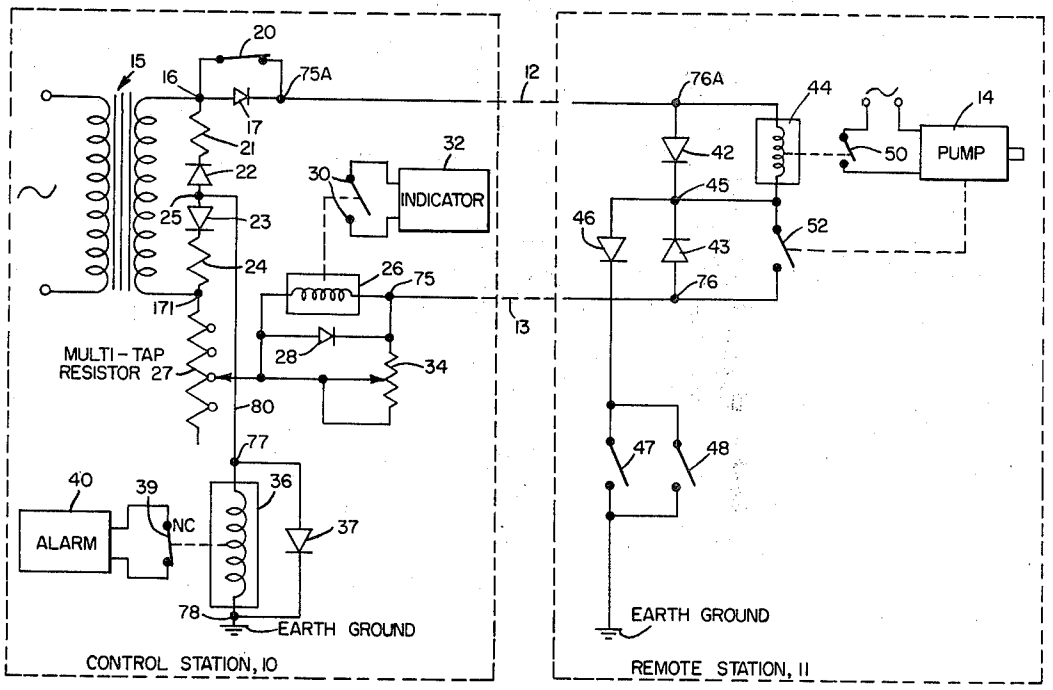

FIG. 1.

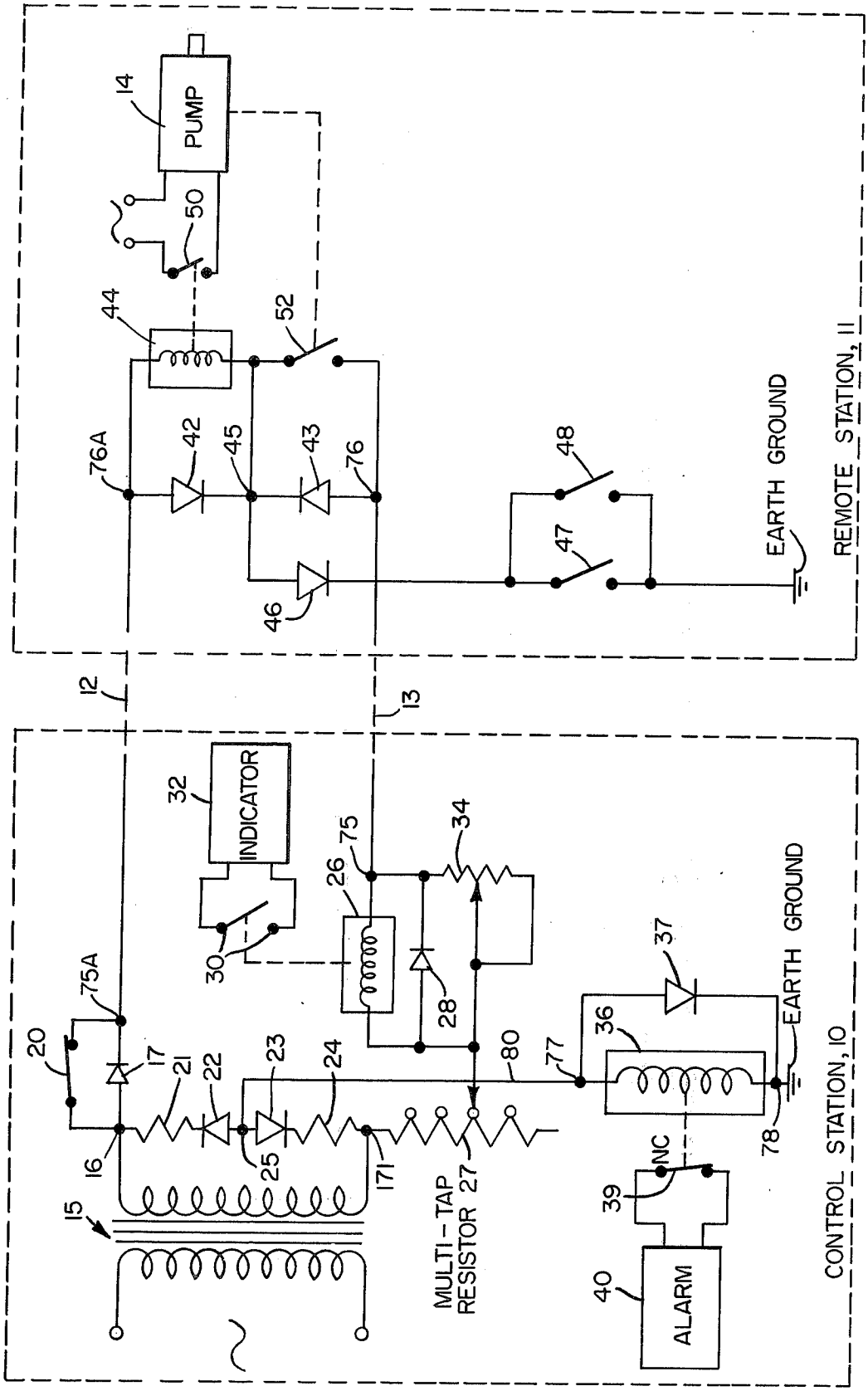
PUMP
14
50
44
52
76A
42
45
43
76
46
48
47
EARTH GROUND
REMOTE STATION, 11
12
13
INDICATOR
32
30
75
26
34
28
75A
20
17
21
22
23
24
16
25
171
15
MULTI-TAP
RESISTOR 27
80
77
36
37
EARTH GROUND
78
NC
39
40
ALARM
CONTROL STATION, 10

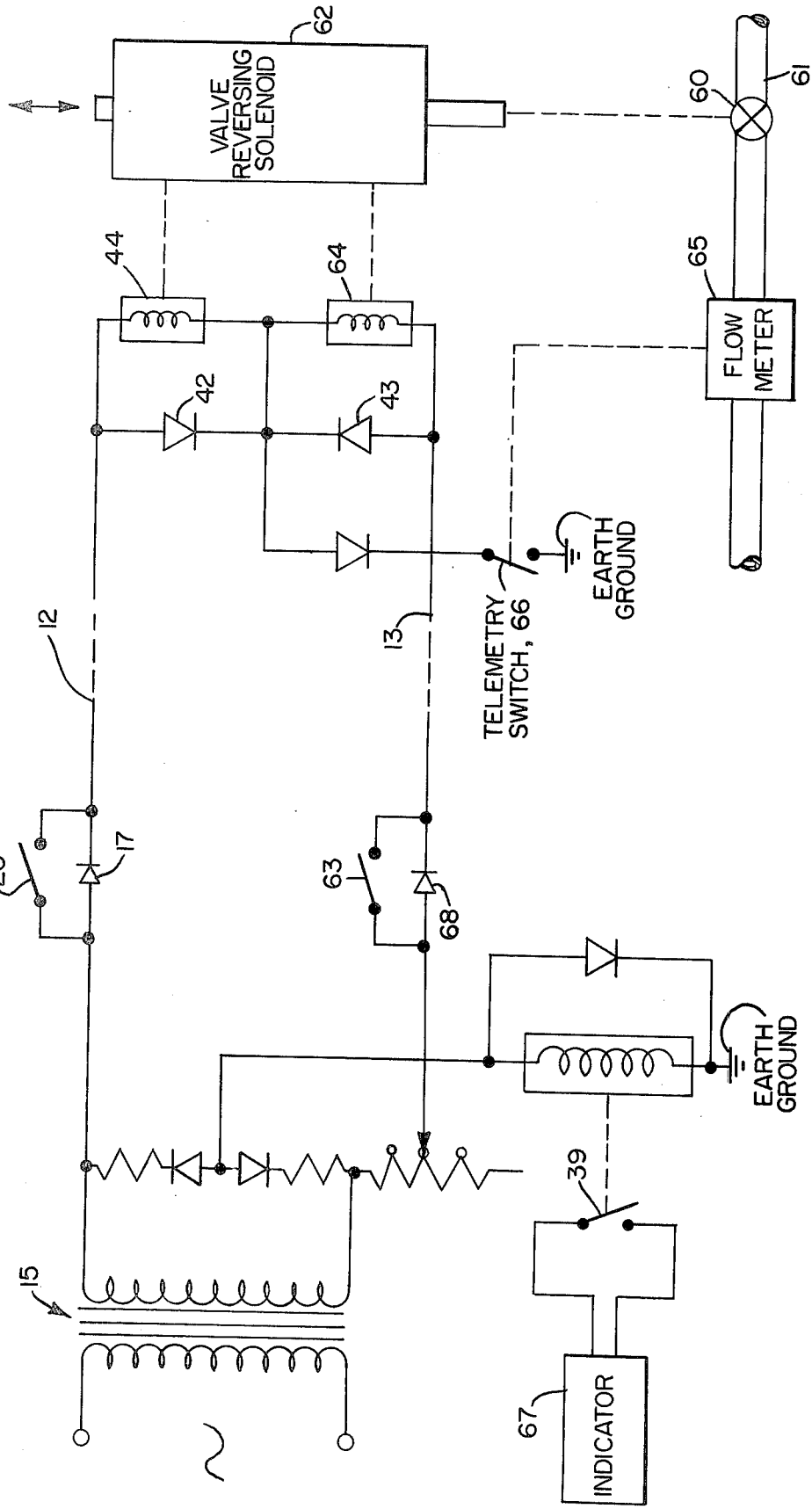
VALVE REVERSING SOLENOID
62
60
61
44
64
65
FLOW METER
42
43
EARTH GROUND
TELEMETRY SWITCH, 66
12
13
20
17
63
68
EARTH GROUND
39
15
67
INDICATOR

FIG. 2.

SUPERVISORY CONTROL SYSTEM

BACKGROUND OF THE INVENTION

This invention relates to apparatus for the supervisory control of a remote device and more particularly to provision of a self-powered indicating system utilizing the transmission lines between the remote and control stations, as a source of power for the indicating system, whereby control of a remote device and indication of its operation are indicated by signals transmitted back to the control station via earth ground and pairs of diodes across the transmission lines at the remote and control stations.

In the operation of, for instance, remote valving circuits there is a necessity for monitoring not only the state of the valve, but also to insure that no unauthorized entry has been made at the remote station. This is particularly true of a remote pumping station in which intruders may often either damage or inactivate the equipment unbeknownst to the personnel at the control station. Additionally, there is a need not only for an alarm system but also for a system which indicates the operability of the equipment at the remote station.

As described in U.S. Pat. No. 2,932,014, issued to J. C. Thoresen on Apr. 15, 1960, a supervisory system is illustrated in which a separate power supply at the remote location provides electrical current across a potentiometer, the wiper arm of which is mechanically connected to a valve such that the potential applied to the center of a choke coil across the power lines is proportional to the valve position. It is thus the magnitude of the potential delivered to the center of this choke coil when delivered back to the control station which provides for the indication of the state of the remote valve. It will be appreciated that depending on the distances between the control and remote stations this type of indicating system relys heavily on the stability of the remote power supply and the absence of change of any transmission line condition.

The problems of this type of indicating system are solved by the subject invention whose remote circuit derives its power directly from the transmission lines to the remote location and which in general provides an indication of the state of the remote device or the security of the remote station via the complete interruption or non-interruption of an earth ground connection at the remote location to the operative part of the remote indicating circuit.

This binary on/off operation of the subject circuit permits a binary on/off operation of the indicating or alarm circuit at the control station and thus is not amplitude sensitive, or sensitive to changes in the characteristics of the transmission lines between the control and remote stations.

Power for the remote station transmitting device is derived from two face-to-face diodes connected in series across the transmission lines inter-connecting the control and remote stations. The voltage at the mid-point of these diodes is applied through a further diode and an condition responsive switch to earth ground at the remote location. At the control station a back-to-back pair of diodes is connected in series through respective resistors across the same transmission line. The mid-point of these back-to-back diodes is connected through a relay coil to earth ground such that when the condition responsive switch at the remote location is closed, the relay coil at the control station is energized. In one embodiment, an alarm condition is indicated by an earth ground interruption at the remote location. This can be due to unauthorized access through a door or window at the remote station. Alternatively, any sensed condition at the remote station can be translated into the amount of time that the earth ground is connected to the remote circuit via the condition responsive switch. This switch closing time can be monitored at the control station and correlated with the sensed condition. Thus, for example, fluid flow at the remote station can be translated into how much time in a given time interval, the earth ground is connected and this time can be monitored at the control station. Moreover, a Powder-On indicator can be provided at the control station and in a further embodiment, a voltage compensation circuit is provided.

SUMMARY OF THE INVENTION

A self-powered supervisory control and indicating circuit is thus provided for indicating one of a variety of conditions at a remote location.

It is therefore an object of this invention to provide self-powered supervisory control and condition indicating apparatus at a remote location and control station in which earth ground is used as one of the conducting paths.

It is a further object of this invention to provide a supervisory and control circuit used with remote electrical apparatus in which both the operation of the apparatus is indicated at a control station as well as the absence of an intruder or any alarm condition.

Other features and advantages of the invention will appear from the ensuing description taken in conjunction with the accompanying drawings.

BRIEF DESCRIPTION OF THE DRAWINGS

FIG. 1 is a schematic diagram illustrating one embodiment of the present invention; and

FIG. 2 is a schematic diagram illustrating a second embodiment of the subject invention, indicating the use of the subject circuit for telemetry purposes.

DETAILED DESCRIPTION

Referring to FIG. **1**, a control station **10** is shown connected to a remote station **11** via transmission lines **12** and **13**. In one embodiment, remote station **11** may be a pump house remote from the control station **10** and includes a pump **14** or any other electronic or electromechanical device.

In order to actuate pump **14**, an alternating current signal is applied across an isolation transformer **15** having output terminals **16** and **171**. Transmission line **12** is connected to output terminal **16** through a blocking diode **17** which is shunted by a switch **20** connected in parallel with the diode **17**. Between terminal **16** and **171** are connected in series a resistor **21**, a diode **22**, a diode **23** and a resistor **24**, with the mid-point between the diodes being illustrated as a point **25**. It will be appreciated that in this configuration, diodes **22** and **23** are in a back-to-back configuration.

Transmission line **13** is connected through a relay coil **26** through multi-tap resistor **27** to output terminal **171** of the isolation transformer **15**. The purpose of the multi-tap resistor **27** is to provide for line impedence matching. Once the line impedence is known, a fixed resistor may be utilized in place of multi-tap resistor **27**. Relay coil **26** is shunted by a diode **28** to prevent ringing. Relay coil **26** controls a normally open set of

contacts **30** which activate an indicator **32** responsive to the continued energization of relay coil **26.** A potentiometer **34** is connected from transmission line **13** to terminal **171** through resistor **27** and the wiper arm of potentiometer **34** for purposes of adjusting the transmission line potential. Potentiometer **34** is adjusted to prevent minute or small amounts of voltage from falsely energizing relay coil **26,** since the transmisssion lines carrying the electrical current are often energized or influenced by the proximity of transformers or high-voltage power lines. Potentiometer **34** is used to prevent such induced voltages from energizing relay coil **26.** Since the total loop resistance varies, the setting of potentiometer **34** will vary with each installation.

A relay coil **36** is connected between earth ground and mid-point **25** with this relay coil being shunted by a diode **37,** to prevent ringing when the relay coil is de-energized. Relay coil **36** actuates a normally closed switch **39** into an open position so as to deactivate alarm **40** during normal operation of the subject system.

Turning now to the remote station, a pair of face-to-face diodes **42** and **43** are connected in series between transmission lines **12** and **13.** A relay coil **44** is connected between the transmission line **12** and a mid-point **45** between the face-to-face diodes **42, 43.** A further diode, diode **46,** is connected between mid-point **45** and earth ground through either switch **47** or switch **48.** Switch **47,** in one embodiment, is acutated by the opening of a door at the remote station such that switch **47** is opened with the opening of the door and is closed with the closing of the door. Opening of the door will sound an alarm at **40** because of the consequent de-energization of coil **36,** with the interruption of the earth ground connection path between the remote and control stations as will be described hereinafter. Switch **48** is a key-activated, pick-proof, switch which is manually closed with the turning of its key. This sets up a closed circuit with the door switch open **47** thus allowing the door to be opened by authorized personnel without setting off the alarm.

Relay coil **44** actutes normally open switch contact **50** to permit power to be delivered to pump **14.** Pump **14,** when in operation, mechanically closes switch **52** which connects relay **44** directly across lines **12** and **13.**

In operation, the a.c. circuit which includes relay coil **44** is open due to the blocking action of diode **17** for voltage of one polarity, and the shunting action of diode **42** prevents energization of coil **44** for voltages of the other polarity. Power from isolation transformer **15** is, however, provided across relay coil **44** when key switch **20** is first closed, thus unblocking diode **17.** Upon actuation of switch **20,** positive half cycles of current at terminal **171** are applied through diodes **28** and **43** to mid-point **45,** and then to relay coil **44** and back through diode **17,** still in a blocked state but now by-passed through closed switch **20,** pass through closed switch **20** to complete the energization circuit of relay coil **44.** This is turn actuates switch **50** into a closed position for supplying power to pump **14** or some other electromechanical device. When pump **14** is activated, switch **52** closes such that power from transmission line **13** is directly coupled to relay coil **26** during normal operation of the pump.

On the positive half cycle of alternating current from terminal **16** this positive going voltage is shunted by diode **42** to point **45** from whence it proceeds through diode **46** through either switch **47** or **48,** through earth ground to relay coil **36,** and through this relay coil to mid-point **25.** The potential at point **25** is delivered either through diode **22** and resistor **21** to terminal **16** of the isolation transformer or through diode **23** and resistor **24** to terminal **171.** This action opens the normally closed contacts **39** so that alarm **40** is inhibited.

It will be appreciated that upon actuation of pump **14,** relay coil **26** will be energized for causing indicator **32** to indicate normal operation of the system. Should an intruder cause switch **47** to be opened, relay coil **36** is de-energized and alarm **40** sounds. In one operative embodiment, the half-wave rectified voltage at point **45** at the remote station is at 75 volts while the voltage at point **25** at the control station is 4 volts. In this manner, the same transformer is utilized to provide both the power for relay coil **44** and the power for relay coil **36** and the power for relay coil **26.**

Referring to FIG. **2** in another embodiment, the subject system can be used for supervisory control of a valve **60** in a fluid transmission line **61** via a valve reversing solonoid **62.** The operation of this valve reversing solonoid is similar to that described in aforementioned U.S. Pat. No. 2,932,014. In this embodiment, in which reference characters for elements in FIG. **2** correspond are compared to like elements in FIG. **1,** an additional switch **63** is provided in line **13** with potentiometer **34,** diode **28,** relay coil **26,** contacts **30** and indicator **32** removed from the circuit.

Additionally, switch **52** of FIG. **1** is removed from the circuit and a relay coil **64** is provided for the actuation of the valve reversing solonoid in a direction opposite to that which accompanies the energizing of relay coil **44.** Additionally, a flow meter **65** is interposed in fluid transmission line **61** which repeatedly opens and closes a telemetry switch **66,** which replaces switches **47** and **48.** Switch **66** is opened and closed at a rate proportional to fluid flow in conduit **61.** Switch **39** tracks the opening and closing of switch **66** during normal operation. The control station is also provided with a cumulative time indicator **67** which records the amount of time during a predetermined time interval that switch **66** is closed. In its most usual form, indicator **67** may take the form of a conventional integrating device. Since switch **66** is closed for a time period proportional to the volumetric flow in conduit **61,** indicator **67** therefore indicates either the flow rate or indirectly the valve position. In this manner, the circuit of FIG. **2** functions as a telemetry circuit for indicating either valve position or fluid flow.

To further describe the operation of the circuit of FIG. **2,** switch **20** and **63** are connected in parallel with diodes **17** and **68** respectively. At the remote station, a pair of relay coils **44** and **64** are connected in parallel with respective diodes **42** and **43.** The relay coils may be of conventional type and are connected to solonoid **62** arranged in one condition to open valve **60** and in another condition to close valve **60.** Relay coil **44** and solonoid **62** thus form one telemetric receiver while relay coil **64** and solonoid **62** form another telemetric receiver.

When it is desired to open valve **60,** switch **20** is closed. Then in those half cycles of the alternating voltage in which a positive voltage is applied to transmission line **13,** assuming the diodes to be poled so as to pass current from left to right in the drawing, current will flow through diode **68,** through diode **43,** around diode **42** and through relay coil **44** and the closed contacts of switch **20.**

Relay coil **44** now being energized, its contacts (not shown) close to cause solonoid **62** to assume a position in which valve **60** is open.

In alternate half cycles in which the voltage applied to transmission line **13** is negative, no current will flow, since current cannot pass through diode **68** and the latter cannot be bypassed since switch **63** is open. Furthermore, relay coil **44** is now short circuited by diode **42** so that this relay would not be energized even if current could flow in these last mentioned alternate half cycles. In short, during the half cycles in which the voltage applied to transmission line **13** is negative, relay coil **44** is not energized; but during half cycles in which the voltage applied to the transmission line **13** is positive, relay coil **44** will be energized or de-energized depending solely whether the contacts of switch **20** are closed or open. Relay coil **44** should of course have sufficient shading as not to change its condition, or chatter during the interval between alternate half cycles of the alternating current while the switch is closed.

If it is desired to move valve **60** to its closed position, switch **63** is closed. Thereupon during those half cycles in which the voltage applied to transmission line **12** is positive, current flows through diodes **17** and **42**, around diode **43**, through relay coil **64**, through transmission line **13**, around diode **68**, and through the closed contacts of switch **63**.

Relay coil **64** now being energized, its contacts (not shown) are closed to cause the electrical solonoid to assume a position which will effectively close valve **60**. In the alternate half cycles in which the voltage applied to transmission line **12** is negative, no current will flow, even though switch **63** be held closed since current cannot pass through diode **17** and the latter cannot be bypassed since switch **20** is open. Furthermore, relay coil **64** is now short circuited by diode **43** so that this relay coil would not be energized even if current could flow in said alternate half cycles. Thus the operation of valve reversing solonoid **62** is controlled by the states of switches **20** or **63**. The status of valve **60** is monitored by flow meter **65** so that indicator **67** indicates a fully open valve during maximum flow through conduit **61** and minimal flow when valve **60** is closed.

Obviously, the telemetry switch **66** can be activated by any one of a variety of sensing systems such that a predetermined condition at the remote station can be monitored through the transmission lines. This system is not sensitive to voltage changes in that it is a time-dependent system as opposed to an amplitude dependent system as illustrated in the prior art. Additionally, as will be apparent, the solonoid **62** can be replaced with any device responsive to two different signals for performing the prescribed function. The diode arrangement is also beneficial in eliminating the necessity for expensive choke coils while at the same time providing the requisite operation of a supervisory system. Of course, the diodes may be replaced with any one of a number of conventional rectifying devices.

What is claimed is:

1. A supervisory control system for use between a control station **10** and a remote station **11** connected by a pair of transmission lines **12, 13** carrying an a.c. signal, comprising:

first rectifying means **42, 43** having an output terminal **45**, said first rectifying means being connected across said transmission lines **12, 13** at said remote station **11** for generating a rectified signal at said output terminal **45**;

an electromechanical device **44** at said remote station connected between one of said transmission lines **12** and said output terminal **45**;

second rectifying means **17** in said one transmission line **12** at said control station **10** for blocking positive-going signals from said remote station coming in on said one line **12**;

means **20** for rendering said second rectifying means unblocking;

condition responsive switch means **47, 48** at said remote station **11** for selectively connecting said output terminal **45** to earth ground; and

means at said control station **10**, including an earth ground connection **78** responsive to the selective connection and disconnection of said output terminal **45** to earth ground at the said remote station **11** for indicating the state of said condition responsive switch means **47, 48**.

2. The supervisory control system of claim **1** wherein said indicating means includes a relay coil, back-to-back diodes connected in series across said transmission lines at said control station, means for connecting the mid-point between said back-to-back diodes to one end of said relay coil and means for connecting the other end of said relay coil to earth ground.

3. The supervisory control system of claim **1** wherein said first rectifying means includes a pair of face-to-face diodes connected in series across said transmission lines at said remote station, the mid-point between said two diodes constituting said output terminal.

4. The supervisory control system of claim **3** wherein said condition responsive switch means includes a diode and a switch connected in series between said output terminal and earth ground.

5. The supervisory control system of claim **4** wherein said switch is opened responsively to a predetermined alarm condition.

6. The supervisory control system of claim **4** further including means at said remote station for sensing the magnitude of a predetermined condition and for closing said switch means for a time period over a predetermined time interval proportional to the magnitude of said predetermined condition, and wherein said indicating means includes means at said control station for indicating said time period.

7. The supervisory control system of claim **6** wherein said predetermined condition is fluid flow rate.

8. The supervisory control system of claim **1** and further including means responsive to current flow in said transmission lines for indicating the presence of said current flow.

9. The supervisory control system of claim **1** and further including an isolation transformer having a secondary winding connected across said transmission lines at said control station, and means for matching the impedance of said isolation transformer to the impedance of said transmission lines.

10. The supervisory control system of claim **9** further including back-to-back diodes connected across said secondary winding and a relay coil connected between the mid-point between said back-to-back diodes and earth ground.

11. A system for indicating at a control station an alarm condition existing at a remote location wherein said remote location and said control station are interconnected with a pair of transmission lines, comprising

face-to-face diodes connected across said transmission lines at said remote location; alarm condition responsive means at said remote location for connecting the mid-point between said face-to-face diodes to earth ground under normal operating conditions and for disconnecting said mid-point responsive to said alarm condition; back-to-back diodes connected across said transmission lines at said control station; and means connected between the mid-point between said back-to-back diodes and earth ground for indicating current flow between earth ground and said last mentioned mid-point.

12. A supervisory control system for use between a control station and a remote station connected by a pair of transmission lines carrying an a.c. signal, comprising:

first rectifying means having an output terminal, said first rectifying means being connected across said transmission lines at said remote station for generating a half-wave rectified signal at said output terminal;

an electromechanical device at said remote station connected between one of said transmission lines and said output terminal;

second rectifying means in said one transmission line at said control station for blocking positive-going signals from said remote station coming in on said one line;

means for rendering said second rectifying means unblocking;

condition responsive switch means at said remote station for selectively connecting said output terminal to earth ground; and

means at said control station for indicating the state of said condition responsive switch means, said first rectifying means including a pair of face-to-face diodes connected in series across said transmission lines at said remote station, the mid-point between said two diodes constituting said output terminal, and further including means connected between said output terminal and the other of said transmission lines for providing a conducting path around the diode therebetween in response to the energization of said electromagnetic device with the rendering of said second rectifying means unblocking.

* * * * *