United States Patent [19]

Schirneker

[11] **3,919,921**

[45] **Nov. 18, 1975**

[54] **HAND FIREARMS AND AMMUNITION THEREFOR**

[76] Inventor: **Hans-Ludwig Schirneker,** am Berg 396, A 6833 Klaus, Austria

[22] Filed: **Apr. 10, 1974**

[21] Appl. No.: **459,625**

Related U.S. Application Data

[62] Division of Ser. No. 138,978, April 30, 1971, Pat. No. 3,817,148.

[30] **Foreign Application Priority Data**

May 2, 1970 Germany 2021597
Jan. 7, 1971 Germany 2100434

[52] **U.S. Cl.** **89/132**
[51] **Int. Cl.**[2] **F41D 11/02;** F41D 11/10
[58] **Field of Search** ..... 42/72, 39.5; 89/33 MC, 89/129 B, 132

[56] **References Cited**

UNITED STATES PATENTS

1,174,282	3/1916	Richard	42/72
1,399,119	12/1921	Hodges	89/33 MC
1,484,163	2/1924	Vincon	89/129 B
2,865,126	12/1958	Dardick	42/39.5
2,986,073	5/1961	Godar	89/132
3,437,039	4/1969	Hawthorne	42/39.5
3,667,147	6/1972	Goldin et al.	89/33 MC

Primary Examiner—Samuel Feinberg
Assistant Examiner—C. T. Jordan
Attorney, Agent, or Firm—Donald D. Jeffery

[57] **ABSTRACT**

Hand firearms in which a guard is provided for the trigger, with the guard being cooperable with an adjustable stop which limits the displaceability of the guard as selected to optionally lock the trigger for individual, sporadic or continuous fire.

2 Claims, 31 Drawing Figures

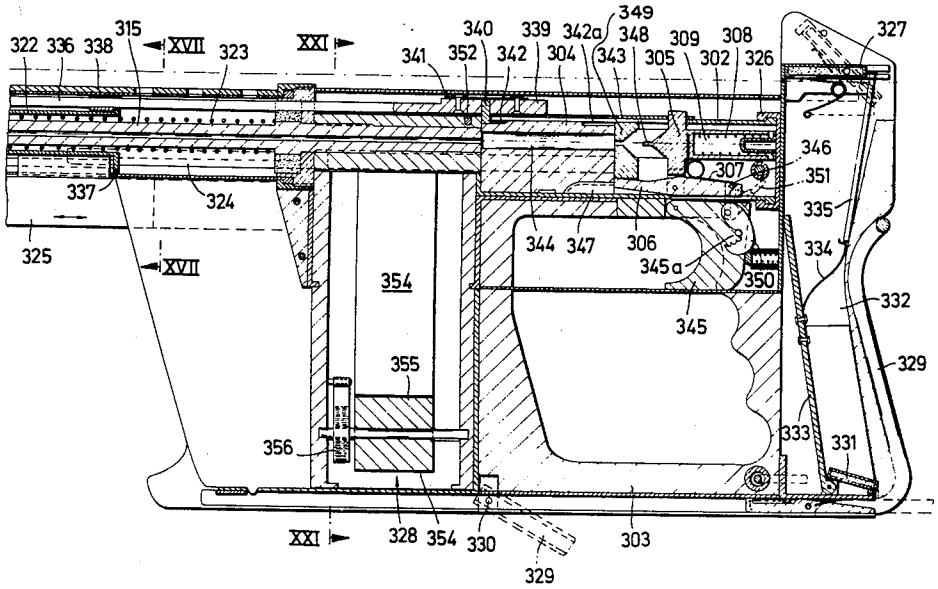

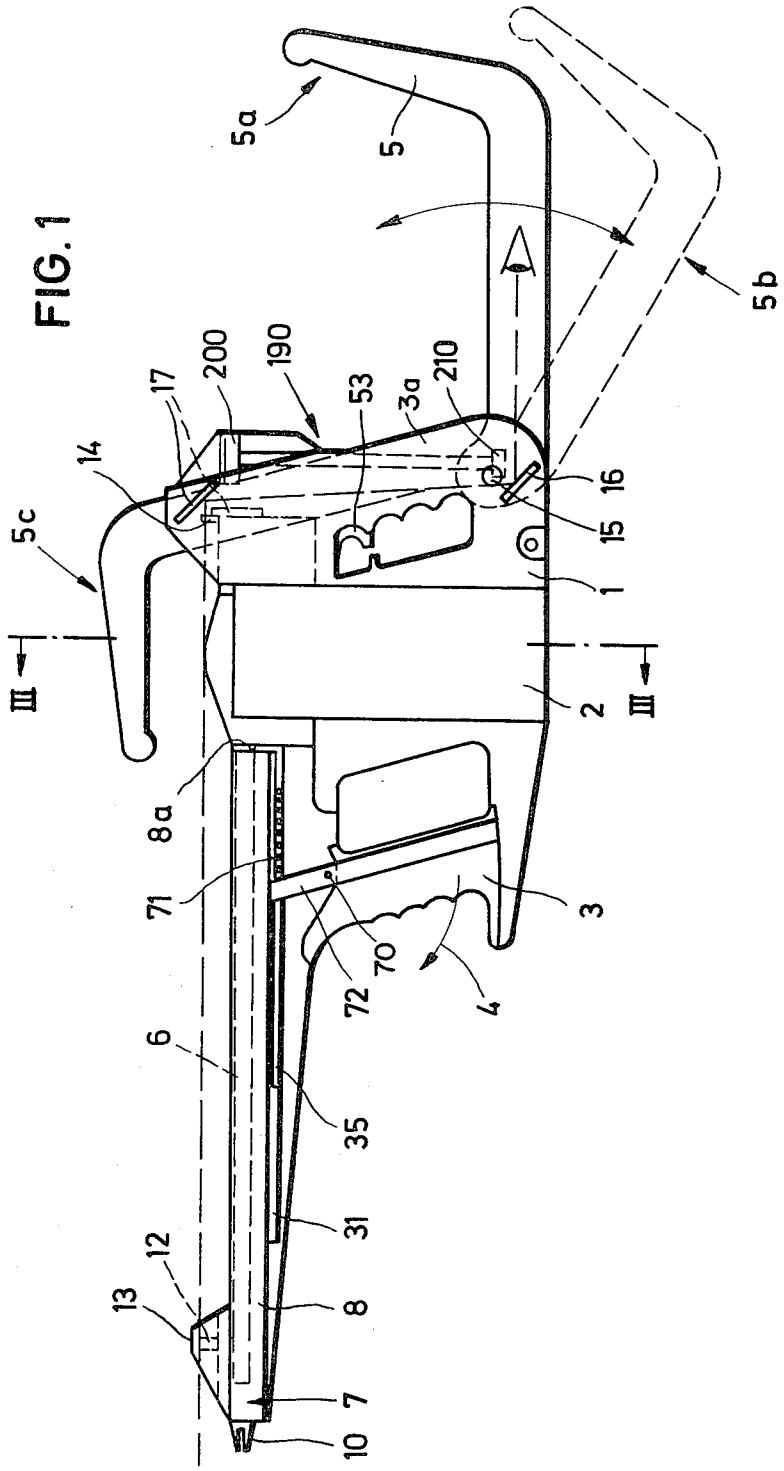
5a
5
5b
5c
III
III
14
17
200
190
53
3a
210
16
15
1
2
8a
71
70
72
4
3
6
35
31
8
7
10
12
13

FIG. 1

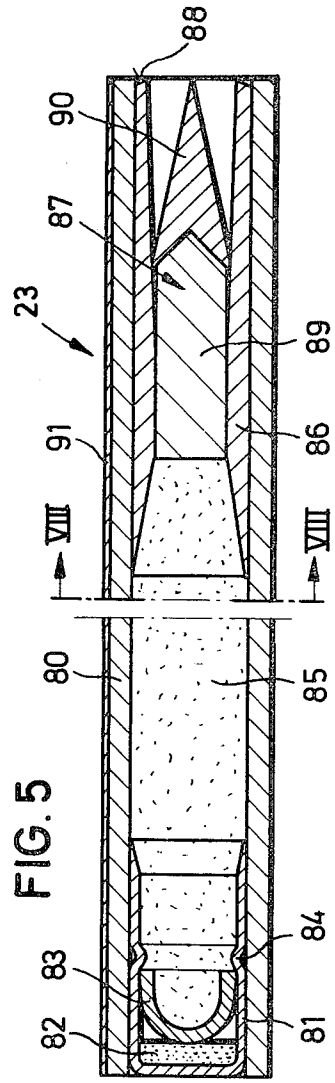

FIG. 5

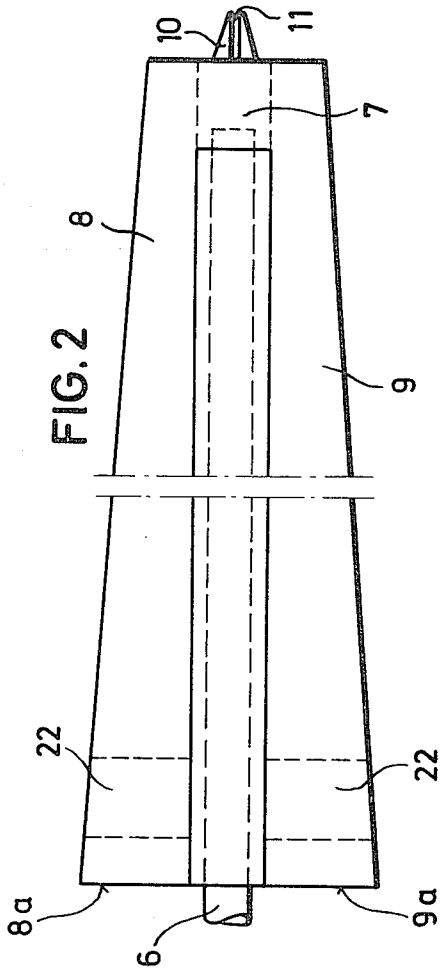

FIG. 2

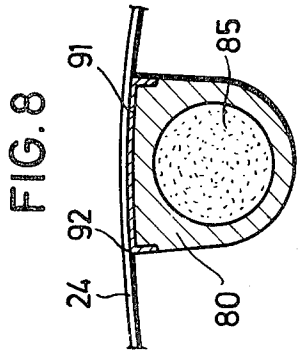

FIG. 8

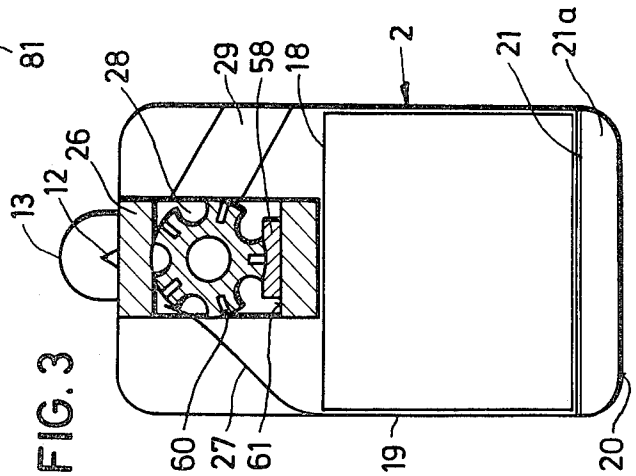

FIG. 3

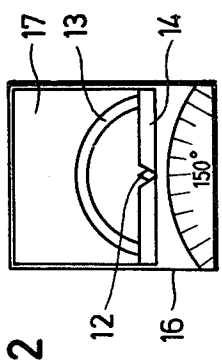

FIG. 12

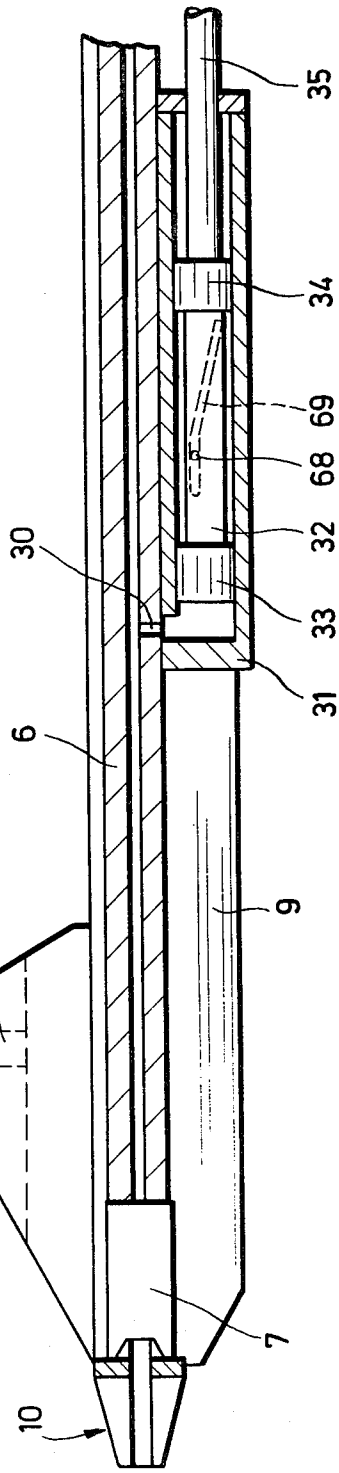

FIG. 4a

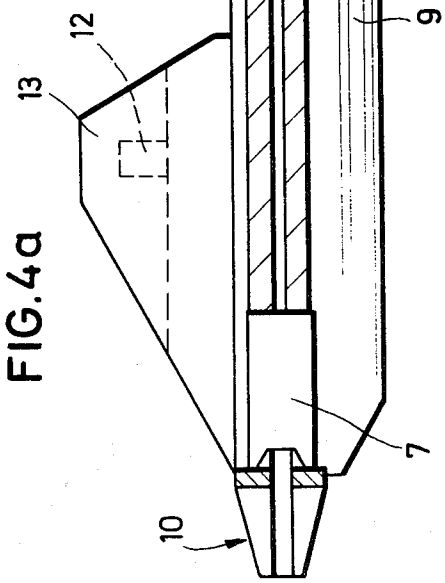

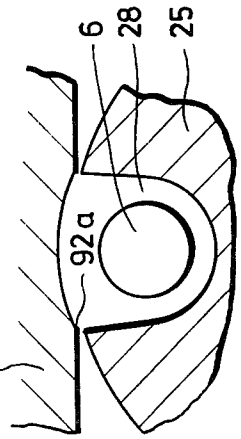

FIG. 13

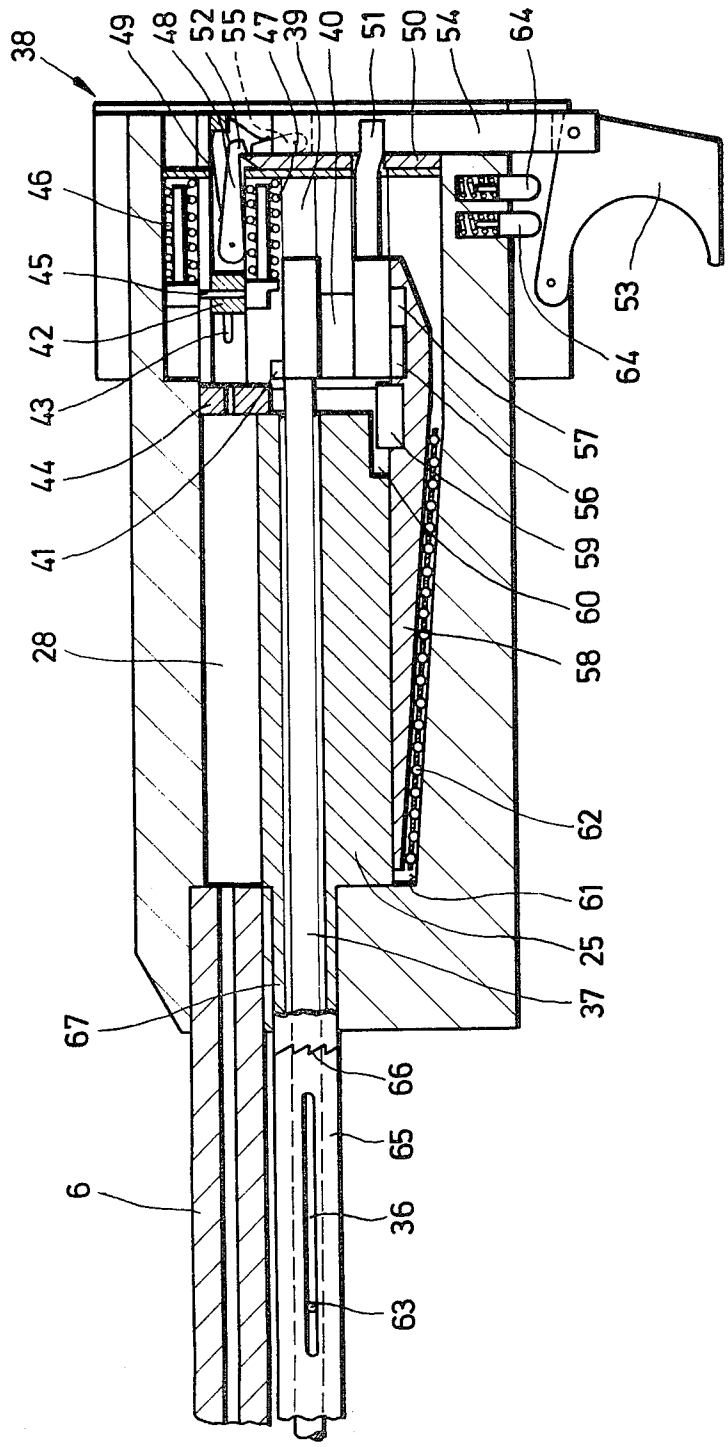
38
49
48
52
55
47
39
40
51
50
54
64
46
45
42
43
44
41
28
6
67
66
65
36
63
25
37
61
62
58
60
59
56
57
64
53

FIG. 4 b

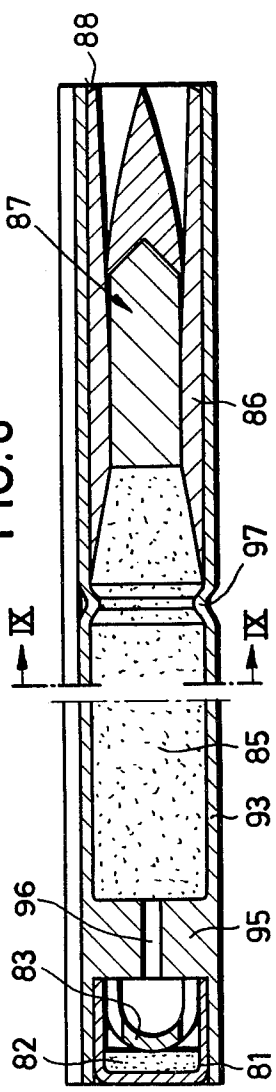

FIG. 6

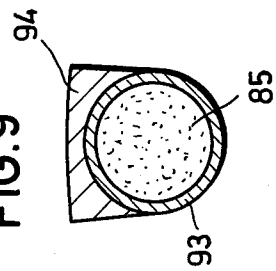

FIG. 9

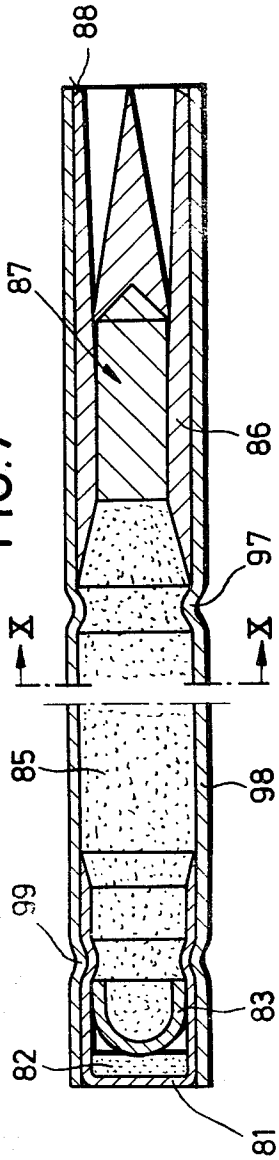

FIG. 7

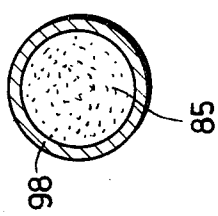

FIG. 10

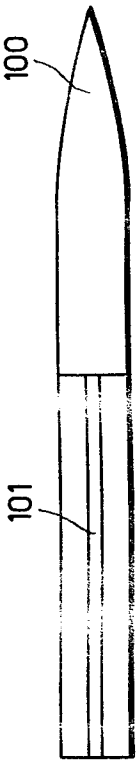

FIG. 11

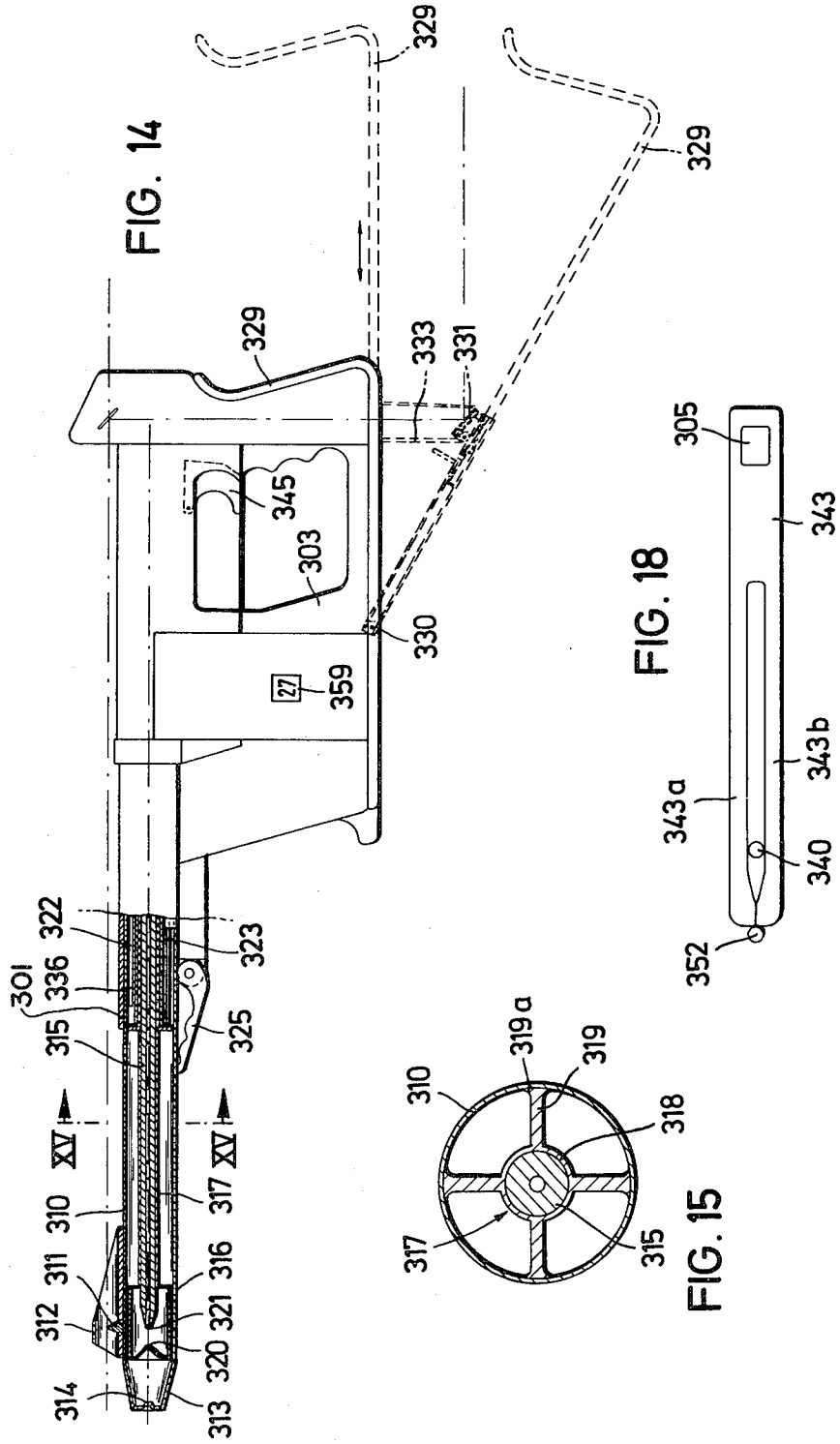

FIG. 14

FIG. 18

FIG. 15

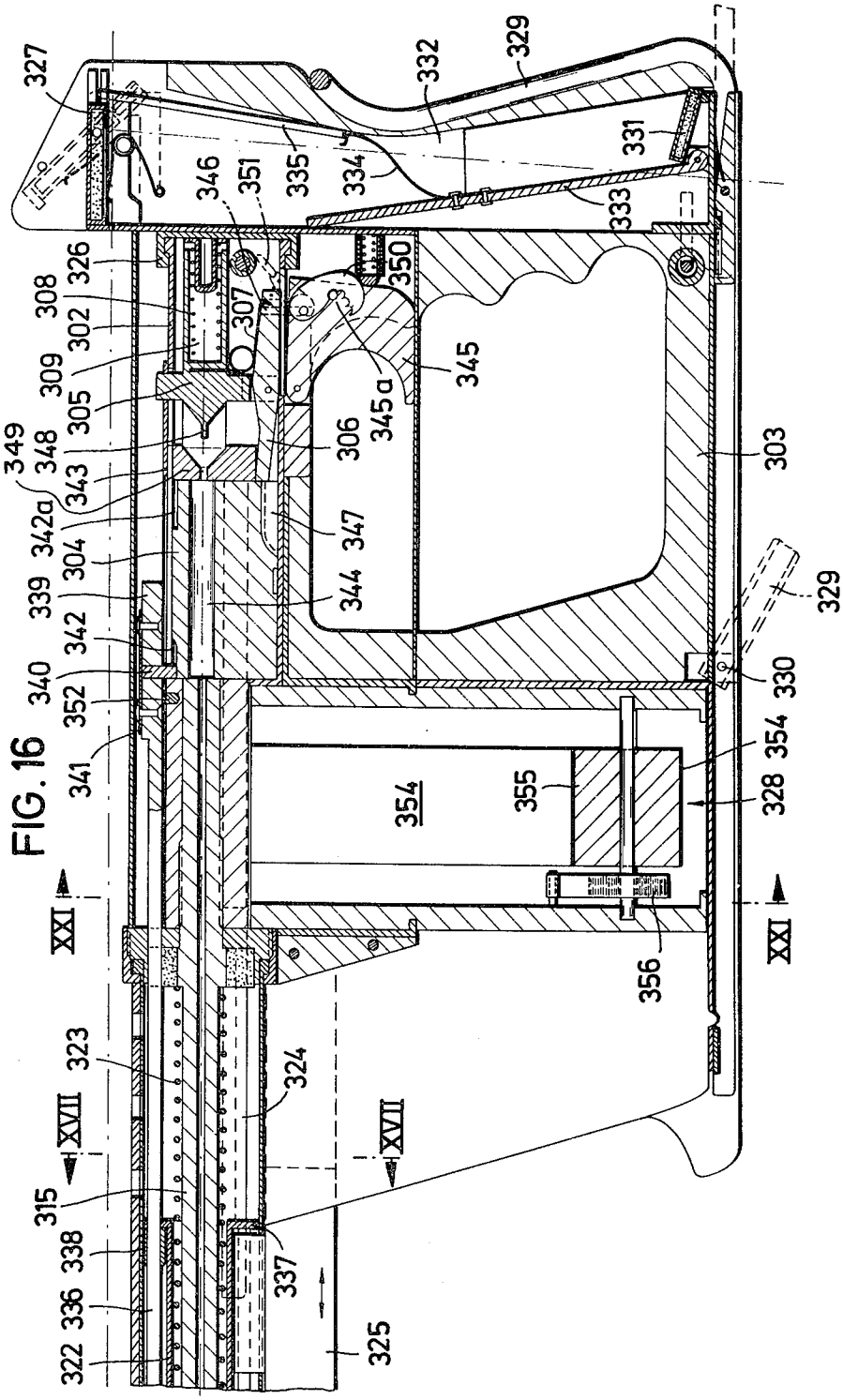
327
332
329
331
346
351
335
334
333
326
308
302
307
350
309
305
345
345a
349
348
306
303
343
342a
347
304
344
339
342
329
340
352
330
341
354
355
328
354
XXI
XXI
356
323
324
XVII
XVII
315
338
337
336
322
325

FIG. 16

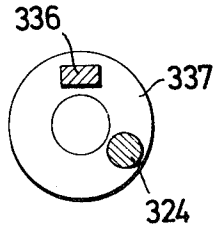

FIG. 17

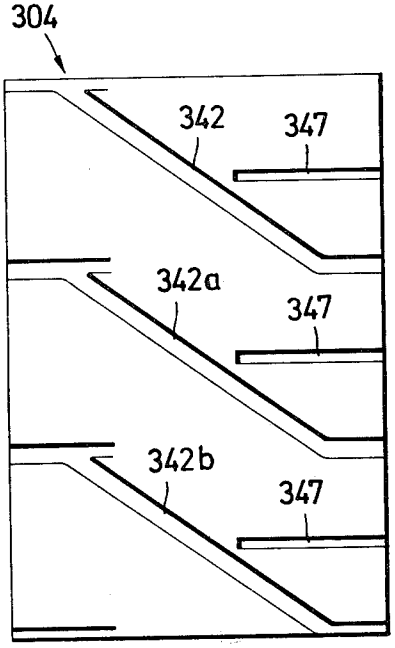

FIG. 19

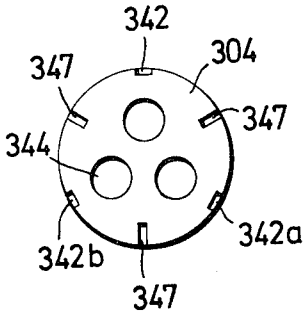

FIG. 20

FIG. 21

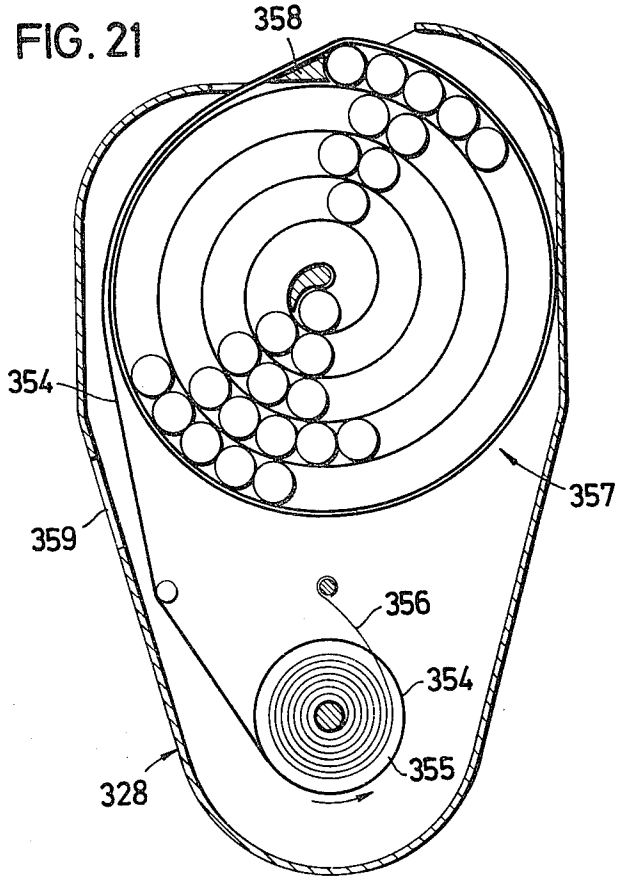

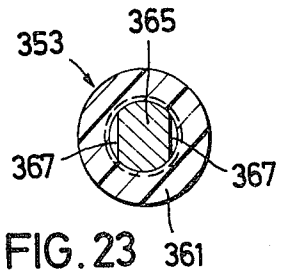

FIG. 23

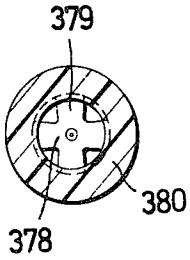

FIG. 25

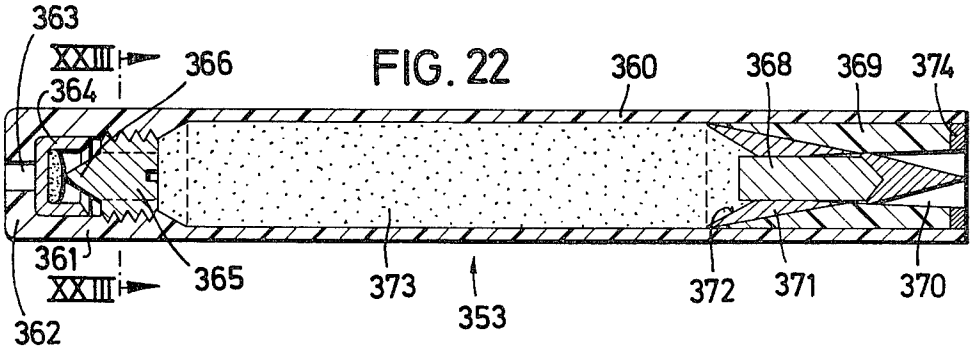

FIG. 22

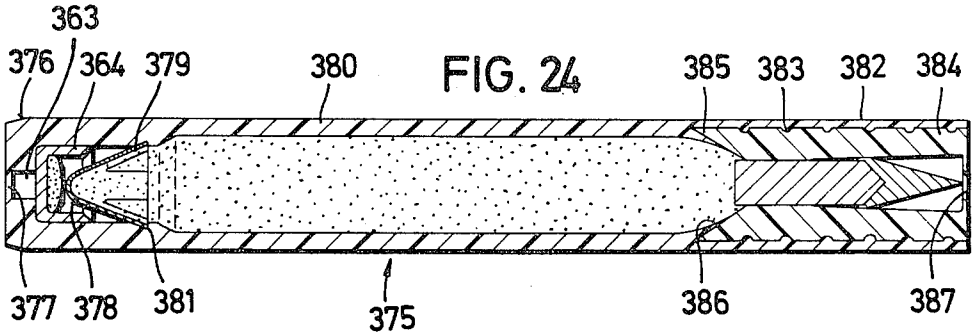

FIG. 24

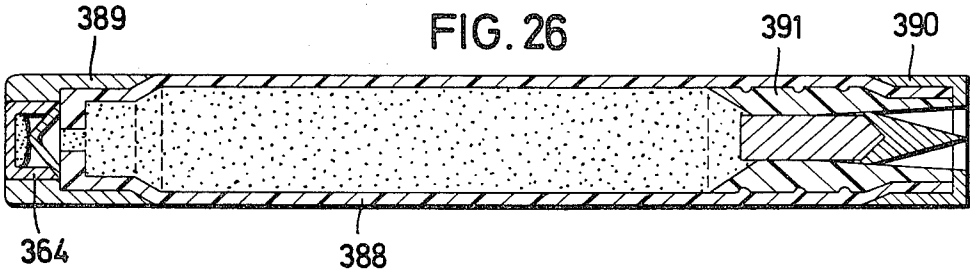

FIG. 26

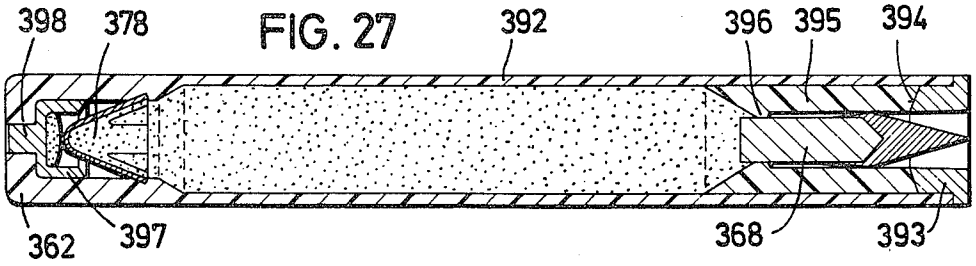

FIG. 27

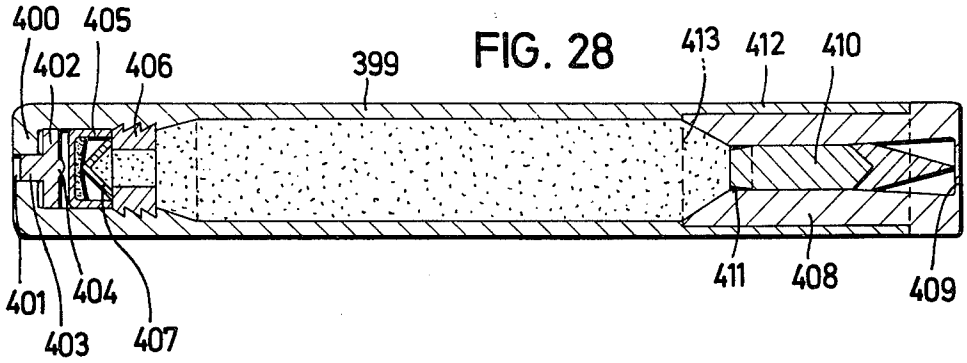

FIG. 28

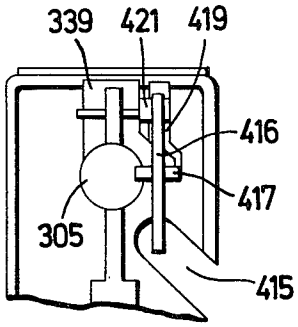

FIG. 29

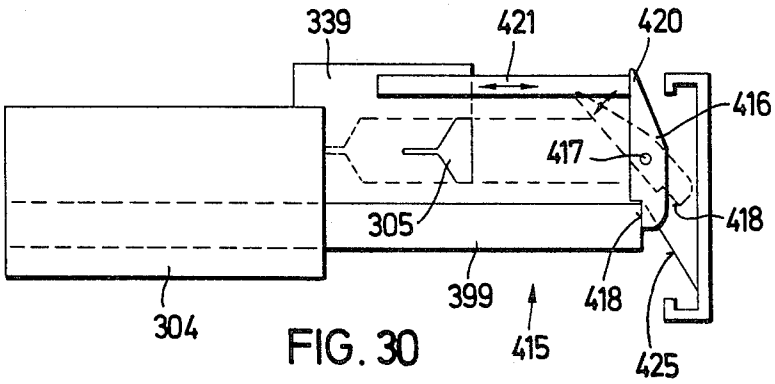

FIG. 30

HAND FIREARMS AND AMMUNITION THEREFOR

This is a division, of application Ser. No. 138,978, filed Apr. 30, 1971, now U.S. Pat. No. **3,817,148.**

This invention relates to a hand firearm with an optical sighting mechanism for either direct or indirect sighting and, accordingly, for direct of indirect firing, and the ammunition specially developed for this firearm.

One of the principle objects in the development and improvement of firearms of all kinds has always been to increase the firing range and to improve the firing accuracy, especially in cases where the principle of continuous or automatic firing is adopted in hand firearms. The tactics of combat are largely governed by improvements in this respect.

Originally, attempts were made to increase the firing range along with the accuracy of fire. Recently, however, efforts have been directed to adjusting the firing accuracy of hand firearms, especially rifles and assault rifles, to a distance of approximately 300 meters as the optimum, so that it is possible without any need to alter the sighting mechanism to shoot accurately up to this distance under equal conditions. Accordingly, it is not absolutely necessary in the case of more recent hand firearms for the sighting mechanism to be adjusted for different ranges. This simplifies the use of hand firearms, especially rifles.

Unfortunately, the disadvantage common to all hand firearms used in practice is that the marksman always has to keep his head higher than the barrel in order to be able to aim. For this reason, the marksman is relatively easy to see in battle and is thus prone to injury, especially because muzzle flash and pressure waves from his firearm betray his position to the enemy.

The object of the present invention is to provide a completely new hand firearm using specially developed ammunition with which it is possible to shoot accurately either only once, sporadically or continuously, even from a position of complete cover, without the position of the marksman being betrayed in any way by the shots.

Firing from a position of complete cover means that the body of the marksman from the waist upwards cannot lie behind the barrel so that the kick-backs which occur during firing do not have to be absorbed by the shoulder of the marksman. It has been found that, in order to shoot from a position of complete cover, it is necessary to use ammunition that can be fired with hardly any kick-back because absorption of the kick-back by moving different components of the hand firearms relative to one another is only incomplete and is only possible with considerable outlay in terms of design and, hence, expense.

In order to solve the problem referred to above, it is proposed in connection with a hand firearm of the kind referred to earlier on that this firearm should comprise a shoulder support which can be set at the required angle, in a downward direction at least, and in the stock a sighting mechanism with an optical redirecting means so that the weapon can be switched from direct to indirect sighting, and that the ammunition for the weapon should have an extremely small calibre preferably less than 4.5 mm in diameter, so that there is hardly any trace of kick-back. It is possible in this way to obtain a hand firearm with which it is possible to aim and shoot even when the eye of the marksman is not above the barrel carrying the normal notch and bead sight, without any danger of the firearm being displaced from the aiming direction adjusted by the kick-backs occurring during firing because the firearm can be fired both once and also continuously with hardly any kick-back.

It is known that the degree of kick-back is less violent, the lighter the weight of the bullets used. For this reason, the conventional steel-jacketed bullets have recently been made increasingly smaller. However, there are limits to the size of the bullets because although as light a weight as possible is required, a certain impact energy has to be applied tothe target which should be about 300 meters away from the point of fire. Added to this there is the fact that, in the event of any reduction in calibre, allowance has to be made for the fact, in the case of rotation-stabilised bullets, the diameter to length ratio should not be any greater than about 1:5 because otherwise there is no guarantee that the bullets will still follow the required ballistic trajectory. On the other hand, however, the bullets have to have a certain weight in order to generate a load per unit cross-section in the normally desired range of from 15 to 20 g/cm^2.

According to the invention, therefore, the ammunition required is based on the conventional steel-jacketed bullet with its lead core, modified to the extent that the bullets are made for example from a metal of high specific gravity, preferably from tungsten, and are provided with what is at best a needle-sharp tip of soft metal, for example copper. By making the main body of the bullet from substantially pure tungsten, a load per unit cross-section of from 15 to 20 g/cm^2, depending upon the length of the bullet, is obtained for a calibre of approximately 2.5 mm by virtue of the high specific gravity of 19.2. The relatively soft tip of copper or the like ensures that, on encountering a soft resistance, the tip is deflected spirally downwards, initiating the required tumble effect which is absolutely necessary to the effectiveness of small-calibre bullets. If, by contrast, a bullet of this kind comes into contact with a hard body, for example a steel body, the effect of the copper tip is that the bullet does not ricochet so easily and the hard tungsten core penetrates in to and right through the hard steel body.

However, the bullets can also be in the form of surface-stabilised arrow-like projectiles which optionally may also be additionally rotation-stabilised so that they can also be made from an inexpensive material such as steel. In this case, they do not necessarily have to be provided with a soft tip of another material, as in the case of tungsten bullets.

The cartridge cases which preferably consist of a plastics material have a uniform cross-section over the entire length of the cartridge so that they accommodate the bullet, the powder filling and the primer.

The weapon according to the invention is provided for example with a silencer whose inlet openings are situated laterally in front of the muzzle but which extends backwards parallel to the barrel so that the barrel only has to be negligibly lengthened by this silencer. Neither is the stability or handling of the proposed firearms adversely affected in any way by the silencer because the silencer does not displace the centre of gravity of the weapons frontwards to any appreciable extent.

In addition, according to the invention, the gas pressure generated during a firing of a catridge is used to repeat the firearm. To this end, some of the gas given off during firing is directed for example through a radial outlet opening situated in the barrel near its muzzle into a cylinder containing a piston displaceable against

spring pressure whose piston rod is coupled at one end to a continuous-advance mechanism for a cartridge drum rotatable in stages and, at its other end, to a cocking mechanism for the firing pin in such away that, after one shot has been fired, the firing pin is re-cocked and the cartridge drum rotated one step further so that there is a fresh cartridge in front of the barrel, in precise co-ordination with one another.

Instead of repeating by gas pressure, the repeating operation can also be carried out manually, for which purpose a handle for example is provided which can also be used to hold the weapon. In other words, manual repeating can be carried out without any time lag which is of considerable importance in combat if, for one reason or another, the automatic repeating mechanism should have failed or if the weapon has to be loaded for the first time following insertion of a new cartridge belt.

In one preferred embodiment of the invention, the hand firearm has a repeating roller which can accommodate several, preferably three cartridges in to which the cartridges with a uniform cross-section over their entire length are pushed in one and the same direction and from which they are ejected again after firing. Accordingly, the cartridges are not secured to a belt but are pushed individually in to a roller with a corresponding number of openings and are then brought into the firing position by the repeating roller, being carried round and finally ejected from the repeating roller after firing. The cartridges are preferably pushed backwards into the repeating roller from the front, and, after firing, are ejected rearwards from the repeating roller through the insertion of a fresh cartridge. The lock can be designed in such a way that there is always one case that has already been fired in the ejection duct in order to prevent dirt or like from penetrating into the repeating roller through the ejection opening.

The automatic repeating mechanism consists of a repeating piston which is displaceable by the gases given off during firing and on which there is arranged a plunger or a rod which inserts the cartridges individually in to the repeating roller from a magazine and ejects the fired cartridges one at a time from the opposite end of the repeating roller. The repeating roller is provided on its outer surface or outside with helically extending grooves in which a carrier pin axially displaceable by the repeating piston engages in order to turn the repeating roller one step further after each firing and hence following each insertion of a fresh cartridge, in other words the repeating roller can be rotated in steps with each loading operation. However, the repeating roller does not begin to rotate until a fresh cartridge has been completely inserted into it and a fired cartridge ejected from it, in other words the carrier pin which rotates the repeating roller is arranged with a delayed action on the repeating piston so that it only becomes active after the cartridge has been inserted into the repeating roller.

The repeating piston itself is accommodated in a cylinder housing which is also the housing of the silencer. This silencer is designed in such away that the gases given off during firing are unable to overtake the bullet fired from the barrel, but instead escape largely to the rear which has the advantage that these gases do not reduce the velocity of the fired bullet (high V_0), whilst on the other hand these gases can be used to actuate the repeating piston. The repeating piston is axially displaceable against the pressure of a compression spring, its working surface being adjustable in accordance with the normally occurring pressures of the gases given off during firing, for example by means of openings arranged in its end face whose cross-section can in some cases also be varied by a rotatable cover plate.

However, the repeating piston not only reloads and, thereafter, further rotates the repeating roller, it also cocks the firing pin. To this end, the rotational movements of the repeating roller are coordinated with the cocking movements of the firing pin.

In addition, the invention affords a simple method of safe-guarding the weapon as and when required and of switching it to on-off fire, sporadic fire or continuous fire.

Where the ammunition according to the invention consists of cartridges whose shells are cylindrical with a circular cross-section over the entire length and which are made of a material of limited resilience such as a plastics material, they can be stored and magazined easily without any danger of twisting. In addition, cartridges of this kind can readily be inserted into the repeating roller acting as the cartridge chamber because the cartridges do not have to be set in any particular angular position relative to the repeating roller, which is the case with a non-circular cross-section. Since the cartridge cases consist of a resilient material such as plastics, they are in no danger of jamming or seizing in the cartridge chamber of the repeating roller because the deformations that occur during firing are not permanent, in other words the cartridge case returns almost to its original form after firing which is not the case of example with brass or steel shells. Accordingly, the cartridge cases proposed in accordance with the invention can be ejected just as easily from the repeating roller.

The cartridges according to the invention are further distinguished by a novel arrangement of the percussion cap and of the anvil in the shell and by a novel mounting of the bullet in a sealing piston. All these components are co-ordinated with one another in such a way that extreme reliability is guaranteed despite minimal production costs.

Finally, the invention also provides a special magazine for the cartridges consisting essentially of a metal box accommodating a plurality of cartridges which are secured to a tape of stable fabric or which are wrapped in a tape of this kind or several parallel tapes. This wrap if arranged for example in such a way that the leading cartridge is pressed against a stop which holds it in front of the loading opening of the repeating roller so that this cartridge can be inserted from the magazine into the repeating roller. The cartridges remaining in the magazine are then pulled forward until the next cartridge comes into contact with the stop which, according to the invention, is achieved by virtue of the fact that the tape holding the cartridges is wound into a roller under spring pressure. The package accommodating the cartridges can also be mounted on a roller which is pivotally mounted in the magazine and contains a spring which tightens as the package is unwound, thus constantly maintaining throughout the tape a degree os tension sufficient to prevent the loosely wrapped cartridges from sailing. In addition, the cartridges situated in the outermost layer of the package are safely held therein by virtue of the fact that the tape is guided once again around the outside of the package in the absence of further cartridges so that the tape is doubled on the outside of the package.

The tape by which the cartridges are held in the package can also be provided with numbers or other markings showing how many cartridges are left in the magazine. These markings can be made visible through an opening in the side wall of the magazine.

The magazine according to the invention can accommodate a large number of cartridges, for example 400 cartridges, which can be quickly and conveniently inserted in one go so that the rifle can be loaded very quickly.

As already mentioned, the sighting mechanism can be switched in such a way that the target can be sighted either directly or indirectly. A conventional bead and diopter can be used for the direct sighting of a target. This diopter is formed by the notch and an upper covering therefore. For indirect sighting, an optical mirror system is provided in the grip portion of the stock by means of which it is possible to keep the eye substantially level with the lowest point of the hand firearms according to the invention. To this end, the upper deflecting mirror is adjustable so that it can be swung as required into a rest position or into a operative position. In the rest position, the back of the mirror holder can form part of the diopter. In order, however, to be able to look into the lower mirror, the shoulder support has to swung downwards so that it is situated at an angle to the axis of the barrel. In this position, any kick-backs occurring during firing can no longer be absorbed by the shoulder of the marksman so that the hand firearms have to fire with hardly any kick-back, as already explained above.

For orientation and in the interest of better combat strategy, the optical system can have incorporated in it a compass whose compass card or scale can be read either directly or through the optical deviating system so that, even in the case of indirect sighting, exact orientation by compass is possible. However, the compass needle must be situated in an area in which there are no parts of iron or other magnetizable materials. According to the invention, therefore, the stock and the cartridge chamber are made of a non-magnetizable material such as aluminum or plastics whilst the joints and connecting elements consist of brass for example. This has the further advantage that the hand firearms according to the invention are relatively light in weight.

A telescopic sight in the form of a scissor telescope can also be fitted into the grip portion of the stock instead of the mirror system.

Where the upper deflecting mirror measures 30 × 30 mm, visibility is in the range from 25.20 to 100 meters, in other words is considerably greater than in the case of a telescopic sight with lower magnification.

In addition, a receiver for electromagnetic waves and, optionally, a transmitter as well can be built into the cock or into the shoulder support so that it is possible for information to be transmitted to a marksman on the wireless principle or even for wireless conversations to be held between a marksman and his commander. This also considerably simplifies combat leadership.

Where the weapon according to the invention is used, a combat detail, especially one fighting on the defensive, is considerably superior to the enemy because it can fire from a position of complete cover without being visible and without being betrayed by muzzle blast, pressure waves and muzzle flash, even when it is under heavy enemy small arm fire, for example in the event of an attach by the enemy giving the advance details cover by direct machine gun fire.

Other features and advantages of the invention will become apparent from the following description of the drawings and from the claims.

Embodiments of a rifle built in accordance with the invention and of the ammunition suitable for use therein are diagrammatically illustrated in the accompanying drawings, wherein:

FIG. **1** is a side elevation of one embodiment of the rifle.

FIG. **2** is a plan view of the silencer fitted on to the barrel.

FIG. **3** is a cross-section on the line III—III of FIG. **1**.

FIGS. **4***a* and **4***b* are a longitudinal section through the rifle shown in FIG. **1** on a larger scale.

FIGS. **5, 6** and **7** are longitudinal sections through a few embodiments of the cartridge of scale larger than its true size.

FIGS. **8, 9** and **10** are cross-sections on the lines VIII—VIII, IX—IX and X—X, respectively, through the cartridges shown in FIGS. **5, 6** and **7**, respectively.

FIG. **11** shows a modified arrow-like bullet.

FIG. **12** is a plan view of the lower deflecting mirror of the indirect sighting mechanism with the image visible thereon.

FIG. **13** is a detail of FIG. **3** on a larger scale.

FIG. **14** is a partly sectional side elevation of a modified embodiment of the rifle.

FIG. **15** is a cross-section through the barrel and the housing surrounding it on the line XV—XV of FIG. **14** on a larger scale.

FIG. **16** is a longitudinal section through the rear part of the rifle shown in FIG. **14** on the same scale as FIG. **15**.

FIG. **17** is a cross-section on the line XVII—XVII of FIG. **16**.

FIG. **18** is a plan view of a spring U-bolt fixed to the firing pin as shown in FIG. **16** in what is substantially its natural size.

FIG. **19** is a developed projection of the repeating roller according to the invention shown in FIG. **16** in what is substantially its natural size.

FIG. **20** is an end view of the repeating roller.

FIG. **21** is a cross-section through the magazine of the rifle according to the invention on the line XXI—XXI of FIG. **16**.

FIG. **22** is a longitudinal section through another embodiment of a cartridge according to the invention on a scale considerably larger than its natural size.

FIG. **23** is a cross-section on the line XXIII—XXIII through the cartridge shown in FIG. **22**.

FIG. **24** is a longitudinal section similar to that of FIG. **22** through another embodiment of the cartridge.

FIG. **25** is a cross-section of the line XXV—XXV of FIG. **24**.

FIGS. **26** to **28** are longitudinal sections through another three embodiments of the cartridge.

FIG. **29** is a vertical section through the ejection end of the rifle.

FIG. **30** is a side elevation of the mechanism shown in FIG. **29**.

The rifle shown in its entirety in FIG. **1** comprises a housing-like stock **1** with a housing **2** for accommodating the lock with its repeating mechanism, a front handle **3** which can be pivoted forwards in the direction of an arrow **4** for loading purposes, and a fixed rear handle **3***a*. Linked to the rear end of the stock **1** there is an angular shoulder support **5** which can be locked in three positions so that, in the two lower positions **5***a*

and 5*b*, it acts as a support for the shoulder of a marksman whilst in its upper position 5*c*, it acts as a carrying handle. In addition, the rifle shown in FIG. 1 has the usual barrel 6 whose front end opens into a housing 7 from the side of which project two tubular, rearwardly extending silencers 8 and 9 which are open at their rear ends 8*a* and 9*a*, respectively. At the front end of the housing 7, in an extension of the barrel 6, there is an ejection nozzle 10 with grooves 11 machined crosswise in it so that it is impossible for any particles of dirt to settle in this ejection nozzle. In addition, a bead 12 is arranged in a sight tube 13 on the housing 7, whilst an associated notch 14 is situated at the rear end of the stock 1.

The stock and the components associated with it is made of aluminum and partly of plastics as well so that the weapon according to the invention is relatively light, weighing only 2 to 3 kg for example.

Following the pivot 15 of the shoulder support 5 situated at the lower and rear end of the stock 1, there is arranged in the stock 1 a fixed optical deflecting mirror 16 to which corresponds an adjustable mirror 17 arranged at the upper rear end of the stock 1. When the two mirrors 16 and 17 are in the position shown in FIG. 1, the marksman is able to take aim through this optical system using the notch and bead when his eye is substantially level with the mirror 16, i.e. considerably lower than the barrel 6, so that the marksman is able to shoot with the rifle without having to lift his head above the barrel 6, in other words his head can be completely covered in cases where it is desired to shoot accurately with the rifle according to the invention over a cover. If, by contrast, it is desired to take aim directly using the notch 14 and the bead 12, the adjustable mirror 17 is displaced into the vertical position shown in chain lines in front of and below the notch. In this position, an iron bolt arranged in front of and above the mirror 17 rests on the notch 14 so that the notch then acts as a diopter.

As shown particularly clearly in FIG. 3, the housing 2 projects laterally beyond the barrel and can accommodate a cartridge box 18 acting as magazine in which a cartridge belt described in detail further below is situated. One of the side walls 19 of the housing 2 is designed to be opened about a hinge 20 in order to change the cartridge box 18, an intermediate plate 21 on to which the cartridge box 18 is placed being provided in the housing 2. Beneath this intermediate plate 21, there is a recess 21*a* in the housing 2 which can be used for example to accommodate cleaning materials.

The housing 2 is not only used to accommodate the ammunition, but also has the advantage that the marksman, when taking aim directly with the notch and bead, only over sees the front end of the barrel or rifle with one eye, in other words the other eye does not have to be used for correct aiming, something which many people find difficult. When taking aim indirectly through the deflecting mirrors 16 and 17, the marksman can in any case only look into this optical deflectiing system with one eye so that in case too there is no need for the other eye to be used.

In addition, a compass 190 is fitted on to the rear end of the stock 1. Its upper end 200 which carried the scale or compass card is situated immediately beneath the inclined upper deflecting mirror 17 so that, in the case of indirect aiming through the deflecting mirrors 16 and 17, the compass position can be directly read off. However, even in the case of direct aiming or even in cases where no aim at all is taken, the compass card or scale can be read off by directly looking downwards on to it. The compass needle itself is situated at the lower end 210 of this compass 190 in a small housing provided there which is remote from any magnetizable parts of the rifle according to the invention.

If desired, a minature wireless receiver and/or miniature wirelss transmittor can be accommodated in the pivotal shoulder support 5, so that it is possible for instructions or orders to be transmitted to the marksman, even over considerable distances, in such a way that he will hear them even in cases where battle noise makes it impossible for commands to be given orally over relatively long distances or in cases where, for other reasons, it is desirable for orders to be given in the absence of noise and movement out in the open.

Provision of the compass in conjunction with a wireless order transmission facility allows completely new tactics to be adopted because neither the giver nor the receiver of the commands has to leave their cover for the effective direction of combat. For example, the marksman can receive a radio message from his group commander that an enemy has been seen and is to be fought in the direction of, for example 212° at a distance of approximately 150 meters.

In order that the marksman does not betray his position especially when aiming and shooting from a position of complete cover, through a movement of surrounding grass or similar camouflage produced by a pressure wave eminating from the barrel 6, by muzzle flash and by noise, the barrel 6 terminates in the housing 7 which is adjoined laterally by the tubular silencers 8 and 9 which extend rearwards adjacent the barrel 6 and which are open at their rear ends 8*a* and 9*a* but which, just before these ends, contain a wool-like or other packing 22 which guarantees the required degree of silencing in conjunction with the relatively long pressure-equalising chambers of the silencers 8 and 9. Since the gases issuing from the end of the barrel 6 can directly expand on both sides into the silencers 8 and 9, no muzzle flash, pressure waves or even muzzle noise emerges from the housing 7. The packings situated at the rear end of the tubular silencers 8 and 9 can consist of glass wool, wool, asbestos fibres or a similar material whose structure prevents the pressure waves generated during firing from directly issuing outwards undamped.

The cartridges 23 accommodated in the cartridge box 18 are secured at a certain distance from one another to a belt 24 consisting of a woven fabric for example, the arrangement being such that one cartridge 18 can accommodate for example one belt with 400 cartridges as the packaging and supply container. It is preferably in the form of a one-way box which is only opened by the marksman just before use and is thrown away after the cartridge belt accommodated in it has been fired.

The cartridges 23 pass from the cartridge box 18 in to a cartridge roller 25 which can be advanced in steps and which is rotatably mounted in a fork 26 adjoining the barrel 6. Arranged on the inside of the hinged side wall 19 of the housing 2 there is a leaf spring 27 or the like which bears from one side against the cartridge roller 25 and, in doing so, forces the following cartridges one by one into the uppermost empty groove 28 of the cartridge roller. These grooves 28 have a cross-section identical with that of the cartridges 23.

The cartridge roller 25 brings the individual cartridges 23 from the cartridge box 18 into a position

from which they are situated in front of the rear end of the barrel **6**, and holds them in the firing position, i.e. for firing purposes the cartridges do not have to be inserted into the barrel **6** or into an extension thereof, thus increasing the rapidity of firing and simplifying the lock mechansim.

On that side of the housing **2** opposite the side wall **19** to be opened, the cartridge roller **25** is adjoined for example by an ejection duct **29** for fired cartridges.

The rifle according to the invention can be loaded by pivoting the handle **3** in the direction of the arrow **4**, although it is preferably loaded with the assistance of the gases given off when a shot is fired. To this end, the barrel **6** is provided near its front end with a radial bore **30** which opens into a cylinder **31** arranged below the barrel **6**. This cylinder **31** contains a piston **32** axially displaceable against spring pressure with two guide rings surfaces **33** and **34**. The piston rod **35** is guided rearwards out of the cylinder **31** and is used to re-cock the lock of the weapon after a shot has been fired and to rotate the cartridge roller **25** one step further so that a new cartridge arrives in front of the barrel **6**.

The piston rod **35** is partly hollow and provided with an elongated hole **36**. A control rod **37** which, at its rear end, carries a slide **40** displaceable in guide grooves **39** in the lock **38**, projects into the piston rod **35**. This slide **40** has an upper carrier pin **41** which is designed to entrain rearwards with clearance a piston **42** carrying at its front end the firing pin **43** which can break through a wall **44** situated at the rear end of the cartridge roller **25** or through a hole provided therein. The piston **42** of the firing pin is designed to be places under tension through two compression springs **46** and **47** arranged above and below it and permanently connected to it through a pin **45**, so that when the piston **42** is released the firing pin **43** rushes forward with great energy without tilting and fires a fresh cartridge.

A latch **48** is so mounted in the piston **42** as to be pivotal against the action of a leaf spring **49**. In the lowermost position of the piston **42** this latch **48** engages over the blade-like upper edge of a locking plate **50** which is situated at the rear end of the lock and which can be displaced upwards or downwards by a distance of 1 mm through an extension **51** acting as an adjusting cam. The hook **52** of the latch **48** has a height of more than 1 mm for reasons that will be explained further below.

Mounted behind the locking plate **50** in the lock **38** there is a plunger **54** which is vertically displaceable by the trigger **53** and which, at its upper end, carries a pin **55** which can be swung out rearwards against spring pressure and which is normally able to lift the latch **48** above the locking plate **50** when the trigger **53** is actuated for an individual shot. However, by pushing the trigger **53** away completely, continuous fire is obtained in which case the plunger **54** stays in its elevated position and engages beneath the hook **52** of the latch **48** and keeps it at such a level that, when the locking plate **50** is pulled downwards by the cam-like extension **51** of the slide **40**, it can be moved away over the upper edge of the locking plate **50**, in other words the slide **42** carrying the firing pin **43** is released in this position. Since, with each shot, the piston **32** is displaced rearwards by the gases given off in the barrel **6** taking the slide **40** with it the locking plate **50** is moved downwards with a certain time lag after each shot so that the next shot is automatically released after the lock **38** has been cocked. If, by contrast, the trigger **53** is only pulled so far as to release a single shot, the plunger **54** returns to its lowered starting position after each pull of the trigger with the result that, when it is vertically displaced again the pin **55** arranged on it has to lift the latch **48** beyond the locking plate **50**. In this case, continuous fire is impossible because the plunger **54** itself is not pushed high enough automatically to release another shot.

After it has been released, the trigger **53** is swung back into its neutral starting position by spring-loaded push rods **64**.

In addition, there is arranged on the slide **40** a downwardly projecting nose **56** which projects with axial clearance into a groove **57** in a sliding wedge **58** which is situated below the cartridge roller **25** in the fork **26** and which urges the cartridge roller **25** upwards into the requisite position in front of the barrel **6** before and during firing of a cartridge. In addition, the sliding wedge **58** is provided with a fitting key **59** which can engage in corresponding grooves **60** in the cartridge roller **25** so that the sliding wedge **58** not only urges the cartridge roller **25** upwards, but also prevents it from rotating during and before firing of a cartridge. The sliding wedge **58** rests on a wedge surface **61** which is situated in the fork **26** and which, to reduce friction, can carry a flat needle bearing **62** arranged between and the sliding wedge **58**.

After a shot has been fired, the rod **37** is displaced rearwards by way of the piston rod **35** and a pin **63** engaging in the elongated hole **36**, the piston rod **35** initially travelling a distance of approximately 20 mm before it picks up the rod **37** which travels a total distance of approximately 14 mm. After the rod **37** has travelled a distance of about 3 mm, the nose **41** of the slide **40** comes into contact with the piston **42** of the firing pin **43** and takes the firing pin **43** over a distance of 11 mm into its cocked position. In addition, the tongue **56** displaces the sliding wedge **58** rearwards by a distance of approximately 6 mm after initially overcoming the axial clearance. When the sliding wedge **58** is in its rearmost position, the cartridge roller **25** can be rotated in a manner described further below.

Following return of the slide **40** under the effect of a compression spring arranged on the rod **37** after the gas pressure in the cylinder **31** has collapsed, the sliding wedge **58** is again pushed forwards so that the fitting key **59** engages in the next groove **60**, moving the cartridge roller **25** into a position in which the next cartridge can be fired. The locking plate **50** is then displaced downwards by a distance of 1 mm so that, if the trigger **53** has been pulled through to the continuous fire position, the next shot is automatically released. Otherwise, the pin **55** of the plunger **54** would have to lift the latch **48** beyond the upper edge of the locking plate **50** in order to release the next individual shot through the trigger **53**.

The cartridge roller **25** is moved another step forward through a ratchet coupling when the piston rod **35** is moved rearwards under gas pressure as a result of a shot being fired. However, the same movement is initiated when the handle **3** is pivoted upwards to the front in the direction of arrow **4** and back again, as a result of which the lock **38** is simultaneously cocked.

Arranged on the piston rod **35** in front of the roller **25** there is a sleeve **65** provided at its end with teeth **66** which correspond to teeth provided on the spindle **67** of the cartridge roller **25** provided with a central full-length bore. The teeth **66** are in the form of ratchet

teeth. By virtue of the elongated hole **36** and the pin **63**, the sleeve **65** can be displaced axially relative to the piston rod **35**, but has to follow any rotational movements of the piston rod.

The piston **32** is guided by means of a pin **68** and an elongated slot **69** provided in the cylinder **31** in such a way that, during its return movement, it makes a partial revolution which it repeats in the opposite direction during its forward movement. The slot **69** is designed in such a way that the partial revolution only begins after the piston **32** has already completed some of its return movement or forward movement. As a result of the partial revolutions, the sleeve **65** is also rotated, jumping forward by a distance corresponding to one tooth relative to the spindle **67** of the cartridge roller **25**. When the cartridge roller **25** is released on completion of the return movement of the piston **32** with the sliding wedge **58** pushed back, the sleeve **65** can rotate the cartridge roller **25** by a distance corresponding exactly to one tooth before the re-advancing piston **32** returns the sliding wedge **58** into its locking position. The sliding wedge **58** is only returned after the pin **68** has reached the last, straight part of the elongated slot **69**.

The sliding wedge **58** has to have a certain wedge angle in order to be able to exert the required locking effect, and on the other hand, in order to be readily displaceable in the manner required. In the embodiment illustrated, this wedge angle is 4.5°.

Return of the piston **32** and of the piston rod **35** takes place under the effect of the gas pressure prevailing in the cylinder **31** or by pivoting the handle **3** about a pin **70**. In this case, a compression spring **71** arranged on the piston rod **35** is placed under tension, being released on completion of the return movement with the result that the piston rod **35** together with the piston **32** hurries back frontwards, thus initiating the corresponding return movements in the lock and further rotation of the cartridge roller **25**.

For placing the compression spring **71** under tension, the handle **3** comprises a carrier fork **72** which, during pivoting of the handle about a pin **70**, is connected to the compression spring **71** or to a slide arranged in front of it.

The lock **38** is made very short in order not to interfere with the sighting mechanism, especially the mirror section in the stock **1**, and in order to be able to keep the hand firearms as short as possible. The distance travelled by the firing pin **43** is also intended to be as short as possible and it is for this reason that compression springs **46** and **47** which provide for the requisite impact energy over an extremely short distance are arranged on both sides of the firing pin.

The cartridge **23** shown in FIGS. **5** and **8** intended for use in the abovedescribed embodiment of the rifle according to the invention is adapted in its cross-section to the shape of the grooves **28** in the cartridge roller **25**. This cartridge **23** comprises an elongated shell **80** of glass-fibre-reinforced polyamide in whose rear end is fitted a detonator **81** containing a detonator composition **82** and an anvil **83** in the usual way. The anvil if prevented from being displaced axially frontwards by means of a bead **84** surrounding it.

The space **85** in front of the detonator is filled with powder. An insert **86** made of brass, steel or the like acting as holder for a bullet **87** is situated in the shell **80** near the front end thereof. This tubular insert **86** widens frontwards and has a frustoconical end face **88** which, when the cartridge is fired, is applied valve-seat-fashion to the inlet end of the barrel **6** so that the gases given off during firing are unable to escape laterally between the cartridge and the inlet end of the barrel.

The bullet **87** consists of a core **89** of tungsten and of a copper tip **90** fused on to it in such a way that it also projects laterally beyond the front end of the tungsten core. This part of the copper tip **90** acts as a kind of guide ring in the barrel, in other words the rotation-producing grooves of the barrel merely dig into the relatively soft copper but not into the hard tungsten.

In order to prevent the disposition of copper in the barrel **6**, the bullet **87** consisting of a combination of tungsten and copper can be provided with a nickel covering applied by electroplating.

The bullets **87** consisting of a combination of tungsten and fused-on copper are relatively easy to produce because pure tungsten can be machined in the requisite manner. Although the material costs are high, the bullets are so small by virtue of their low calibre that the material costs are justified because the production costs, compared with those of conventional steel-jacketed bullets, are very much lower so that, overall, the individual bullets are even cheaper than conventional steel-jacketed bullets of any calibre. In addition,the tungsten cores **89** can be reused by collecting them in the target area, thus further reducing the total material costs.

In the embodiment shown, the cartridge **23** is inserted into s steel rail **91** which forms the upper wall of the cartridge shell **80** when the cartridge is inserted into a groove **28** of the cartridge shell **25**. However, this steel rail **91** is not absolutely necessary. Instead, the cartridges **23** can also be directly attached to the belt **24**. On one side, the steel rail **91** is provided with a shearing edge **92** whose effect is that, under the effect of the forces generated during firing the bolt **24** is separated between this shearing edge **92** and the inner wall of the fork **26** so that the fired cartridges can be individually objected.

The cartridge shell **80** preferably has the cross-sectional form shown in FIG. **8**, in other words it is circular at its lower end, whilst its outer surface corresponds to the curvature of the cartridge roller **25** which is circular in cross-section. In the firing position, the cartridge roller **25** forms the firing chamber in conjunction with the fork **26**, the arrangement being such that the cartridge **23** is held in such a way that the pressure generated by detonation of the powder can only ever escape frontwards so that the bullet **87** is propelled through the barrel **6** in the required manner.

However, the cartridges **23** can also have other cross-sectional forms as shown in FIGS. **9** and **10**, but they must adhere to the contour of the outside of the cartridge roller **25**. If, by contrast, two co-rotating cartridge rollers are used with each cartridge held between them during firing, the cartridges can have a completely circular cross-section (FIG. **10**), in which case the cartridges can be secured between two belts **24**.

The cartridge shown in FIGS. **6** and **9** differs from the cartridge shown in FIGS. **5** and **8** in the shape of the cartridge shell **93**. This cartridge shell is circular in cross-section and has an attachment **94** which enables it to be adapted in the manner required to the contour of the cartridge roller **25**.

The detonator **81** with the plug **82** and the anvil **83** is separated from the powder-filled inner space **85** by an intermediate wall **95** with a full-length bore **96** through it. The insert **86** for the bullet **87** bears against a bead

97 formed in the periphery of the cartridge shell **93.** This bead **97** enables the cartridge shell to be extended during firing, thus ensuring that the conical end face **88** of the insert **86** bears against the inner end of the barrel, and that the required sealing effect which prevents thhe gases given off during firing from escaping before the barrel is obtained.

The cartridge shown in FIGS. **7** and **10** comprises a shell **98** circular in cross-section which is fired between two cartridge rollers each containing semi-circular cartridge grooves. This cartridge shell again has a bead **97** which acts as a holder for the insert **86** and which provides for the elongation required during firing. Another bead **99** is provided for axially retaining the detonator **81** and the anvil accommodated in it.

The bullet **100** shown in FIG. **11** is an arrow-like bullet with stabilising surfaces **101** which can also show some twist. This bullet is considerably longer than the bullets **87** shown in FIGS. **5** to **7** so that it does not have to be made of heavy metal such as tungsten, instead it can even be made of steel optionally provided with a nickel coating. This arrow-like bullet can also be fired from cartridges of the kind shown in FIGS. **5** to **10.**

The belt **24** can be provided with a marking extending from the beginning to the end thereof, for example in the form of a coloured marking which is short at the beginning and which, at the end of the belt, extends for example over the entire width thereof so that it is possible with one look to see the extend to which the belt has already been fired. This is important because several hundred cartridges can be accommodated in the cartridge box so that the marksman is hardly able to notice when his supply of cartridges will be exhausted. However, a quick look into the cartridge box or into the housing **2** or at the cartridge shells which have been ejected is sufficient to determine when the rifle will probably have to be reloaded.

By virtue of the extremely low calibre and the reduction in weight and space associated therewith, the marksman is able to carry much more ammunition than before, in addition to which the cartridges are much easier to feed into the gun.

The weapon according to the invention can also be simply designed in such a way that it can be used not only for single shots and for continuous fire, but also for sporadic bursts in which case only a certain small number of shots can be fired at once before the trigger mechanism has to be recocked. To this end, the cartridge roller can be provided with a locking mechanism intended for sporadic fire which holds the cartridge roller after it has completed one revolution, i.e. after 5 shots have been fired in the embodiment shown. The locking mechanism is only released again after the trigger has been re-actuated. Accurately regulatable and repeatable sporadic fire such as this is not readily possible in the case of conventional firearms.

FIG. **12** shows the image which the marksman sees on looking at the lower mirror **16** in the case of indirect aiming. In the upper mirror **17,** he sees the notch **14** and the bead **12** including the tube protecting the notch referred to here as the sighting tube **13,** and the terrain situated behind it. In addition, part of the compass card or scale is visible below the notch **14** and can be correctly read off because the marksman looks at it from beneath through the mirror **16.** The firing direction of the weapon can be immediately read off because the angle which has just been adjusted appears immediately below the notch **14.**

FIG. **13** shows a detail of FIG. **3** on a larger scale. FIG. **13** shows the shearing edge **92***a* arranged on the inside of the fork **26** which separates the cartridge situated in the uppermost groove of the cartridge roller **25** in front of the barrel **6** from the belt during firing because the belt is sheared along the edge **92***a* under the effect of the pressure which is developed in the cartridge during firing and which also acts outwards.

The rifle shown in FIGS. **14** to **21** consists essentially of a tube **301** which is offset by some 6 to 7 mm in its rear part **302** which makes up about one third of the overall length of the tube. This tube is fixed to a handle **303** which corresponds to the stock and butt of conventional rifles.

A repeating roller **304** and firing pin **305** are accommodated in the rear, offset part **302** of the tube **301.** A firing lever **306** acting as trigger is so mounted on the firing pin that it can be pivoted against the pressure of a spring **307.** The firing pin **305** can be cocked against the pressure of a compression spring **308** which is accommodated in a recess **309** in the firing pin **305.**

The front part of the tube **301** consists of a cylindrical housing **310** which can be screwed on and which carries the bead **311** accommodated in a sighting tube **312.** It addition, the front end **313** of the tubular housing **310** tapers conically and has an ejection opening **314** set back to the inside.

The cylindrical housing **310** surrounds the front part of the barrel **315** and forms the outer skin of a silencer which inside contains a rearwardly open silencer pot **316** with a support **317** cruciform in cross-section attached to it. This cruciform support consists of a sleeve **318** accommodating the barrel **315** which is supported through radially extending vanes **319** and widened feet **319a** by the inside of the tubular housing **310** in such a way that heat bridges are present outside so that the barrel can be cooled through the dissipation of heat. The barrel **315** is further cooled by air drawn into the housing **310** after a shot has been fired, as will be explained in detail further below.

The vent opening **320** of the silencer pot **316** which is set back inwards is at a distance corresponding substantially to the length of a bullet from the muzzle **321** of the barrel **315,** which prevents the gases issuing from the barrel from overtaking the bullet inside the silencer pot **316** and the housing **310** and hence from reducing the muzzle velocity of the bullet because substantially all the gases have to escape rearwards from the silencer pot **316** as long as the bullet has not yet left the silencer pot.

In addition, the housing **310** accommodates a repeating piston **322** which surrounds the centrally arranged barrel **315** and which can be displaced rearwards against the pressure of a spring **323** either under the effect of the gases given off during firing or even by means of a hand lever. A rod **324** intended to be used as a plunger for loading is attached to the repeating piston **322.** Its function will be explained in detail further below. In addition, a manually operated repeating lever **325** is pivotally mounted below the tubular housing **310** with which the repeating piston **322** can be displaced rearwards in cases where it is intended to load or even unload the weapon in the absence of previous firing.

The rear end of the tube **301** or of its rear offset part **302** is closed by means of an end plate **326** which can be fixed on bayonet-fashion and on which the rear part of the sighting mechanism, namely a diopter or the notch and a pivotal mirror **327,** is arranged.

A magazine **328** for the ammunition is accommodated in an opening in the handle or stock **303.** This magazine can be removed from the handle or stock **303** for replacement or refilling.

A telescopically extendable trigger guard **329** which can be swung out downwards about a pivot **330** is arranged on the underneath of the handle or stock **303.** This trigger guard also carries the lower part of the sighting mechanism, namely a mirror **331** and a rod **333** which engages in a duct **332** in the handle **303** and which is pivotally arranged on the trigger guard **329,** carrying a spring **334.** This rod **333** cooperates with a spring-loaded push rod **335** which, when the rod **333** is displaced downwards, moves downwards and in doing so swings the mirror **327** upwards in to the position shown in chain lines. If, therefore, the trigger guard **329** is extended and at the same time swung downwards so that it can be used as a shoulder support by the marksman, the marksman is able to take aim through the mirrors **331** and **327** and hence indirectly to sight a target and also to shoot indirectly.

In addition, the repeating piston **322** has arranged on it a repeating rod **336** which is guided axially rearwards and which projects displaceably through the rear end plate **337** of the repeating piston **322,** having a bushing **338** attached to it. In this way, it is possible for the repeating rod **336** to be entrained with a certain time lag by the repeating piston **322** during its forward and return movements. A foot **339** is arranged at the rear end of the repeating rod **336,** situated above the rear part **302** of the tube **301.** This foot **339** contains a downwardly projecting stud **340** which can be pressed by means of a spring **341** into grooves **342** formed on the outer periphery of the repeating roller **304.** Beneath the foot **339** there is a forked, flat spring **343** which is fixedly connected to the firing pin **305** and whose shape can be seen from the plan view in FIG. **18.**

For firing, a full magazine **328** is initially inserted into the opening in the handle **303** of the rifle. The repeating piston **322** is moved backwards with the repeating lever **325** so that the loading rod **324** fixed to the repeating piston pushes a cartridge from the magazine **328** backwards into the repeating roller **304.** When the repeating lever **325** is released, the repeating piston **322** is again pushed back forwards by the compression spring **323.** As a result of the movements of the repeating piston **322,** the repeating rod **336** was also pushed backwards with some delay, so that the pin **340** is forced out of the straight groove **342***a*, for example, and, sliding backwards over the smooth outside of the repeating roller **304,** is pushed into another groove **342** which comprises the straight end portion of such groove and which lies in the same path as the straight groove which forms the beginning of groove **342.** During the forward return movement of the repeating piston **322,** the repeating rod **336** is again entrained with some delay, except that on this occasion the pin **340** remains in the groove **342** and is guided helically over part of the outer periphery of the repeating roller **304** so that the repeating roller is rotated one step further during this movement. Since the repeating roller has three axial bores **344** for accommodating cartridges and hence three grooves **342, 342***a* and **342***b* as well distributed helically over its outer periphery, the repeating roller **304** is rotated through 120° during the return movement of the repeating rod **336.**

The cartridge which is pushed into the repeating roller during this movement is now situated in the firing behind the barrel **315.** Since, in addition, the firing pin **305** is cocked by way of the repeating rod **336** during the return movement of the repeating piston **322,** the cartridge which has been pushed in can now be fired.

If the trigger **345** situated below the firing pin is then pulled backwards, a spring pin **346** mounted in it which, in some cases, can also be laterally deflected, presses against the rear end of the firing lever **306** and pivots this end upwards so that the front end of the firing lever **306** is moved downwards and can be pushed into a groove **347** in the repeating roller **304.** The repeating roller **304** is accurately aligned in this way so that the cartridge lying behind the barrel **315** ready to be fired in situated exactly in front of the bore of the barrel. The firing pin **305** which has now been released by the firing lever **306** is urged forwards by the spring **308** and with its tip **348** breaks through a plate **349** and strikes the percussion cap of a cartridge, releasing the shot.

After the bullet has left the barrel **315,** the powder gases flow into the silencer pot **316** and, for the most part, are deflected rearwards. At the same time, they are relieved of some of their pressure, although the pressure of the powder gases is sufficient to move the repeating piston **322** rearwards against the pressure of the spring **323** so that the weapon is automatically reloaded in the manner described. If a total of three cartridges had been fired in succession, the fired cartridge shell lying in the corresponding bore **344** is ejected rearwards by the new cartridge, i.e. during insertion of the fourth cartridge into the repeating roller **304.**

The function of the flat, forked spring **343** is to hold the firing pin **305** in its cocked position until the repeating roller **304** has been rotated the required step forward after loading. This is particularly important in the case of sporadic and continuous fire so that the firing pin **305** is only released when a new cartridge is situated exactly behind the barrel **315.**

As already mentioned above, this rifle can be used selectively for individual fire, sporadic fire and continuous fire. Finally, the weapon can also be safeguarded in the usual way. To this end, a stop disc **350** is rotatably mounted in the handle **303** behind the trigger **345,** being rotated through a lever **351** arranged on the outside of the handle **303.** In the neutral position of the lever **351,** the trigger **345** cannot be pulled back at all on account of a pin **345***a* arranged on it so that the gun cannot be fired. In the position intended for single-shot fire, the trigger **345** can be pulled back about 2 mm, in the sporadic-fire position, about 4 mm and in the continuous fire position about 6 mm.

In the single-shot position, the firing lever **306** is simply forced upwards and hence pivoted by the pin **346** of the trigger **345** so that the front end of the firing lever **306** snaps into the preceding groove **347** in the repeating roller **304.** During the return movement made by the firing pin **305** after the shot has been fired, the pin **346** is forced to the side by the similarly returning firing lever **306** so that, to release the next shot, the trigger **345** has to be released beforehand with the result that the pin **346** again moves into a position below the firing lever **306.**

In the sporadic-fire position, the trigger **345** is pulled further backwards so that the firing lever **306** is no longer forced upwards by the laterally deflectable pin **346,** but by the upper side of the trigger **345** instead which keeps the firing lever **306** in its elevated position following the lateral deflection of the spring **346.** Three

grooves **347** into which the front end of the firing lever **306** can engage are distributed around the periphery of the repeating roller **304.** Two of these grooves are made deeper than the third. In the sporadic-fire position, however, the upper side of the trigger **345** can only force the firing lever **306** downwards to such an extent that it is able to snap into and engage in the two lower grooves. By contrast, the firing lever **306** remains suspended in front of the third shallower groove. In order to release another shot, the trigger **345** has to be released again after which another sequence of three shots is fired until the repeating roller **304** has completed one revolution about its longitudinal axis. It is only at the beginning of sporadic firing that less than three shots can be fired in one burst.

By contrast, the trigger **345** can be pulled back even farther in the continuous-fire position. As a result, the firing lever **306** can be pivoted to such an extend that its front end can also engage in the shallower of the three grooves **347.** It is possible in this way to reach the continuous-fire position in which there are no mechanical obstacles to the continuous delivery of shots.

The flat forked spring **343** attached to the firing pin **305** has two fork arms **343***a* and **343***b* which normally contact one another at their front end as shown in FIG. **18.** This front end normally abuts against a pin **352** fixed to the rear part **302** of the tube. However, the pin **340** belonging to the foot **339** of the repeating rod does engage between the arms **343***a* and **343***b* of the spring **343.** During the final millimetres of the return movement of the repeating rod **336,** this pin **340** spreads the spring arms **343***a* and **343***b* apart so that they are able to slide laterally past the pin **352,** thus releasing the firing pin **305.**

The barrel **315** is additionally cooled during the return movement of the repeating piston **322** because air can be drawn into it by this return movement. This is of particular significance in the case of continuous fire.

The magazine **328** according to the invention is particularly suitable for cylindrical ammunition which is inserted into the repeating roller **304** from the front and ejected rearwards from it. The cartridges **353** are wrapped in a belt **354** attached at its end to a roller **355.** On one side, this roller **355** is provided with a helical spring **356** under tension so that the belt **354** is always under axial tension. The package **357** consisting of the belt and the cartridges inserted loosely between the individual layers thereof has a double layer of belt around its outer periphery so that the package **357** can easily be held together. The width of the magazine **328** is such that it corresponds substantially to the length of the cartridges inserted, i.e. the cartridges slide with their two ends along the inner walls of the magazine.

The belt **354** is guided through the magazine **328** in such a way that it pulls the cartridges wrapped in it successively into a position in front of a wedge **358** arranged in such a way that the cartridge in contact with it is situated immediately in front of the bore **344** of the repeating roller **304** situated in the loading position and, hence, can be switched from the magazine **328** into the repeating roller **304** by the loading rod **324** attached to the repeating piston **322.**

After the loading rod **324** has been withdrawn from the magazine, the belt **354** is pulled forward under the tension of the helical spring **356** and hence pushes the next cartridge **353** into the loading position in front of the wedge **358.** The belt **354** is designed in such a way that it runs along the inside of the curved outer wall of the magazine **328** and is visible through a window **359** provided therein. Figures or other markings printed on the belt, indicating the extend to which the magazine is still full, can be seen through this window **359.**

The belt **354** can be fixedly connected to the roller **355,** although it is also possible for the belt to be detachably secured to the roller. In this case, the cartridges wrapped in the belt can be accommodated in a box to be inserted into the magazine **328** from which the end of the belt projects. When the side wall of the magazine is closed, hooks connected to the winding roller are pressed into the projecting end of the belt, and a lock for the helical spring **356** is released to enable the belt to be wound up in the manner described above. If the box is empty, the belt is manually unwound from the roller **355** so that the helical spring **356** is again placed under tension before a new box can be inserted. In its engaged position, the lock ensures that the helical spring can only be wound up, but only runs down again after the magazine has been closed following insertion of a new box.

Another possibility is to arrange the cartridge pack **357** on a roller which is pivotally mounted in the magazine **328** and which also comprises a helical spring or the like so that the belt is kept constantly under tension as it runs down and the leading cartridge of the pack can also bear against the wedge **358.**

It is also possible, instead of one belt extending more or less over the entire width of the magazine **328,** to use two parallel belts which leave a space free in the middle so that a recess can also be left in the middle on the wedge **358,** being used for manually introducing fresh cartridges into the magazine.

The weapon according to the invention can be kept relatively short and light because the ammunition is introduced from the front and ejected from the rear. Sound is damped and muzzle flash made invisible by a silencer coupled with the repeating system whilst at the same time the weapon repeats. The silencer lengthens the weapon to a negligible extent only and is so light that it does not increase the weight of the weapon to any appreciable extent. Overall, the weapon according to the invention is simple in design and substantially troublefree, extremely handy and easy to operate although it can be fired both directly and indirectly from a position of absolute cover. The weight of the rifle could be reduced even further by having the repeating roller accommodating only two cartridges at a time because in this way its diameter would be reduced. However, the result of this would be that, in the case of sporadic fire, it would only be possible for two shots to be delivered successively in one burst after which a mechanism would have to be recocked which, in some cases, would not be regarded as adequate.

Natually, it is also possible to use a telescopic sight instead of the mirror system shown in the drawings for the optical redirection of the sighting mechanism, or to couple a telescopic sight of this kind with the optical re-directing system.

As shown in FIGS. **22** and **23,** each cartridge **353** has a cylindrical shell **360** of a plastics materials with a certain degree of resilience. The advantage of this is that the shells can be produced inexpensively by injection moulding, are light in weight and are unable to remain in the bores **344** of the repeating roller **304** after firing.

The rear end **361** of the shell **360** has fairly considerable wall thickness and is closed by a plate **362** with central opening **363** in it to allow through the tip **348** of

the firing pin **305.** A percussion cap **364** is accommodated with a gentle press fit in the rear end **361** of the shell in which there is also fixed an anvil **365** which with its tip **366** faces the percussion cap **364.** Openings **367** through which the detonating flame can penetrate inside the cartridge shell **360** are provided laterally of the anvil **365.**

The press fit of the percussion cap **364** is tight enough to prevent it from being unintentionally displaced but loose enough to allow it to be pushed further into the cartridge shell **360** by the tip **348** of the firing pin **305** until it comes into contact with the tip **366** of the fixed anvil **365** as a result of which detonation occurs. Under the effect of the pressure generated inside the cartridge shell during firing, the percussion cap **364** is displaced back towards the plate **362** and, at the same time, pushes back the firing pin. In this way, the percussion cap seals off the opening **363** so that gases given off inside the cartridge shell **360** can only escape forwards, propelling the bullet **368** accommodated at the front end through the barrel **315.**

Also accommodated at the front end of the cartridge shell **360** there is a plastics sealing piston **369** which accommodates the bullet **368** in a central bore **370** which widens slightly conically at its front end. The sealing piston also performs the function of sealing the cartridge shell **360** with respect to the rifle so that no gases are able to escape laterally. To this end, it is provided at its rear end with a conical insert **371** made of metal, preferably steel, which has a funnel-like inlet opening **372** and which supports the bullet **368.** The advantage of this is that the rear end of the sealing piston **369** which is intended to provide a seal with respect to the inner wall of the cartridge shell **360,** does not melt during combustion of the powder filling **373** of the cartridge, but instead presses the plastics sealing piston **369** firmly against the inner wall of the shell. By virtue of the slight conical widening of the central bore **370** in the sealing piston **369,** the bullet projecting into it is automatically centred in the barrel **315** during firing if it has not been aligned accurately enough in front of the barrel by the repeating roller **304.** The front end of the cartridge **353** carries an annular disc **374** made of metal such as steel or brass so that the cartridge shell **360** remains absolutely cylindrical, even during firing, and does not form a seam projecting beyond its front end which could interfere with loading.

The powder accommodated in the cartridge **353** burns during detonation and the pressure suddenly generated in consequence of this displaces the insert **371** of the sealing piston **369** slightly forwards so that the resilient part of the sealing piston **369** expands and is pressed against the inner wall of the cartridge shell **360.** Accordingly, the gases are unable to escape laterally, but flow completely into the barrel after they have forced the bullet **368** out of the cartridge into the barrel. Accordingly, there is no danger of some of the gases escaping around the sealing piston **369** or to the rear because the percussion cap **364** seals the inside of the cartridge shell **360** at its rear end whilst expansion of the sealing piston **369** provides a seal at the front end.

In the embodiment shown in FIGS. **24** and **25,** the rear part of the cartridge **375** is provided with a conical trimming means **376** to make it easier to insert the cartridge into the repeating roller **304.** In front of the percussion cap **364,** the bore **363** for the firing pin is covered by a thin integrally moulded plastics cover **377.** This provides the cartridge with greater protection against moisture and dirt. The anvil **378** is in the form of a split ring of resilient material comprising four spring arms **379** which snap into a corresponding groove **381** in the shell **380.** The front part **382** of the cartridge shell **380** is made relatively thin and provided with small annular beads **383** extending fully around it. As a counterpart to these beads, the sealing piston **384** is provided externally with annular grooves into which the beads **383** fit. This arrangement prevents excessive displacement of the sealing piston **384.** The inner edge **385** of the sealing piston **384** is prevented from molting by injecting into the shell **380** a thin lip-like sealing ring **386** below which the sealing piston slides when pressed into the shell. The sealing piston **384** is also closed at its outside end by means of a thin integrally injection-moulded wall **387.** This wall is destroyed and burnt during firing.

In the embodiment shown in FIG. **26,** metal caps **389** and **390** are pushed on to the rear end and front end, respectively, of the cartridge shell **388.** The percussion cap **364** which, in this case, is detonated in the usual way is accommodated in the rear cap **389.** Since the plastics sealing piston **391** melts at its rear end during firing, the gas penetrating between the sealing piston and the wall of the shell, the necessary seal has to be provided by the metal cap **390** pushed on to the front end of the cartridge shell **388.**

In the embodiment shown in FIG. **27,** the cartridges are detonated in the same way as the cartridges shown in FIGS. **22** and **25.** The front end of the cartridge shell **392** is sealed by a sealing ring **393** inserted as closure into the cartridge shell. That end face **394** of this sealing ring **393** which faces the percussion cap **397** is conical in shape. When the powder gases come into contact with the rear end of the plastics sealing piston **395,** the sealing piston is displaced forwards and slides off outwards on the conical part of the sealing ring **393.** As a result, the front end of the sealing piston is expanded and pressed firmly against the wall of the shell. The steeper the cone of the sealing ring, the firmer the contact with the shell. With the exception of a small guide ring **396,** the internal diameter of the sealing piston **395** is greater than the external diameter of the bullet held in it so that the bullet **368** cannot be held overstrongly.

As shown in FIG. **27,** the back of the percussion cap **397** is provided with a stud **398** which projects into the opening **363** in the plate **362** of the cartridge shell **392,** substantially filling this opening. Like the percussion cap **397,** the stud **398** consists of metal and prevents small deformations during firing. In this embodiment of the cartridge as well, the firing pin can be relatively short, and dirt or the like is prevented from penetrating into the opening **363.**

Another embodiment of a cartridge according to the invention is shown in FIG. **28.** This cartridge comprises a shell **399** which once again has an opening **401** in the plate **400.** A stud **403** fixed to a cover plate **402** is arranged in this opening **401.** The cover plate **403** carries a projection **404** which lies behind the percussion cap **405.** The percussion cap **405** is supported by a ring **406** which is screwed or otherwise positively inserted into the cartridge shell **399** and which carries a pointed anvil **407.** In this case, the percussion cap is not pushed forwards onto the anvil for detonation. On the contrary, detonation takes place through penetration of the projection **404** of the cover plate **402** into the per-

cussion cap which is thereby deformed. In this embodiment, the bottom of the percussion cap **405** can be kept thinner than in the embodiments described in the foregoing so that it can be deformed as readily as possible. However, a cover plate of steel or the like is necessary to prevent the percussion cap from bursting.

A sealing piston **408** closed at its front end by a thin wall **409** is inserted into the front end of the cartridge shell **399.** This sealing piston contains a bullet **410** according to the invention which is bevelled at its rear end **411** to give it a better aerodynamic form. The sealing piston **408** is inserted into a section **412** of the carridge shell **399** of reduced wall thickness so that its rear end can be supported by a surrounding shoulder **413.** In addition, the sealing piston **408** is welded firmly to the cartridge shell **399** either by ultrasonic welding or oven simply by friction welding.

In all of the last five embodiments of the ammunition, the bore of the sealing piston of the cartridge widens slightly in the forward direction in order to compensate any dislocation of the repeating roller relative to the barrel. Accordingly, the bullet has a little air and is automatically centred on entry into the barrel.

Naturally, it is also possible to combine individual features of the cartridges discussed in the foregoing with one another, in other words for example the detonation system shown in FIGS. **26** or **28** can be provided in a cartridge comprising a sealing piston of the kind shown in FIG. **24.** It is apparent from the foregoing that the sealing of the cartridges proposed in the foregoing is necessary on account of the sudden pressure and the fast movement of the gases from the percussion cap towards the barrel, and on account of the sudden impact of the gases on the sealing piston and on account of the high temperatures (approximately 3500°C.), and cannot be compared with seals known from pneumatic machinery, hydraulic machinery etc. In addition to the advantages discussed in the foregoing, the use of plastics for producing cartridges shells has the further advantage that the heat generated during detonation is not transferred to the repeating roller and hence to the entire lock system quite so effectively as it is in the case of metal shells. There is no need for a pull-out groove on the outside of the cartridge shell because cartriges that have been fired are of course not pulled out but rather ejected or pushed out from the cartridge roller.

FIGS. **29** and **30** show how, during objection of the cartridges from the cartridge roller, the fresh cartridge remains in exactly the correct required position in the cartridge roller. To this end, there is arranged in the ejection opening **415** a stop mechanism for the particular cartridge shell ejected which consists essentially of a lever **416** pivotally mounted on a pin **417.** At its lower end, this lever carries a stop **418** which, when the lever **416** is in the vertical position shown in solid lines in FIG. **30,** is situated behind the repeating roller **304** by a distance corresponding exactly to one cartridge length. Accordingly, it also acts as a stop for the fresh cartridges inserted into the repeating roller **304** when a spent cartridge shell is ejected rearwards from the repeating roller **304** following insertion of a fresh cartridge.

The lever **416** mounted vertically in a slot **419** in the rear breach blockmechanism part of the rifle operates as follows:

The upper end **420** of the lever **416** projects upwards from the tube **302** by a distance of a few millimetres. Attached laterally to the foot **339** of the repeating rod **336** there is a push rod **421** which extends the foot rearwards by a distance of approximately 30 mm. When the foot has moved into its rear position during repeating, pressing the firing pin **305** into its rearmost position, the lever **416** or its upper end **420** is also pushed into its rearmost position so that the lever **416** stands vertically and, with its lower end in the form of a stop **418,** projects downwards into the ejection opening **415,** as shown in particular in FIG. **29.** Accordingly, the spent cartridge shell **399** ejected during repeating is stopped by the lever **416.** The stop **418** must lie at a distance corresponding exactly to one shell length from the rear side of the repeating roller **304** to ensure that, during repeating, the spent cartridge shell leaves the repeating roller whilst the fresh cartridge shell introduced does not project from the cartridge roller and interfere with the further rotation thereof.

If a new repeating cycle is initiated, the repeating rod initially moves into the magazine and pushes a fresh cartridge from the magazine rearwards into the cartridge or repeating roller **304.** A spent cartridge shell present in the cartridge or repeating roller is pushed by the fresh cartridge rearwards out of the repeating roller into the ejection opening **415.** A spent cartridge shell present in the ejection opening **415** can leave the ejection opening **415** because at this stage in the repeating cycle the lever **416** is freely pivotal so that the spent cartridge shell initially retained by it is deflected downwards over a sloping surface **425** situated at the end of the ejection opening **415.** The lever **416** is only pushed into its vertical position by the push rod **421** and held there after the cartridge originally present in the ejection opening **415** has dropped out and most of the following spent cartridge shell has been pushed out of the repeating roller **304.**

It is pointed out that, instead of having bores, the front plate of the repeating piston **322** can also have a reduced diameter. The advantage of this is that the friction of thhe displaceable repeating piston is reduced, thus also reducing the danger of this piston jamming. The repeating piston is of course guided on the barrel so that the front piston plate does not itself have to perform any guiding functions.

The repeating cycle can also be carried out as follows:

The repeating piston **322** together with the repeating rod **336,** the foot **339,** etc. moves forward during firing. At the same time, the firing pin **305** automatically moves forward and detonates the percussion cap of the cartridge situated in front of the barrel. The gases issuing frontwards from the barrel during firing press the repeating piston **322** back again and at the same time push a fresh cartridge into the repeating roller **304.** In this position, the repeating piston **322** is held by a suitable mechanism so that it is only after recocking that the aforementioned operation of firing and repeating is repeated. In a repeating cycle of this kind, the cartridge about to be fired does not stay overlong in front of the barrel which can be of advantage in cases where the barrel is fired hot because in this way the cartridge still waiting to be fired is unable to absorb any appreciable quantities of heat from the barrel. It is only during firing itself that the fresh cartridge present in the repeating roller moves into a position in front of the barrel and is immediately fired. The spent cartridge shell only remains in front of the barrel until the next shot is released. Any heat that may be transferred to the spent cartridge shell is harmless.

I claim:

1. A small calibre rifle with an optical sighting mechanism for direct and indirect sighting, said rifle including a stock, a shoulder support, means for pivoting said shoulder support in at least a downward direction, a repeating roller which accommodates a plurality of cartridges having a uniform cross-section over their entire length and which are inserted in said roller in one and the same direction and ejected therefrom after firing, a repeating piston which is displaceable by the gases given off during firing and on which there is arranged a plunger which pushes the cartridges individually from a magazine into said cartridge roller and which in doing so ejects a spent cartridge present in the cartridge roller from the opposite end thereof, said rifle further including a trigger cooperable with an adjustable stop which limits the displaceability of said trigger as required so that it can be optionally locked to individual, sporadic or continuous fire.

2. The small calibre rifle of claim **1** wherein said trigger cooperates through a plunger with one end of a firing lever pivotally mounted on a firing pin depending on the position of said stop, the other end of said firing lever engaging as a lock behind the back of the repeating roller under the effect of a spring.

* * * * *