United States Patent [19]

Haber

[11] **3,911,666**

[45] **Oct. 14, 1975**

[54] **ACTUATING MECHANISMS FOR WRIST INSTRUMENTS**

[76] Inventor: **Terry M. Haber,** 3050 S. Bristol, Apt. 8-C, Santa Ana, Calif. 92707

[22] Filed: **Oct. 21, 1974**

[21] Appl. No.: **516,688**

[52] **U.S. Cl.** ..... **58/50 R;** 58/23 R; 340/279; 200/61.48; 200/61.51; 200/61.53

[51] **Int. Cl.**[2] **G04B 19/30;** G04B 19/34

[58] **Field of Search** ..... 58/23 R, 23 BA, 50 R; 240/6.43, 2.1; 200/DIG. 2, DIG. 9, 61.45 R, 61.58 R, 61.48, 61.51, 61.53; 340/279

[56] **References Cited**

UNITED STATES PATENTS

3,508,044	4/1970	Hochberg	58/50 R
3,681,587	8/1972	Brien	240/6.43 X
3,729,923	5/1973	Brigliano et al.	58/23 BA
3,823,550	7/1974	Bergey	58/50 R
3,841,080	10/1974	O'Donald	58/50 R X

Primary Examiner—Stephen J. Tomsky
Assistant Examiner—U. Weldon
Attorney, Agent, or Firm—Ralph B. Pastoriza

[57] **ABSTRACT**

In an instrument adapted to be worn on the wrist including a power source, a display, means for illuminating or activating the display and actuating means for connecting the power source to the illuminating or activating means to energize the same, the improvement wherein the actuating means comprises either an inertia actuated switch means operative in the presence of a deliberate, rapid acceleration and/or deceleration of the wrist having a predetermined minimum magnitude and/or a pressure actuated switch means operative in the presence of pressure applied thereto by the wrist for momentarily connecting the power source to the illuminating or activating means.

3 Claims, 6 Drawing Figures

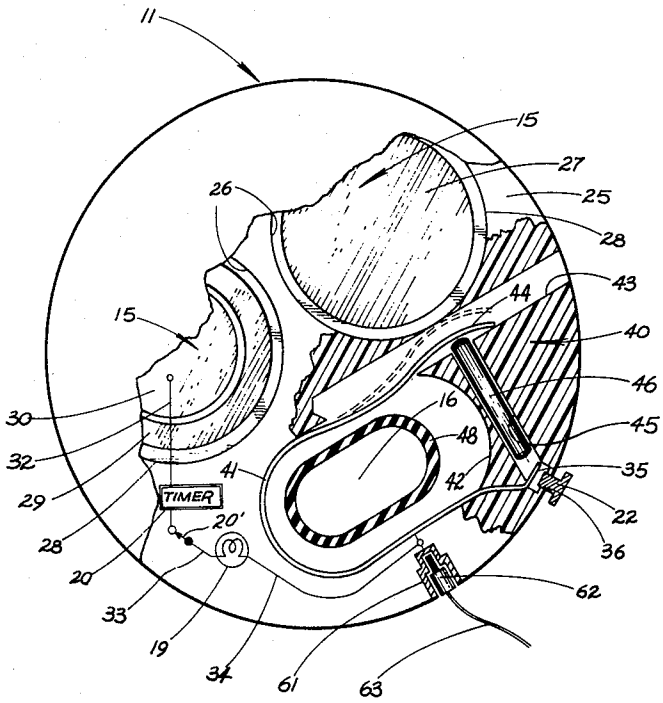

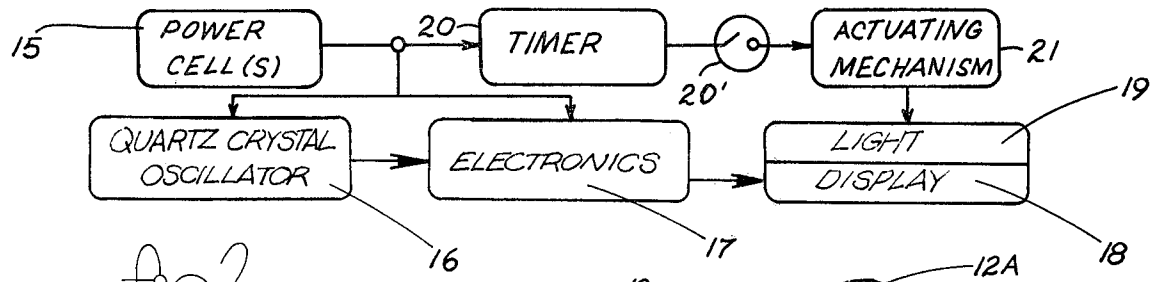

fig 2

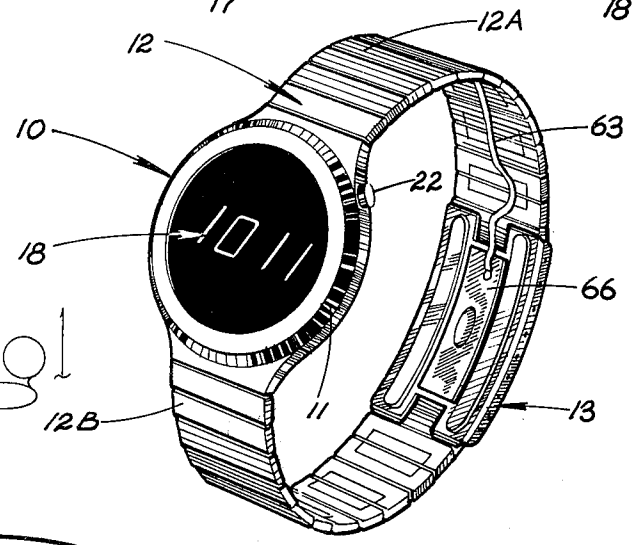

fig 1

fig 3

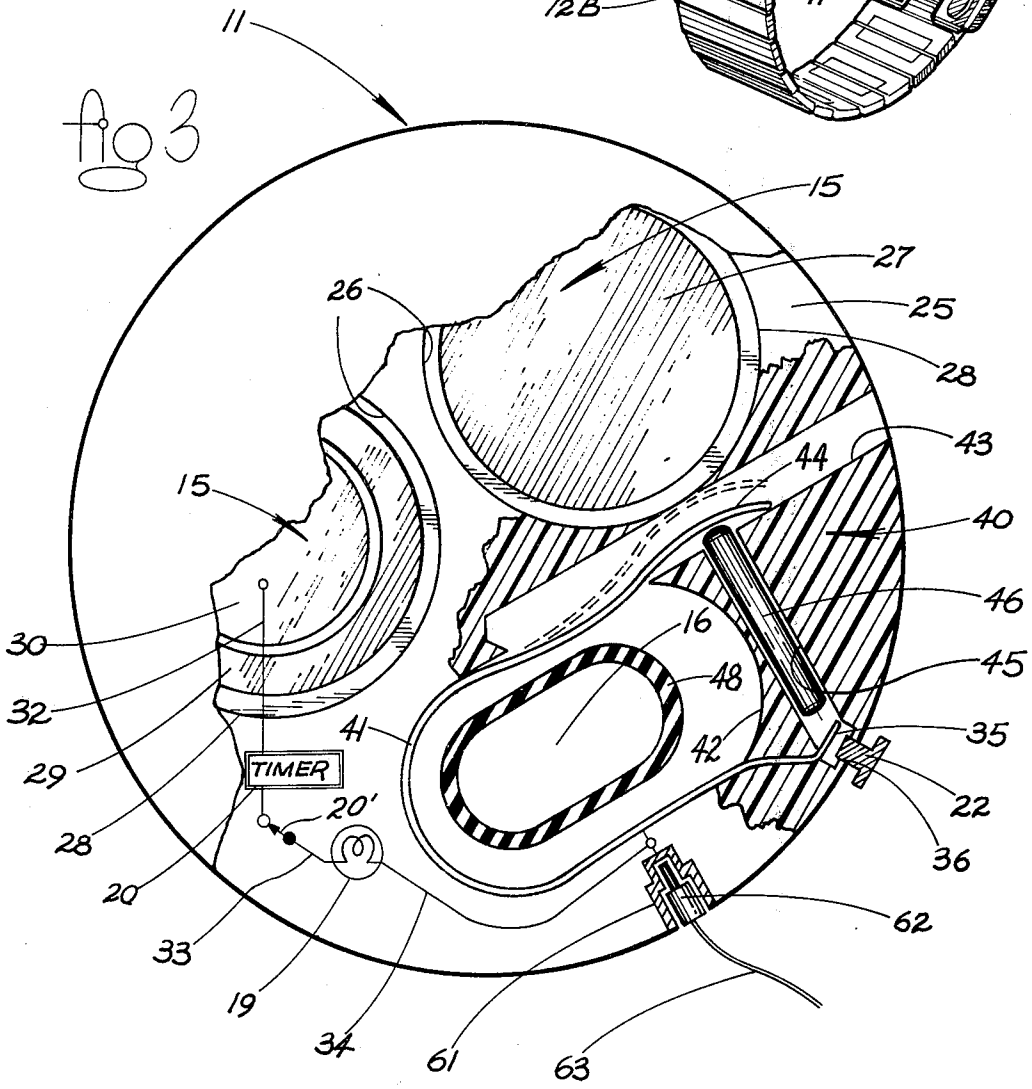

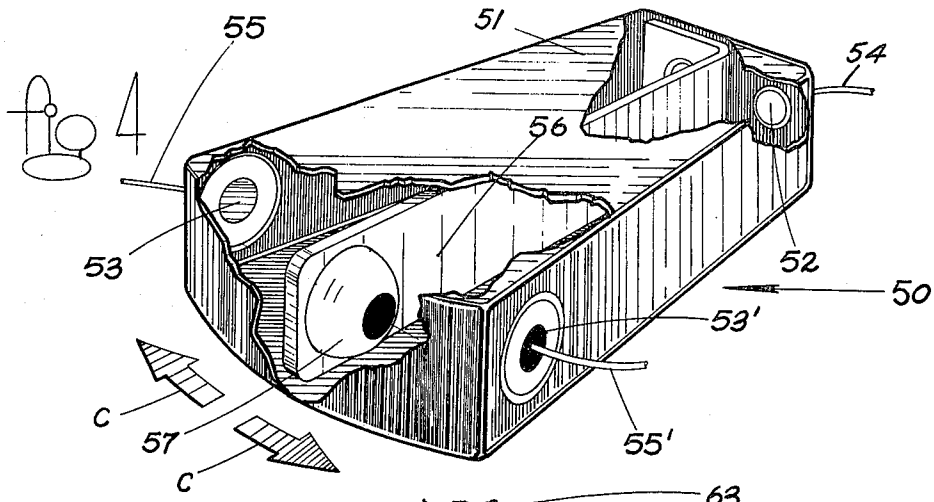

fig 4

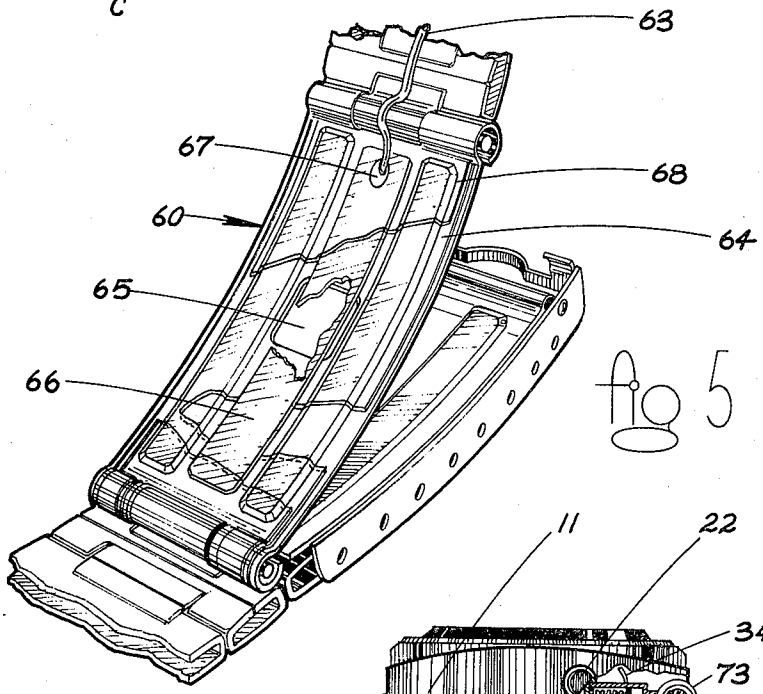

fig 5

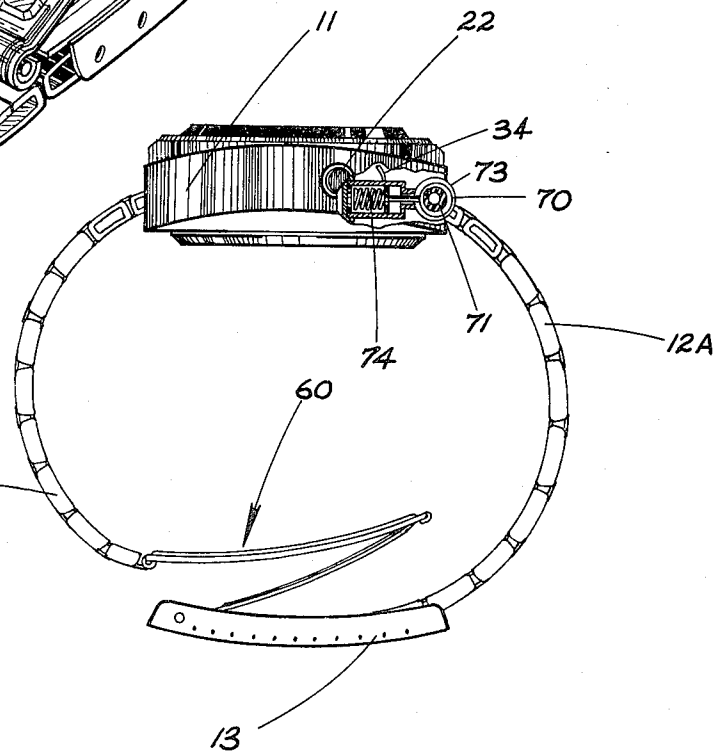

fig 6

ACTUATING MECHANISMS FOR WRIST INSTRUMENTS

BACKGROUND OF THE INVENTION

1. Field of the Invention

The present invention relates to actuating mechanisms for wrist instruments and, more particularly, to mechanisms worn on the wrist which may be actuated to close an electrical switch without the use of another hand.

2. Description of the Prior Art

Electronic quartz watches have become the most widely publicized and glamor-oriented segment of contemporary time keeping. Electronic quartz watches may be divided into two distinct categories, one being analog and the other being digital. Analog quartz electronic watches contain movable hands which tell time in a conventional manner. Digital quartz electronic watches presently utilize either light emitting diodes (LED's) or liquid crystal displays (LCD's) as the message media and each contains no moving parts.

The advantages of digital quartz electronic watches over analog quartz electronic watches are numerous. Since they have no moving parts and no friction, they have a potential loss of less than five seconds per year. Furthermore, there are no maintenance requirements with the exception of a periodic power cell replacement. The watches are extremely simple, requiring minimal manual assembly by semi-skilled laborers. Finally, the unique and contemporary nature of the digital display integral to both LED and LCD timepieces makes them a most pleasing change in an industry which has remained essentially unchanged for centuries.

In the case of a light emitting diode display, the diodes normally remain de-energized because the energization thereof is the greatest source of power drain and if the LED's remained illuminated, the power cells would have to be replaced too frequently. On the other hand, while liquid crystal displays are visible at all times, they do not have a great deal of contrast and a light is typically incorporated to increase the contrast of the display. Again, the light does not remain on at all times since this would represent too great a power drain.

Thus, with both LED's and LCD's, it is necessary to manually illuminate or activate same in order to see what time it is. The conventional approach to this problem has been to incorporate a manual switch on the watch housing, which switch is pressed to illuminate or activate the display. Unfortunately, the use of a manual switch, which must be activated by the hand other than the one on which the watch is positioned, is often inconvenient and many times impractical or impossible. Thus, when driving a car, carrying packages, etc. it would be a substantial improvement if the watch could be activated without the use of two hands. While some consideration has been given heretofore to a solution to this problem, no satisfactory solution is presently available.

SUMMARY OF THE INVENTION

According to the present invention, there is provided actuating mechanisms for wrist instruments which may be manipulated to close an electrical switch without the use of two hands. The present mechanisms have the capability of operating repetitively and only when desired. The present actuating mechanisms require deliberate movements of a type which do not normally occur so that the instances of unintentional activation of the display are minimized.

The present actuating mechanisms are designed for use in instruments adapted to be worn on the wrist and including a power source, a display, and means for illuminating or activating the display, the actuating means being operative to connect the power source to the illuminating or activating means to energize same. According to one embodiment of the invention, the actuating means comprises inertia actuated switch means operative in the presence of a deliberate, rapid acceleration or deceleration of the wrist having a predetermined minimum magnitude for momentarily connecting the power source to the illuminating or activating means. According to another embodiment of the invention, the power source, the display and the illuminating or activating means are mounted in a single housing and the instrument includes a band, the opposite ends of which are connected to the housing, the band being positionable around the wrist and including clasp means opposite the housing, and the actuating means comprises pressure actuated switch means mechanically connected to the band and operative in the presence of pressure applied thereto by the wrist to momentarily connect the power source to the illuminating or activating means. According to a still third embodiment of the invention, the instrument includes both an inertia actuated switch means and a pressure actuated switch means, either one of which may be used to momentarily connect the power source to the illuminating or activating means.

OBJECTS

It is therefore an object of the present invention to provide actuating mechanisms for wrist instruments.

It is a further object of the present invention to provide mechanisms worn on the wrist which may be actuated to close an electrical switch without the use of another hand.

It is a still further object of the present invention to provide an actuating mechanism for wrist instruments including an inertia actuated switch means.

It is another object of the present invention to provide an actuating mechanism for wrist instruments including a pressure actuated switch means.

Still other objects, features, and attendant advantages of the present invention will become apparent to those skilled in the art from a reading of the following detailed description of the preferred embodiments constructed in accordance therewith, taken in conjunction with the accompanying drawings wherein like numerals designate like parts in the several figures and wherein:

BRIEF DESCRIPTION OF THE DRAWINGS

FIG. 1 is a perspective view of an electronic quartz watch modified to include actuating mechanisms constructed in accordance with the teachings of the present invention;

FIG. 2 is a block diagram of the watch of FIG. 1;

FIG. 3 is a rear plan view, partially broken away, of the apparatus inside of the housing of the watch of FIG. 1, showing the inertia actuated switch means of the present invention;

FIG. 4 is a perspective view of an alternate embodiment of inertia actuated switch means;

FIG. 5 is a perspective view, partially broken away, of the clasp of the watch of FIG. 1, showing the pressure actuated switch means of the present invention; and

FIG. 6 is a side view, partially in section, of an alternate embodiment of the watch of FIG. 1 showing a slightly different technique for connecting the pressure actuated switch means of FIG. 5 into the circuit of FIG. 2.

DESCRIPTION OF THE PREFERRED EMBODIMENTS

Referring now to the drawings and, more particularly, to FIG. 1 thereof, the present invention will be described in its preferred embodiment as being applicable to an electronic quartz watch, generally designed **10**, adapted to be worn on the wrist. However, it will be apparent to those skilled in the art that the present invention is equally applicable to any other type of instrument adapted to be worn on the wrist and including a power source which activates a display, on command.

Watch **10** includes a housing **11** and a band **12** including two band sections **12A** and **12B**. First ends of band sections **12A** and **12B** are connected to opposite ends of housing **11**, band sections **12A** and **12B** being positionable around the wrist. Band **12** also includes a clasp **13** connected to the other ends of band sections **12A** and **12B** and being positioned opposite housing **11** for securing band sections **12A** and **12B** around the wrist.

Referring now to FIG. 2, positioned within housing **11** are one or more power cells **15** which provide the operating power for the remaining components. Such components also include a quartz crystal oscillator **16** which provides a highly stable output frequency. The output of oscillator **16** is applied to electronic circuitry **17** which utilizes the accurate frequency to calculate time in a manner known to those skilled in the art. Both quartz crystal oscillator **16** and electronic circuitry **17** receive their power from power cells **15**. The output of electronics **17** is applied to a display **18**, also shown in FIG. 1, so that the correct time may be displayed.

As discussed previously, the display may consist of either light emitting diodes or liquid crystal display elements. In either event, the output of electronics **17** is applied thereto so as to select the correct time display. On the other hand, in the case of light emitting diodes, the diodes normally remain deenergized and an external command must be given to energize same. In display **18** is a liquid crystal display and a light **19** is therefore associated therewith to increase the contrast of the display. In this case, while display **18** would remain on at all times, light **19** would remain off until it receives the external command.

For the above purposes, watch **10** includes a timer **20** connected to the output of power cell **15**, the output of timer **20** being applied via an on/off switch **20'** to an actuating mechanism **21**. In the case of an LED display, the output of actuating mechanism **21** would be applied directly to energize such display. In the case of the LCD display shown in FIG. 2, the output of actuating mechanism **21** is applied to light **19**. Manual actuation of mechanism **21** connects power cell **15** to light **19** for a time interval determined by timer **20**. Timer **20** is included so that the display remains visible for a preset time, after which the display is extinguished. In the watch of FIG. 1, there is provided a manually operable pushbutton switch **22** functioning, as will be described more fully hereinafter, when manually depressed, to illuminate light **19** in place of using the actuating mechanism. On/Off switch **20'** permits the actuating mechanism **21** to be cut out of the circuit when it is not desired to use the same.

Referring now to FIG. 3, housing **11** may have positioned therein a thin, non-conductive, disc-shaped member **25** for supporting the components described hereinabove. Thus, member **25** may have a pair of cavities **26** for receipt of power cells **15**. For purposes of explanation, power cells **15** are of a type in which the entire back **27**, the perimeter **28** and the outer portion **29** of the front thereof forms a first terminal whereas the central portion **30** of the front thereof forms the second terminal. Portions **27–29** of power cells **15** are electrically connected directly to housing **11** which is electrically conductive and forms the first terminal of the electrical circuit.

Portion **30** of power cells **15** is shown schematically in FIG. 3 as being connected via a lead **32** to timer **20** which is connected via a second lead **33** to light **19** for display **18**. The other side of light **19** is connected to another lead **34** so that contact between lead **34** and housing **11** will complete the electrical circuit shown in FIG. 2 for energization of light **19**.

According to conventional practice, watch **10** includes a terminal **35** positioned at the base of a bore **36** in member **25**. Switch **22**, an elongate, generally cylindrical member which is mechanically and electrically connected to housing **11**, extends into bore **36** but is normally biased by conventional means (not shown) so as to be spaced from terminal **35**. Terminal **35** is connected to lead **34** in a manner to be described more fully hereinafter. Accordingly, when button **22** is depressed, and brought into contact with terminal **35**, terminal **35** is connected to housing **11**, thereby completing a circuit to portions **27–29** of power cells **15**.

According to the embodiment of the present invention shown in FIG. 3, lead **34** may be connected to portions **27–29** of power cells **15** by means of an inertia actuated switch means, generally designated **40**. Switch means **40** includes an electrically conductive, movable contact **41**, one end of which is connected to terminal **35** and the other end of which is positioned closely adjacent to but spaced from perimeter **28** of one of power cells **15**. More specifically, member **25** typically has an additional cavity **42** therein in which quartz crystal oscillator **16** is mounted. Member **25** has an additional bore **43** positioned therein, bore **43** intercepting one of cavities **26** and cavity **42**. Contact **41** may be a thin, metal, leaf spring, one end of which is made integral with or connected to terminal **35** and the body of which extends into and around cavity **42**, the other end **44** of contact **41** extending into bore **43**, adjacent to but spaced from power cell **15**. Furthermore, lead **34** may be connected to contact **41** at any convenient place along the length thereof. In this manner, the entire length of contact **41** forms a continuation of terminal **35** and it is only necessary for any portion of contact **41** to touch housing **11** or one of portions **27–29** of one of power cells **15** to complete the before-described electrical circuit. It should be noted, however, that oscillator **16** is surrounded by a dielectric sleeve **48** to prevent electrical contact with contact **41**.

Member **25** has a still further bore **45** therein which connects with bores **36** and **43**. Positioned within bore

45 is a movable hammer means 46. Hammer means 46 may be en elongate, generally cylindrical member having rounded ends and a diameter slightly smaller than that of bore 45 so that it is freely movable therein. One end of bore 45 is sealed by terminal 35 whereas the other end of bore 45 faces end 44 of contact 41.

In operation, inertia actuated switch means 40 is operative in the presence of a deliberate, rapid acceleration and/or deceleration of housing 11 having a predetermined minimum magnitude for momentarily connecting lead 34 to power cells 15 to complete the electrical circuit between power cell 15 and light 19 or display 18. For this purpose, spring 41 is normally biased, by adjusting the configuration thereof, so as to be spaced from perimeter 28 of cell 15, in between cell 15 and movable hammer means 46. By adjusting the thickness and stiffness of contact 41, no practical amount of inertia will cause movement of end 44 thereof into contact with perimeter 28 of cell 15. Furthermore, hammer means 46 would be selected so that its weight alone is insufficient to move end 44 of spring 41 into contact with perimeter 28 of power cell 15. These factors prevent switch means 40 from being unintentionally actuated in the presence of normal movements of the wrist.

On the other hand, movable hammer means 46 should have a sufficient density so that in the presence of an acceleration or deceleration of predetermined minimum magnitude in the direction of the longitudinal axis of hammer means 46, hammer means 46 strikes end 44 of contact 41, driving end 44 into contact with perimeter 28 of cell 15, as shown in phantom in FIG. 3. Such an acceleration or deceleration of predetermined minimum magnitude can be caused by a flicking of the wrist, not a naturally occurring movement, so that switch means 40 is actuated only when desired and with a minimum of undesired occurrences. Switch 20′ of FIG. 3 can be used to de-actuate the means 40 during periods of unusual physical exertion, such as when participating in a sports event. In the specific embodiment of FIG. 3, switch 20′ is schematically shown in lead 33 between the actuating means and power source second terminal 30.

Contact 41 and hammer means 46 may be made from any suitable materials. Contact means 41 must be electrically conductive and a suitable material is silver. Since hammer means 46 should have a high mass in spite of its small size, suitable materials are tungsten and brass.

Inertia actuated switch means 40 of FIG. 3 was designed primarily to render it compatible with existing electronic quartz watches. However, if such limitation is neglected, a more generalized configuration for an inertia actuated switch means is shown in FIG. 4, such switch means being generally designated 50. More specifically, inertia actuated switch means 50 includes an electrically conductive housing 51 having a generally trapezoidal shape. Switch means 50 includes a first electrical terminal 52 electrically connected to housing 51 and a pair of second electrical terminals 53 and 53′ which are electrically insulated from housing 51. Electrical leads 54, 55, and 55′ permit connection to terminals 52, 53, and 53′, respectively. Switch means 50 also includes an electrically conductive, movable contact 56 which may be a leaf spring, one end of which is mechanically and electrically connected to housing 51 and the body of which extends through the center of housing 51 so as to be spaced from both terminals 53 and 53′. The free end of movable contact 56 may have electrically conductive weights 57 on opposite sides thereof, positioned so as to contact terminal 53 or 53′ as contact 56 moves from one side of housing 51 to the other.

In operation, the combination of spring 56 and weights 57 would have the same operating characteristics as contact 41 and hammer means 46 of switch means 40. Thus, in the presence of a deliberate, rapid acceleration and/or deceleration of housing 51 in one of the opposed directions of arrows C, one of weights 57 will be moved into contact with one of terminals 53 or 53′ completing an electrical circuit between lead 54 and one of leads 55 or 55′, which would normally be connected together. A particular advantage of switch means 50 is that it operates in the presence of an acceleration or deceleration in either of two opposed directions whereas switch means 40 operates in the presence of a suitable force in only one direction.

Referring now to FIGS. 1, 3 and 5, actuating mechanism 21 may include, in addition to or instead of switch means 40 or 50, a pressure actuated switch means, generally designated 60, connected to clasp 13 or one of band sections 12A or 12B, and being operative in the presence of pressure applied thereto by the wrist to momentarily complete the circuit between power cell 15 and display 18 or light 19. More specifically, lead 34, shown in FIG. 3, may be connected to a jack socket 61 mounted in member 25, jack socket 61 being operative to receive a jack plug 62 connected to one end of an electrical lead 63. As shown in FIGS. 1 and 5, electrical lead 63 runs along one of band sections 12A or 12B, either internally or externally thereof, and the other end thereof is connected to switch means 60.

Recalling that it is only necessary to connect lead 34 to housing 11 in order to complete the electrical circuit between power cell 15 and display 18 or light 19, the same result is achieved by connecting electrical lead 63 to clasp 13 or band 12 since all such elements are typically made from metal, are electrically conductive, and are connected to housing 11. Thus, positioned on the inside surface of electrically conductive clasp 13 is a strip of dielectric tape 64 having a window 65 in the center thereof. Positioned on top of dielectric tape strip 64, above window 65, is a metallic terminal 66 which is connected to electrical lead 63, at 67. A further strip of dielectric tape 68 covers the entire assembly.

In operation, dielectric tape strip 64 maintains a small space between the inner surface of clasp 13 and terminal 66. On the other hand, the spacing is small enough that when pressure is applied to terminal 66, in a direction to urge it towards clasp 13, such as may be exerted by pressing clasp 13 between the wrist and a rigid support surface, terminal 66 readily flexes through window 65 and into contact with the inner surface of clasp 13. In this manner, a connection is completed from portions 27–29 of power cells 15 through housing 11, band 12, clasp 13, terminal 66, electrical lead 63, jack members 61 and 62, electrical leads 32–34, light 19, and timer 20 to portion 31 of power cell 15 to activate light 19 in the manner described previously.

Referring now to FIG. 6, there is shown a technique for connecting pressure actuated switch means 60 to housing 11 which eliminates the necessity for an electrical lead 63 between housing 11 and switch means 60.

More specifically, while band section **12B** remains electrically connected to housing **11**, band section **12A** is electrically insulated both from housing **11** and from band section **12B**. This may be achieved by connecting one end **70** of band section **12A** to an electrically insulating pin **71**, the opposite ends of which are connected to housing **11**, and by positioning an insulating washer **73** between each side of end **70** of band section **12A** and housing **11** to complete the electrical insulation. Thereafter, lead **34** of FIG. **3** may be connected to one end of a spring **74**, the body of which is mounted in but electrically insulated from housing **11**. On the other hand, the other end of spring **74** rests against end **70** of band section **12A** so as to complete an electrical connection between lead **34** and electrically conductive band section **12A**.

At the other end of band section **12A**, clasp **13** would be an electrically insulating member so as to normally prevent contact between sections **12A** and **12B**. On the other hand, connection could be made through window **65** and terminal **66** as described previously. Thus, in the presence of a pressure applied to switch means **60**, band sections **12A** and **12B** are electrically connected, completing the circuit from electrical lead **34** to housing **11** and portions **27–29** of power cells **15** to actuate light **19**, as described previously.

While the invention has been described with respect to the preferred physical embodiments constructed in accordance therewith, it will be apparent to those skilled in the art that various modifications and improvements may be made without departing from the scope and spirit of the invention. Accordingly, it is to be understood that the invention is not to be limited by the specific illustrative embodiments, but only by the scope of the appended claims. In this respect, the term "illuminating" when used is meant to include "activating" such as used with LED's as well as illuminating the liquid crystals as described herein.

I claim:

1. In a timepiece adapted to be worn on the wrist and including a power source having first and second electrical terminals, a display, means for illuminating said display, and actuating means for connecting said power source to the illuminating means to energize same, the improvement wherein said actuating means comprises:

inertia actuated switch means including a movable contact; spring said movable contact being designed and mounted to be biased out of contact with said first terminal, said illuminating means being connected between said movable contact and said second terminal so that engagement of said first terminal by said movable contact completes a circuit from said power source through said illuminating means; and

movable hammer means, said movable contact being positioned between said movable hammer means and said first terminal, said hammer means being adapted to move said movable contact into engagement with said first terminal in the presence of a deliberate rapid acceleration and/or deceleration of said wrist having a predetermined minimum magnitude.

2. In a timepiece according to claim **1**, the improvement wherein the weight of said hammer means is insufficient to move said movable contact into contact with said first terminal in the absence of an acceleration or deceleration thereof in the direction of movement thereof in excess of said predetermined minimum magnitude.

3. In a timepiece according to claim **1**, an On/Off switch connected between said power source and actuating means for breaking the connection between said movable contact and said second terminal when it is desired not to use said inertia actuated switch means.

* * * * *