United States Patent [19]

Nasiatka

[11] **3,910,324**

[45] **Oct. 7, 1975**

[54] **ROTARY ENTRY FASTENER DRIVING TOOL**

[75] Inventor: **John R. Nasiatka,** Northbrook, Ill.

[73] Assignee: **Duo-Fast Corporation,** Franklin Park, Ill.

[22] Filed: **Apr. 29, 1974**

[21] Appl. No.: **464,914**

[52] **U.S. Cl.** ..... **144/32;** 226/62; 227/95; 227/136; 29/211 R; 29/240; 221/71; 221/74; 206/347

[51] **Int. Cl.**[2] **B25B 23/04;** B65D 85/24

[58] **Field of Search** ..... 144/32; 227/95, 136; 226/62; 29/240, 432, 429, 431, 211 R, 526; 221/70, 71, 74; 206/338, 341, 347

[56] **References Cited**

UNITED STATES PATENTS

2,009,580	7/1935	Govanus	227/136
2,777,484	1/1957	Groneman	144/32
3,543,987	12/1970	Obergfell	227/136
3,550,831	12/1970	Obergfell	227/136
3,554,246	6/1968	Halstead	144/32

FOREIGN PATENTS OR APPLICATIONS

1,934,559	1/1970	Germany	144/32

Primary Examiner—Robert L. Spruill
Assistant Examiner—W. D. Bray
Attorney, Agent, or Firm—Mason, Kolehmainen, Rathburn & Wyss

[57] **ABSTRACT**

A rotary entry fastener driving tool includes a nose assembly defining a feed path for a carrier strip along which a series of threaded fasteners are frictionally retained. A driver is movable along a drive channel through the nose assembly in a drive stroke wherein it engages a fastener held in a drive position, removes the fastener from the strip, and drives the fastener into a workpiece. The fastener is displaced out of alignment with the driver during release from the strip, and in order to prevent driving of the fastener while misaligned, the nose assembly is provided with a workpiece engaging projection. The projection prevents engagement of the fastener with the workpiece until after the fastener is released from the carrier strip and is realigned with the driver. A pawl lever advances the strip in increments between drive strokes in order to advance fasteners in sequence to the drive position. A cam surface on the nose assembly prevents the lever from releasing the strip before each fastener is properly positioned. The strip is provided in a relatively short length and is supported entirely by its engagement with the nose assembly.

19 Claims, 15 Drawing Figures

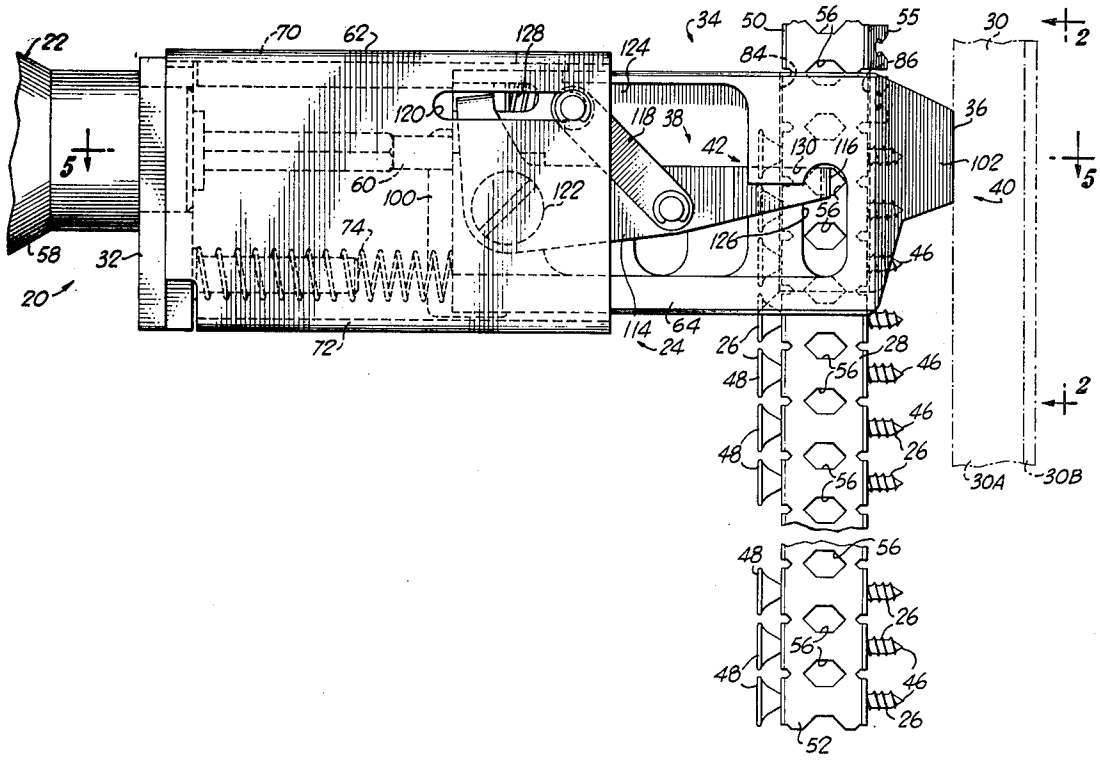

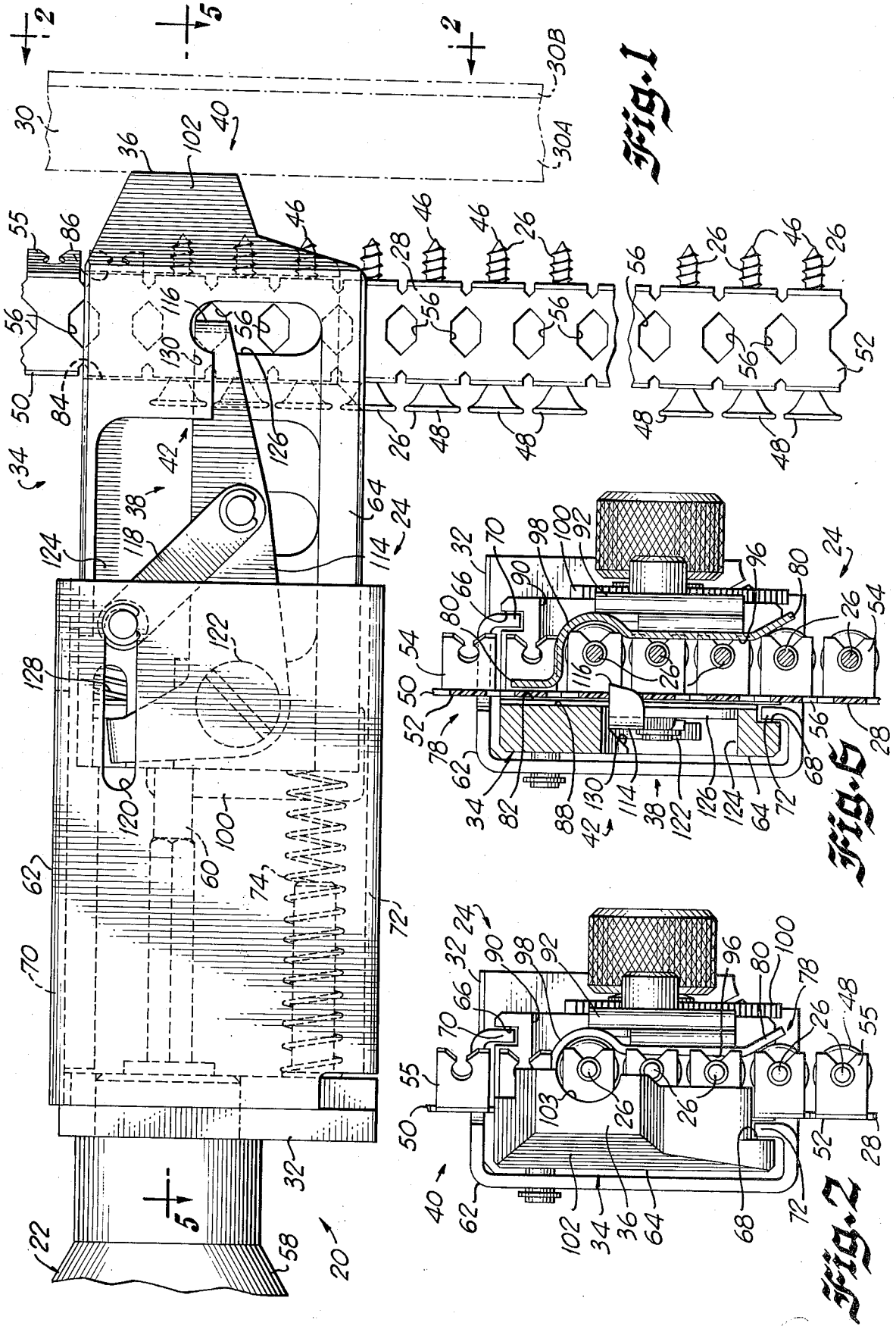
Fig. 1
Fig. 5
Fig. 2

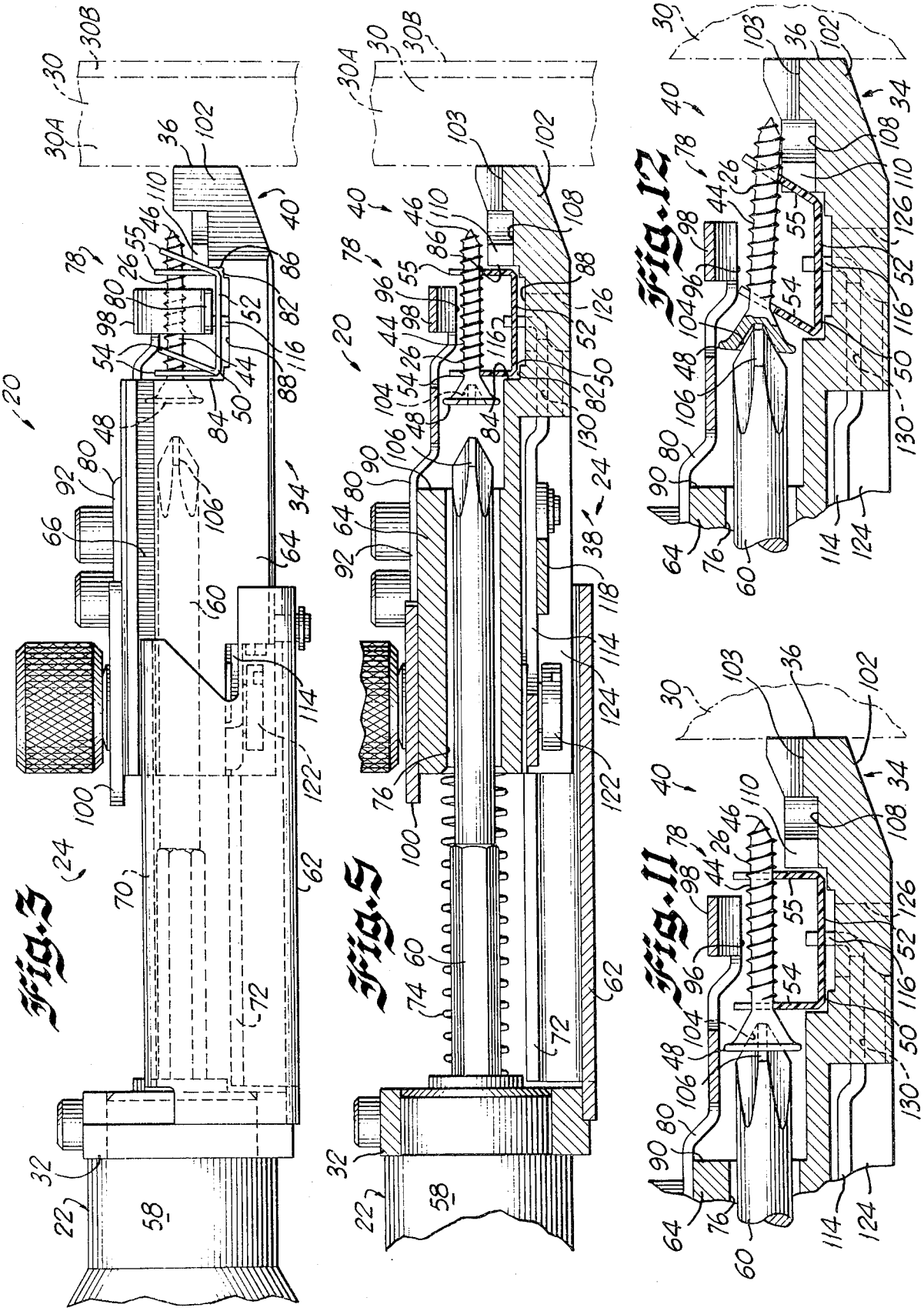
Fig. 3
Fig. 5
Fig. 11
Fig. 12

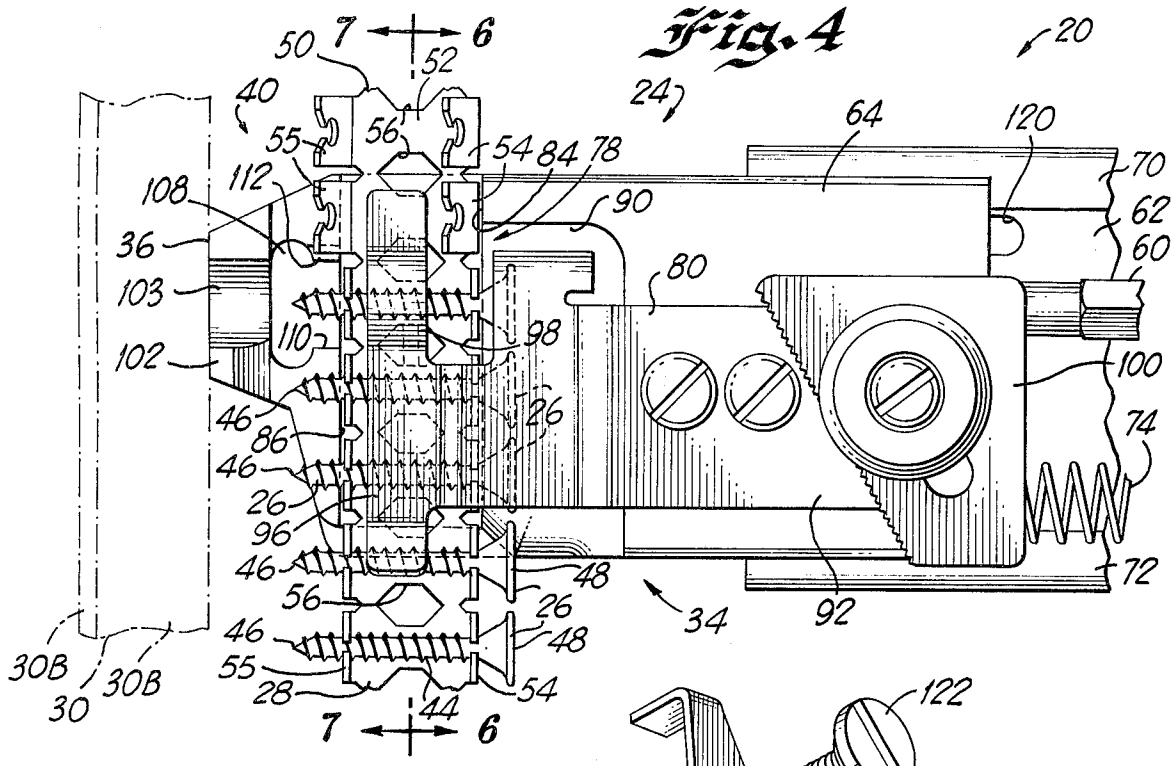

Fig. 4

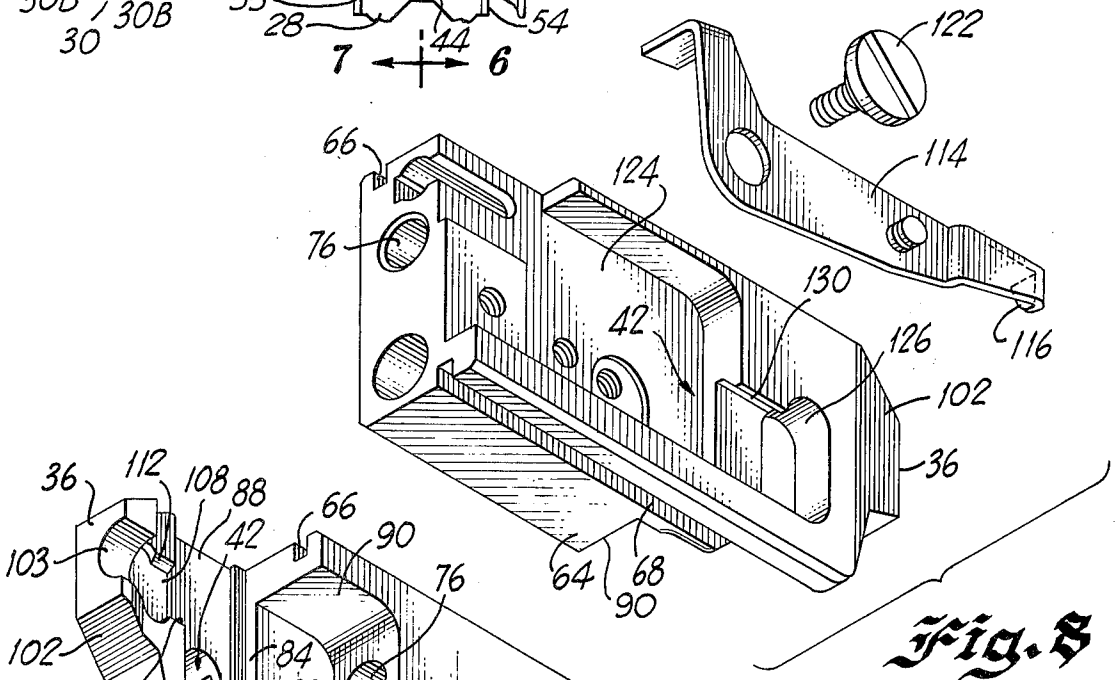

Fig. 8

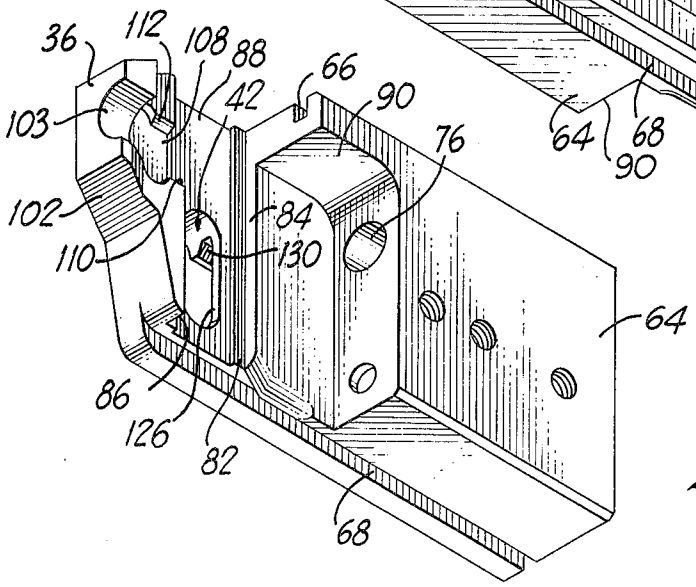

Fig. 9

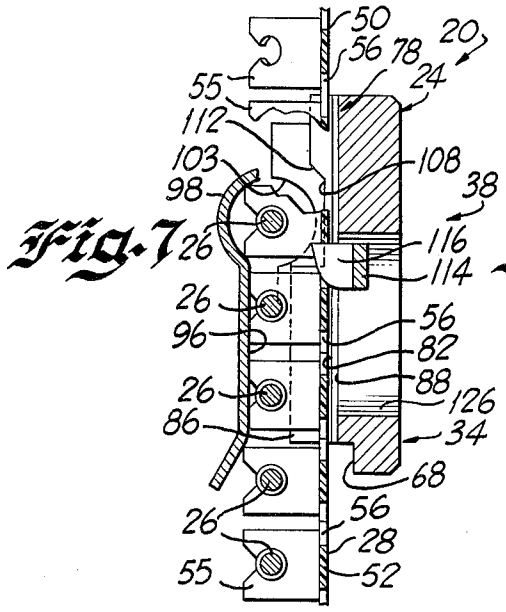

Fig. 7

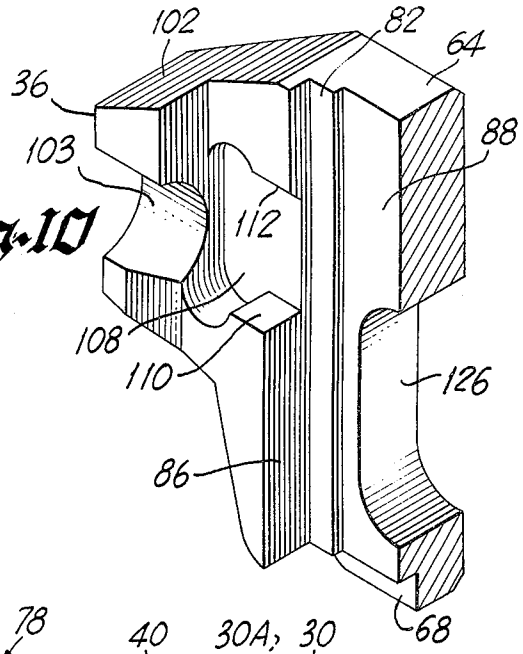

Fig. 10

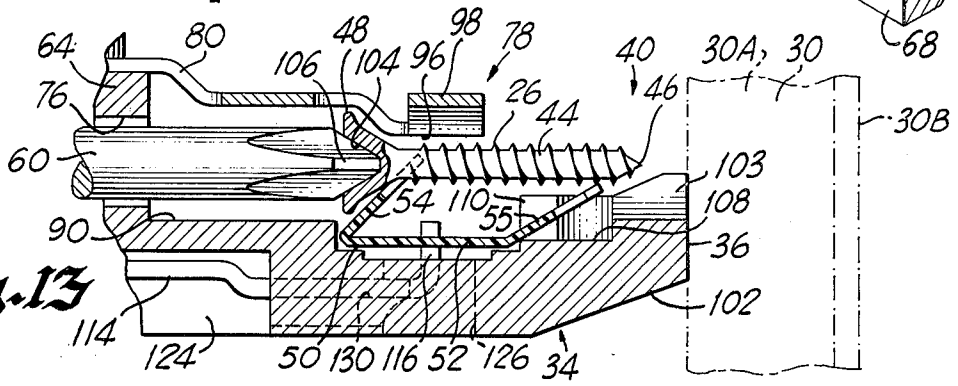

Fig. 13

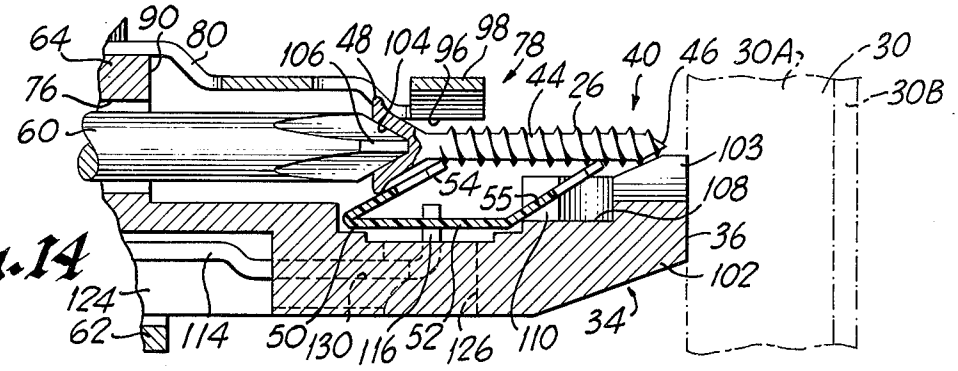

Fig. 14

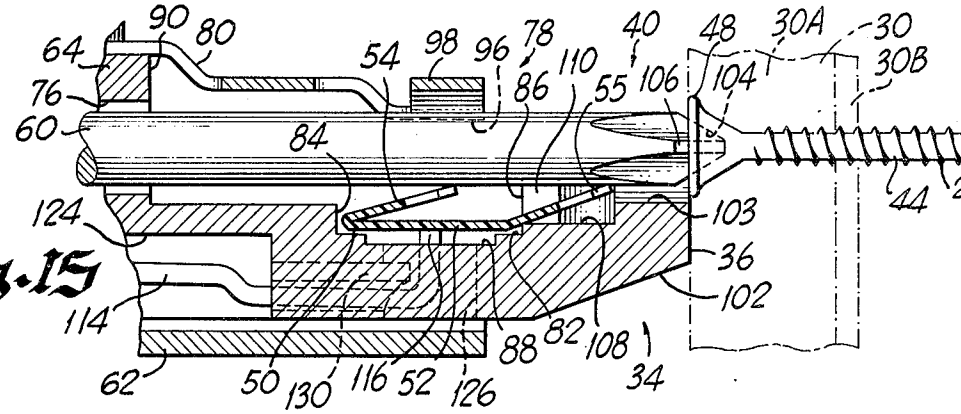

Fig. 15

ROTARY ENTRY FASTENER DRIVING TOOL

The present invention relates to fastener driving apparatus, and more particularly to improvements in apparatus for feeding rotary entry fasteners from a strip and driving them into a workpiece.

In a copending United States patent application of Frank R. Potucek and Allen R. Obergfell, Ser. No. 412,684, filed on Nov. 5, 1973 and entitled "Fastener Feed Apparatus And Method," there is disclosed a feed assembly for supplying rotary entry fasteners for sequential driving by a power screwdriver tool. The feed assembly intermittently advances threaded fasteners releasably retained in a carrier strip and locates them in a drive position. The carrier strip may be of the type disclosed in a United States patent application of Frank R. Potucek, filed contemporaneously herewith and entitled "Rotary Entry Fastener Carrier And Strip."

The apparatus disclosed in the above designated Potucek and Obergfell application is a readily portable device and thus has important advantages, for example, in the mounting of drywall or other panels in modern building construction. When used for this or similar purposes, the tool may not always be positioned perpendicular to the panel surface during driving of a fastener. A possible result of holding the tool at an angle to the workpiece with the apparatus disclosed in the Potucek and Obergfell application is that when the fastener is started into the workpiece it may be out of alignment with the driver bit. This is undesirable and may result in improper or incomplete driving of the fastener.

An object of the present invention is to provide a fastener driving apparatus wherein proper alignment of each fastener with the driver member is assured even when the tool is not held in a predetermined position relative to the workpiece. Another object is to provide a fastener driving apparatus wherein a fastener may be displaced out of proper alignment when removed from a fastener strip, but wherein the fastener is realigned prior to its engagement with a workpiece.

The feed mechanism disclosed in the Potucek and Obergfell application, and more particularly that illustrated in FIGS. 1–18 thereof, includes a pawl lever movable between cocked and home positions for advancing the carrier strip to locate individual fasteners in a drive position. During movement of the strip, the pawl lever is biased by a spring into engagement with the carrier strip. Under some conditions it may be possible for dirt or debris to interfere with proper operation of the lever and to cause the pawl to become disengaged from the strip prior to complete movement of the strip through the desired increment of movement.

Another object of the present invention is to provide a fastener feeding assembly wherein complete advancement of a strip of fasteners through a desired increment of movement is reliably carried out. Another object is to provide for mechanical and positive engagement of the feeding mechanism with a fastener strip during a fastener feeding operation.

In the apparatus disclosed in the Potucek and Obergfell application identified above, the strip of fasteners is provided in the form of a coil contained in a magazine from which the strip is fed to a nose assembly of the fastener feeding apparatus. Under some circumstances, the weight and size of the magazine and coil of fasteners may be undesirably large. In addition, for

some purposes fewer fasteners may be required than the relatively large number included in a coil.

Another object of the present invention is to provide a novel arrangement for supplying fasteners to a fastener driving tool characterized by light weight and ease of handling.

A more general object of the present invention is to provide improvements in rotary entry fastener driving apparatus, and more particularly to the apparatus disclosed in the above designated Potucek and Obergfell patent application.

In brief, in accordance with the above and other objects of the present invention, there is provided a fastener driving apparatus for driving fasteners from a strip of the type including hinged tabs having slots for releasably retaining fasteners in the strip. A housing, for example the housing of a power screwdriver or the like, supports a fastener driver member. A nose assembly is supported on the housing and defines a drive channel for movement of the driver member. The nose assembly defines a feed path for the fastener strip including a feed position located in the drive path wherein a fastener is held by the tabs in alignment with the driver member. During a drive stroke, the driver member engages the fastener, removes it from the strip, and drives it into a workpiece.

In accordance with the invention, the nose assembly is provided with a projection having a workpiece engaging surface. The driver member is provided with a drive bit engageable with the head of the fastener, and the bit and fastener head are contoured so that the fastener head cannot move laterally relative to the bit, and so that the bit urges the fastener into alignment with the driver member. Although during removal of the fastener from the tabs the fastener may become misaligned, the projection prevents engagement of the fastener with the workpiece until after the fastener is properly realigned relative to the driver member.

The nose assembly is mounted for reciprocal movement toward and away from the housing as the tool is moved toward the workpiece in a drive stroke and is then withdrawn from the workpiece. A pawl mounted on the nose assembly is engageable with the strip and is moved between cocked and home positions in response to relative movement of the nose assembly and the housing. A cam is provided for positively and mechanically holding the pawl in engagement with the strip as the strip is moved to advance a fastener to the drive position.

In accordance with a feature of the invention, the fastener strip is provided in a relatively short length rather than in an elongated coil. The strip is supported exclusively by its engagement with the nose assembly, and that portion of the strip extending from the nose assembly is otherwise unsupported.

The invention together with the above and other objects and advantages thereof may be best understood from consideration of the embodiment of the invention illlustrated in the drawings, wherein:

FIG. 1 is a side elevational view of a rotary entry fastener driving tool constructed in accordance with the present invention;

FIG. 2 is an end elevational view taken from the line 2—2 of FIG. 1;

FIG. 3 is a top elevational view of the tool of FIG. 1;

FIG. 4 is a fragmentary side elevational view of the tool taken from the side opposite that illustrated in FIG. 1;

FIG. 5 is a sectional view taken along the line 5—5 of FIG. 1;

FIG. 6 is a sectional view taken along the line 6—6 of FIG. 4;

FIG. 7 is a sectional view taken along the line 7—7 of FIG. 4;

FIG. 8 is an exploded perspective view illustrating the nose block and pawl lever of the tool of FIG. 1;

FIG. 9 is a perspective view of the nose block illustrating the side opposite that shown in FIG. 8;

FIG. 10 is an enlarged fragmentary perspective view of the front end portion of the nose block; and

FIGS. 11–15 are sectional views on an enlarged scale similar to a portion of FIG. 5 and illustrating components of the tool in the positions assumed at sequential times during a fastener driving operation.

With reference now to the accompanying drawings and initially to FIGS. 1–6, there is illustrated a rotary entry fastener driving tool designated in its entirety by the reference numeral 20 and constructed in accordance with the principles of the present invention. The tool 20 includes a rotary entry fastener driving apparatus 22 which may comprise a power screwdriver or the like of conventional construction, and of which only a fragment is illustrated. Associated with the power screwdriver 22 is a fastener feed assembly generally designated as 24 serving to feed individual fasteners 26 from a fastener strip 28 into driving position relative to the power screwdriver 22 whereupon the fasteners 26 are driven by the tool 22 into a workpiece, such as the workpiece 30 illustrated in broken lines in FIGS. 1, 3–5 and 11–15.

The present invention relates to improvements in the fastener driving apparatus disclosed in copending application Ser. No. 412,684, filed Nov. 5, 1973 of Frank R. Potucek and Allen R. Obergfell entitled "Fastener Feed Apparatus And Method." In many respects the tool 20 is similar to the apparatus shown in FIGS. 1–18 of the Potucek and Obergfell application. During the ensuing description of the tool 20 of the present invention, certain elements of the tool not essential to an understanding of the present invention are not described in detail. For a more detailed description of the structure and operation of these portions of the tool, reference may be had to that copending application.

In general, the feed assembly 24 includes a base member 32 adapted to be mounted to the power screwdriver 22 in order to support the assembly 24 in position. A nose assembly 34 includes a workpiece engaging surface 36, and the base 32 and nose assembly 34 are movable relative to one another as the tool 20 is moved toward and then withdrawn from the workpiece during and following a fastener driving operation. A feed mechanism generally designated as 38 operates in response to relative movement of the nose assembly 34 and the base 32 for incrementally advancing the fastener strip 28 in order to locate individual fasteners in sequence for driving by the power screwdriver 22.

In accordance with one aspect of the present invention, the nose assembly 34 is provided with a positioning structure generally designated as 40 providing important advantages in the use of the tool 20. The structure 40 assures that each fastener 26 is properly aligned and properly driven into the workpiece 30 even when the tool 20 is not held perpendicular to the workpiece 30. Moreover, the structure 40 assists the user of the tool 20 in applying each fastener 26 to the desired point and also permits use of the tool 20 in a tilted or inclined position without interference between the strip 28 and the surface of the workpiece 30.

In accordance with another feature of the present invention, the feed mechanism 38 is provided with a positve and mechanical holding arrangement generally designated as 42 for insuring that the strip 28 is fed properly prior to each fastener driving operation. The holding structure 42 prevents interference with the feed mechanism 38 which might otherwise result from the presence of construction debris, dirt or other foreign material.

Another feature of the present invention resides in the configuration of the fastener strip 28 in combination with the tool 20. More specifically, in the above identified Potucek and Obergfell application, fasteners are provided in a strip of considerable length formed into a coil and held in a magazine supported below the base 32. This construction results in substantial weight and may produce undesirable operator fatigue, particularly when the tool is used in an overhead position or the like. In addition, this arrangement adds to the overall size of the tool and limits its usefulness in confined areas.

In order to avoid excessive weight and size, in accordance with the present invention the strip 28 is provided in a relatively short length. For example, the strip may be provided in a length capable of supporting in the range of perhaps one dozen or a few dozen fasteners 26. In addition, in accordance with the invention, the strip 28 is supported only by its engagement with the feed assembly 24, and the portions of the strip extending from the nose assembly 34 are otherwise unsupported.

In the illustrated arrangement, each fastener 26 is a rotary entry fastener of the type commonly known as a drywall screw and includes a shank portion 44 at least a portion of which is threaded, a tip 46 at the entry end of the shank 44, and a head 48 at the opposite end of the shank. The strip 28 includes a carrier member 50 in the form of an elongated strip of flexible plastic material including a base or web portion 52. Upper and lower tab members 54 and 55 are resiliently hinged to the opposite edge of the web 52 for pivotal movement relative thereto. Each tab 54 and 55 is provided with a slot structure and each pair of one tab 54 and one tab 55 frictionally retains a fastener 26 in position along the strip 28.

The web 52 is provided with a series of openings 56, one corresponding with each pair of tab members 54 and 55. As appears below, the strip 28 is advanced by engagement of the feed mechanism 38 with the openings 56. The carrier 50 and strip 28 may be of the construction disclosed in a copending United States patent application of Frank R. Potucek entitled "Rotary Entry Fastener Carrier And Strip," filed contemporaneously with the present application. Reference may be had to the Potucek application for a further description of the structure of the carrier 50 and the strip 28.

The power screwdriver 22 may take any conventional form. In the illustrated arrangement, the device 22 is a power screwdriver adapted for the driving of fasteners to attach drywall panels 30A to metal studs 30B. The tool includes a housing 58 containing a suitable

motor coupled by a conventional depth sensitive clutch assembly to a driver member **60** extending from the housing **58.** The depth sensitive clutch assembly functions in known manner to couple the driver member **60** to the tool motor for rotation of the driver member in response to pushing of the driver member and fastener against the workpiece **30.** Moreover, the clutch assembly uncouples the driver member from the motor when the fastener is driven to a desired depth. One example of a tool of this character provided with a depth sensitive clutch is the Model **2035** screwdriver manufactured and sold by the Black & Decker Manufacturing Company, Towson, Md. 21204, illustrated in its catalog No. PE-3 (7/73 Supplement) BP. Proceeding now to a more detailed description of the structure of the feed assembly **24,** the base member **32** comprises a block-like body adapted securely to be fastened to the housing **58** of the power screwdriver **22.** Fixed to the base member **32** is a slide member **62** supporting the nose assembly **34** for movement toward and away from the base member **32** and power screwdriver **22.** The major structural component of the nose assembly **34** is a nose block **64.** The nose block **64** includes a pair of grooves or slots **66** and **68** for slidably receiving a pair of runners or flanges **70** and **72** of the slide member **62.** In order to bias the nose block **64** away from the base member **32,** a return spring **74** is held in compression between these elements.

In order to engage and drive a fastener **26** from the nose assembly **34,** the driver member **60** extends through the base member **32** in the direction of the nose block **64.** Movement of the driver member through the block **64** is accommodated by means of an opening or drive channel **76** extending through the nose block **64.**

In order to permit feeding of the fastener strip **28** through the nose assembly **34** for registration of the fasteners **26** in sequence with the driver member **60,** a feed path **78** is defined by the nose assembly **34,** and more specifically by the nose block **64** and by a guide member **80** mounted on the block **64.** As best appears in FIGS. **3** and **5,** the feed path **78** comprises a recess or opening extending through the block **64** in a direction transverse to and intersecting the drive channel **76.** The web **52** and tab members **54** and **55** of the carrier **50** are slidably received and retained in the path **58** by means of a base wall **82** and a pair of side walls **84** and **86,** the base wall **82** being cut away as indicated by the reference numeral **88** in FIGS. **9** and **10** to provide clearance beneath the web **52.** A recess **90** is provided to permit entry of the fastener heads **48** into the nose block **64.**

Guide member **80** cooperates with the nose block **64** in defining the feed path **78,** and functions to guide the fastener strip **28** into the feed path and to retain the strip in the path. The guide member **80** includes a foot portion **92** fastened to the block **64,** together with a guiding and shielding structure serving to guide the strip **28** along the path **78** and to cover the recess **90.** As appears best in FIG. **6,** the guide **80** includes a guide surface **96** overlying the fastener shanks **44** and holding the carrier **50** in place against the walls **82, 84** and **86.**

Upon insertion of the strip **28** into the feed path **78,** a first fastener **26** of the strip is located in a drive position in line with the driver member **60** and with the drive channel **76.** A generally rounded segment **98** of the guide member **80** surrounds the drive position and provides a path for movement of the fastener head from the block **64** and into the workpiece **30.**

After the strip **28** has been inserted into the feed path **78** with a fastener **26** in the drive position aligned with the drive member **60,** a fastener driving operation may be carried out. During this driving operation, the workpiece engaging surface **36** is placed against the workpiece **30,** and the screwdriver **22** is pressed in order to move the base member **32** toward the nose assembly **34.** The driver member **60** moves through the drive channel **76** into engagement with the fastener **26.** The fastener **26** is removed from the carrier **50** and is moved into engagement with the workpiece **30.** Axial force against the driver member **60** operates the depth sensitive clutch of the screwdriver **22** to produce rotation of the driver member. The fastener **26** is driven to a predetermined depth at which time an adjustable stop member **100** mounted on the nose block **64** engages the base member **32** and the depth sensitive clutch is disengaged. At this point the screwdriver **22** is withdrawn away from the workpiece **30,** the return spring **74** causing the nose assembly **34** and the base member **32** to separate.

In accordance with the present invention, the positioning structure **40** is provided for assuring that the fastener **26** is driven completely and properly into the workpiece **30.** During the driving operation, as the fastener **26** is removed from the carrier **50,** the fastener **26** is displaced to a nonaligned position relative to the driver member **60.** Were the tool **20** consistently to be held perpendicular to the workpiece **30,** the arrangement illustrated in the above designated Potucek and Obergfell application would maintain the fastener **26** in proper alignment since the fastener tip in that construction enters the workpiece almost immediately upon engagement by the driver member. However, in use of a tool such as the tool **20,** the tool commonly is held in a tilted or inclined orientation relative to the work surface. The novel positioning structure **40** of the present invention assures that the fastener **26** is aligned properly with the bit prior to driving in any position of the tool **20.**

In the illustrated arrangement, the positioning structure **40** takes the form of a projection **102** formed on the forward end of the nose block **64** and providing a space or clearance through which the fastener **26** moves from the drive position before it engages the workpiece **30.** The workpiece engaging surface **36** is defined on the end of the projection **102,** and in accordance with the invention, the projection **102** is generally symmetrically arranged around the path through which the fastener **26** moves into the workpiece. As a result, the operator can visually align the tool with the workpiece and drive the fastener **26** into any desired point on the workpiece. To assist in guiding the fastener **26** and driver member **60** during a drive stroke, the projection **102** includes a semi-cylindrical recess **103** aligned with and functioning as a part of the drive channel **76.**

Also in accordance with the invention, the projection **102** is somewhat tapered making it possible to drive a fastener into a confined area such as a corner or crevice. Another important function of the projection **102** is that it results in a space, as can be seen in FIG. **1,** between the tips **46** of the fasteners **26** along the strip **28** and the workpiece engaging surface **36.** As a result, if the tool **20** is tilted or tipped in use, the strip **28** and fas-

teners **26** are not interfered with or dislodged by engagement with the workpiece **30.**

The function of the positioning structure **40** in a fastener driving operation best appears with reference to FIGS. **5** and **11–15.** In FIG. **5,** a fastener **26** is illustrated in the drive position prior to the beginning of movement of the driver member **60** through a drive stroke along the drive channel **76.** In this position, the shank **44** of the fastener **26** is frictionally held in slots in one pair of tab members **54** and **55** of the carrier **50.**

As the screwdriver **22** is pressed toward the workpiece **30,** the return spring **74** is compressed and the nose assembly **34** moves toward the base assembly **32.** The driver member **60** moves into engagement with the fastener **26** as illustrated in FIG. **11.** The head **48** of the fastener **26** is provided with a drive structure **104,** and the driver member **60** is provided with a complementary drive structure **106.** The drive structures **104** and **106** may be of any suitable type, and should be of such a nature that after engagement of the driver member **60** with the fastener head **48,** the head is prevented from moving laterally with respect to the driver member **60.** The structures **104** and **106** should also be of such a nature that the fastener shank **44** is urged by interengagement of the drive structures into axial alignment with the driver member **60.** For example, the structures **104** and **106** may respectively comprise any desired type of drive socket and complementary projection, and in the illustrated arrangement the drive structure **106** of the driver member **60** comprises a Phillips driver bit while the structure **104** comprises a complementary Phillips head recess or socket.

With reference now to FIG. **12,** as the driver member **60** advances further into the drive position initially occupied by the fastener **26,** the fastener is forced toward the workpiece. Since the shank of the fastener is frictionally retained in the tab members **54** and **55,** the tab members are each caused to pivot. The head **48** of the screw is held on the drive tip **106** of the driver member **60,** but the point **46** of the fastener **26** is deflected downwardly by pivoting of lower tab **55,** and the shank **44** is tilted or inclined out of axial alignment with the driver member **60.** During this movement, as the tab **55** adjacent the tip **44** pivots downwardly pulling the shank out of alignment, the portion of the shank adjacent the head **48** is being pulled out of the other tab **54.**

After further movement of the driver member **60** relative to the fastener **26,** as illustrated in FIG. **13,** the forwardmost tab **55** abruptly releases the shank **44.** At this time, the rearward tab **54** still maintains some retention of the portion of the shank **44** adjacent the head **48.** This retention serves to hold the drive structures **104** and **106** in engagement.

As best seen in FIG. **14,** subsequently both of the tabs **54** are released. The resilient nature of the tabs and the manner in which they are pivoted causes them to continue to exert a resilient holding force maintaining the head **48** in engagement with the driver member **60.** Interaction of the drive structures **104** and **106** on the fastener head **48** and driver member **60** after release of the tab **55** causes the fastener **26** to become realigned with the driver member **60** as can be seen in FIGS. **13** and **14.** The projection **102** provides a sufficient path of movement of the fastener **26** for this realignment to take place prior to engagement of the fastener tip **46** with the workpiece **30.** Further, this realignment takes place in any position of the tool **20** relative to the workpiece **30.** In FIG. **15** the fastener **26** is illustrated fully driven into the workpiece **30,** and it can be seen that due to axial alignment of the fastener **26** in the driver member **60,** the fastener is driven properly and completely.

In order to accommodate pivotal movement of the forwardmost tab member **55,** the nose block is provided with a recess **108** best illustrated in FIG. **10.** This recess permits the tab **55** to be pivoted as the fastener **26** is extracted, and is defined in part by a stop surface **110** over which the tab **55** lies after being pivoted. This stop surface **110** prevents retrograde movement of the carrier **50** in the feed path **78** during operation of the feed mechanism **38.**

Opposite the stop surface **110,** the recess **108** is provided with an inclined cam surface **112.** This surface functions to engage the pivoted tab member **55** upon further feeding of the strip **28** and moves the tab member **55** back to a generally upright position for movement through the feed path **78.**

Turning now to a description of the feed mechanism **38,** for the most part this mechanism is similar to that incorporated in the apparatus illustrated in FIGS. 1–19 of the above referenced Potucek and Obergfell application. The feed mechanism includes a pawl lever **114** carrying a pawl **116** engageable with the openings **56** in the web **52** for advancing the strip **28** in increments along the feed path **78.** A drive link **118** causes the pawl **116** to move between a home position illustrated in the drawings and a cocked position as the base member **32** is moved toward the nose assembly **34.** Conversely, when the base member **32** moves away from the nose assembly **34,** the pawl **116** is returned in the opposite direction to the home position in order to advance the fastener strip **28** through one increment of movement. A lost motion drive slot **120** in slide **62** (FIG. **1**) is associated with the drive link **118** in order to insure that operation of the feed mechanism **38** does not interfere with the driving of a fastener **26** by the driver member **60.**

The pawl lever **114** is mounted somewhat loosely for pivotal movement on the nose block **64** by means of a shoulder screw **122.** The screw **122** and lever **114** are located in a recess **124** defined in a side wall of the block **64.** A slot **126** extends between recess **124** and the feed path **78** to enable engagement of the pawl **116** with the carrier **50.** Clearance is provided beneath the head of the shoulder screw **122** to permit movement of the pawl **116** out of the plane of the carrier web **52** during movement from the home to the cocked position. A pawl return spring **128** (FIG. **1**) serves both to bias the pawl **116** toward the home position and also to bias the pawl **116** into the plane of the carrier web **52** so that after movement to the cocked position the pawl enters the next adjacent opening **56.**

In operation, during driving of a fastener the movement of the nose assembly **34** toward the base member **32** causes the drive link **118** to rotate the pawl lever **114,** thus to move the pawl **116** to a cocked position. The lost motion connection **120** prevents movement of the pawl lever until after fastener **26** is securely started into the workpiece **30.**

After driving of the fastener **26,** the separation of the nose assembly **34** from the base member **32** releases the pawl lever **114.** The return spring **128** urges the pawl **116** into the next adjacent web opening **56,** and also rotates the pawl lever **114** in the opposite direc-

tion. Consequently, the pawl **116** is returned to its illustrated home position and advances the strip **28** through one increment of movement.

The tool **20** is adapted to be used in various types of construction operations where dust, dirt and debris may abound. It is possible for the fastener strip **28,** and particularly one or more of the openings **56,** to become fouled in such an environment. In addition, it is also possible for the recess **124** in the region of the pawl lever **114** to become clogged.

In order to prevent these adverse conditions from interfering with driving of the strip **28,** in accordance with the present invention, the holding structure **42** is provided. In the illustrated arrangement this holding structure **42** comprises a cam surface **130** defined along the recess **124** and engageable with the pawl lever **114.** As best appears in FIG. **6,** as the pawl lever returns toward its home position, it is positively and firmly engaged by the cam surface **130** so that the pawl **116** is securely held within an opening **56** in web **52.**

It should be noted that the presence of the cam surface **130** does not materially affect the initial loading of fastener strip **28** into the feed path **78.** Since the carrier **50** is formed of somewhat resilient plastic material, the web **52** is able to deform sufficiently to permit entry of the pawl **116** into the first opening **56** even though outward movement of the pawl **116** is prevented by the cam surface **130.**

Although the present invention has been described with reference to details of the illustrated embodiment, such details should not be taken to limit the invention as defined in the following claims.

I claim:

1. Fastener driving apparatus for driving headed fasteners from a strip of the type wherein fasteners are releasably held by hinged tabs extending from a web portion, said apparatus comprising:

housing means supporting a fastener drive member for movement of said drive member in a drive stroke toward a workpiece;

nose means supported on said housing means defining an unrestricted drive path for said drive member and defining a feed path for said strip including a drive position along said drive path wherein a fastener is held by the tabs in alignment with said drive member;

projection means on said nose means having a work engaging surface adpated to engage the workpiece;

bit means on said drive member constructed and arranged to prevent lateral movement of a fastener head relative to said bit while urging said fastener into axial alignment with said drive member; and

the distance between a fastener in said drive position and said work engaging surface being larger than the distance required to release the fastener from the tabs.

2. The apparatus of claim **1,** said drive path being defined in part by said projection means.

3. The apparatus of claim **2,** said projection means being generally tapered toward the point of entry of a fastener into the workpiece.

4. In combination:

a fastener having a head and a shank;

holding means for frictionally and releasably supporting said fastener in a predetermined drive position;

a drive member axially aligned with said fastener in said drive position and movable through a drive stroke through said drive position for releasing said fastener from said holding means;

bit means on said drive member engageable with said head to effect driving of said fastener, said bit means and said head cooperating to prevent lateral movement of said head relative to said bit means and to urge said fastener into axial alignment with said drive member; and

spacer means for preventing the engagement of said fastener with a workpiece until after said shank is released from said holding means.

5. The combination of claim **4,** said fastener including thread means on said shank, said bit means and said head including mating drive structure for imparting rotation of said drive member to said fastener.

6. The combination of claim **5,** said drive structure comprising interfitting socket means and projection means.

7. The combination of claim **6,** said drive structure comprising a Phillips head and driver.

8. The combination of claim **4,** said holding means comprising tab means normally disposed generally transverse to the fastener axis and pivotable about a line disposed to the side of the fastener axis.

9. The combination of claim **8,** said tab means including a pair of tabs, and slots in said tabs frictionally engaging said shank at spaced points.

10. The combination of claim **9,** resilient hinge means mounting said tabs for pivotal movement and urging said tabs toward their normal position.

11. In a tool for driving headed rotary entry fasteners from a carrier strip wherein the fastener shanks are frictionally retained in slotted tab members resiliently hinged to a web portion extending throughout the length of the strip, the combination comprising:

housing means supporting an elongated driver member extending from said housing means;

a nose structure mounted for sliding movement toward and away from said housing means;

a drive channel defined in said nose structure for movement of said driver in a drive stroke through said nose structure as said housing means moves toward said nose structure;

return means for separating said housing means and said nose structure following said drive stroke;

a feed path extending through said nose structure and intersecting said drive channel at a drive position whereat a fastener is held in alignment with said driver with its head presented toward said driver;

feed means operable in response to relative movement between said housing means and nose structure for incrementally advancing the carrier strip along said feed path between drive strokes to position successive fasteners in said drive position;

and the improvement characterized by:

said driver including bit means drivingly engageable with the fastener head and being constructed and arranged to hold the head against lateral movement across the bit while tending to urge the fastener shank into alignment with the driver;

said nose structure including recess means extending from said drive position along the drive channel in the direction of the drive stroke for permitting the carrier strip tab members to pivot during release of the fastener shank in a drive stroke; and

a workpiece engaging projection extending from said nose structure for preventing engagement of a

driven fastener until after release of the fastener from said tab members.

12. In a tool for driving headed rotary entry fasteners from a carrier strip wherein the fastener shanks are frictionally retained in slotted tab members resiliently hinged to a web portion extending throughout the length of the strip, the combination comprising:

housing means supporting an elongated driver member extending from said housing means;

a nose structure mounted for sliding movement toward and away from said housing means;

a drive channel defined in said nose structure for movement of said driver in a drive stroke through said nose structure as said housing means moves toward said nose structure;

return means for separating said housing means and said nose structure following said drive stroke;

a feed path extending through said nose structure and intersecting said drive channel at a drive position whereat a fastener is held in alignment with said driver with its head presented toward said driver;

feed means operable in response to relative movement between said housing means and nose structure for incrementally advancing the carrier strip along said feed path between drive strokes to position successive fasteners in said drive position;

and the improvement characterized by:

said carrier strip being supported exclusively by said feed path and said feed means and extending unsupported from said nose structure.

13. Apparatus for feeding a strip of fasteners in increments for sequential driving by a rotary entry fastener driving tool, said apparatus comprising:

base means adapted to be mounted on the tool;

a nose assembly having a workpiece engaging surface;

means mounting said nose assembly for movement relative to said base means so that said base means moves in one direction relative to said nose assembly when the tool is pressed toward the workpiece during a fastener driving operation;

return means for moving said base means in the opposite direction relative to said nose assembly as the tool is withdrawn from the workpiece after a fastener driving operation;

means defining a feed path through said nose assembly for supporting said strip with a fastener in the drive position;

pawl means mounted on said nose assembly and engageable with said strip, said pawl means being movable between cocked and home positions in response to movement of said base means relative to said nose assembly; and

cam means for holding said pawl means in engagement with said strip as said pawl means approaches said home position.

14. The apparatus of claim **13,** a pawl lever mounted for pivotal movement on said nose assembly, said pawl means comprising a portion of said lever.

15. The apparatus of claim **14,** a pawl return spring connected between said lever and said nose assembly for biasing said pawl means toward said home position.

16. The apparatus of claim **15,** said pawl lever being mounted for movement of said pawl transverse to said feed path out of engagement with said strip, and said pawl return spring biasing said pawl means into engagement with said strip.

17. The apparatus of claim **16,** a recess in said nose assembly containing said pawl lever, said cam means comprising a cam surface formed in a wall of said recess.

18. In a tool for driving headed rotary entry fasteners from a carrier strip wherein the fastener shanks are frictionally retained in slotted tab members resiliently hinged to a web portion extending throughout the length of the strip, the combination comprising:

housing means supporting an elongated driver member extending from said housing means;

a nose structure mounted for sliding movement toward and away from said housing means;

a drive channel defined in said nose structure for movement of said driver in a drive stroke through said nose structure as said housing means moves toward said nose structure;

return means for separating said housing means and said nose structure following said drive stroke;

a feed path extending through said nose structure and intersecting said drive channel at a drive position whereat a fastener is held in alignment with said driver with its head presented toward said driver;

feed means operable in response to relative movement between said housing means and nose structure for incrementally advancing the carrier strip along said feed path between drive strokes to position successive fasteners in said drive position.

and the improvement characterized by:

said feed means including pawl means movable along said feed path and engageable with said carrier strip for advancing said strip;

resilient means urging said pawl means toward said strip throughout its range of movement; and

holding means mechanically forcing said pawl means against said strip when a fastener is in said drive position.

19. The combination of claim **18,** said pawl means including a lever pivotally and loosely mounted on said nose structure and a cam surface defined on said nose structure and engageable by said lever as a fastener nears the drive position.

* * * * *