United States Patent [19]

Lorenz

[11] **3,910,090**

[45] **May 15, 1974**

[54] **TWO-HIGH ROLL STAND WITH ROLL ADJUSTING AND OVERLOAD PREVENTION MECHANISM**

[75] Inventor: **Horst Lorenz**, Solingen, Germany

[73] Assignee: **TH. Kieserling & Albrecht**, Solingen, Germany

[22] Filed: **May 15, 1974**

[21] Appl. No.: **469,970**

[30] **Foreign Application Priority Data**

May 23, 1973 Germany 2326140

[52] **U.S. Cl.** **72/245;** 72/248

[51] **Int. Cl.**[2] **B21B 31/26;** B21B 31/24

[58] **Field of Search** 72/245, 244, 237, 248, 72/246

[56] **References Cited**

UNITED STATES PATENTS

3,172,314	3/1965	Morgan et al.	72/237
3,336,781	8/1967	Wilson et al.	72/235
3,435,648	4/1969	Bergstrom et al.	72/246

Primary Examiner—Milton S. Mehr

Attorney, Agent, or Firm—Edward E. Sachs

[57] **ABSTRACT**

A metal working machine having a two-high rolling mill in which two horizontally spaced frames support shafts for eccentrically mounting the roll housings. The roll housings are journalled in the frames. The shafts protrude through the frames and at a common end each shaft receives a lever which in turn is connected with articulation to a linkage system which can alter the distance between the roll housings and also respond to a piston drive to provide roll overload relief.

7 Claims, 4 Drawing Figures

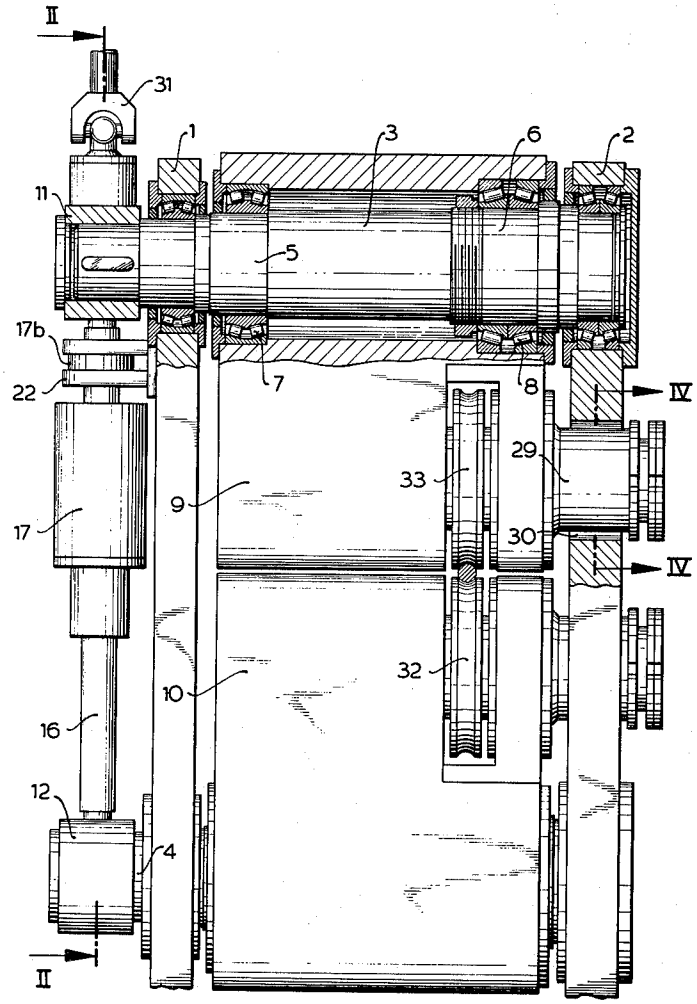

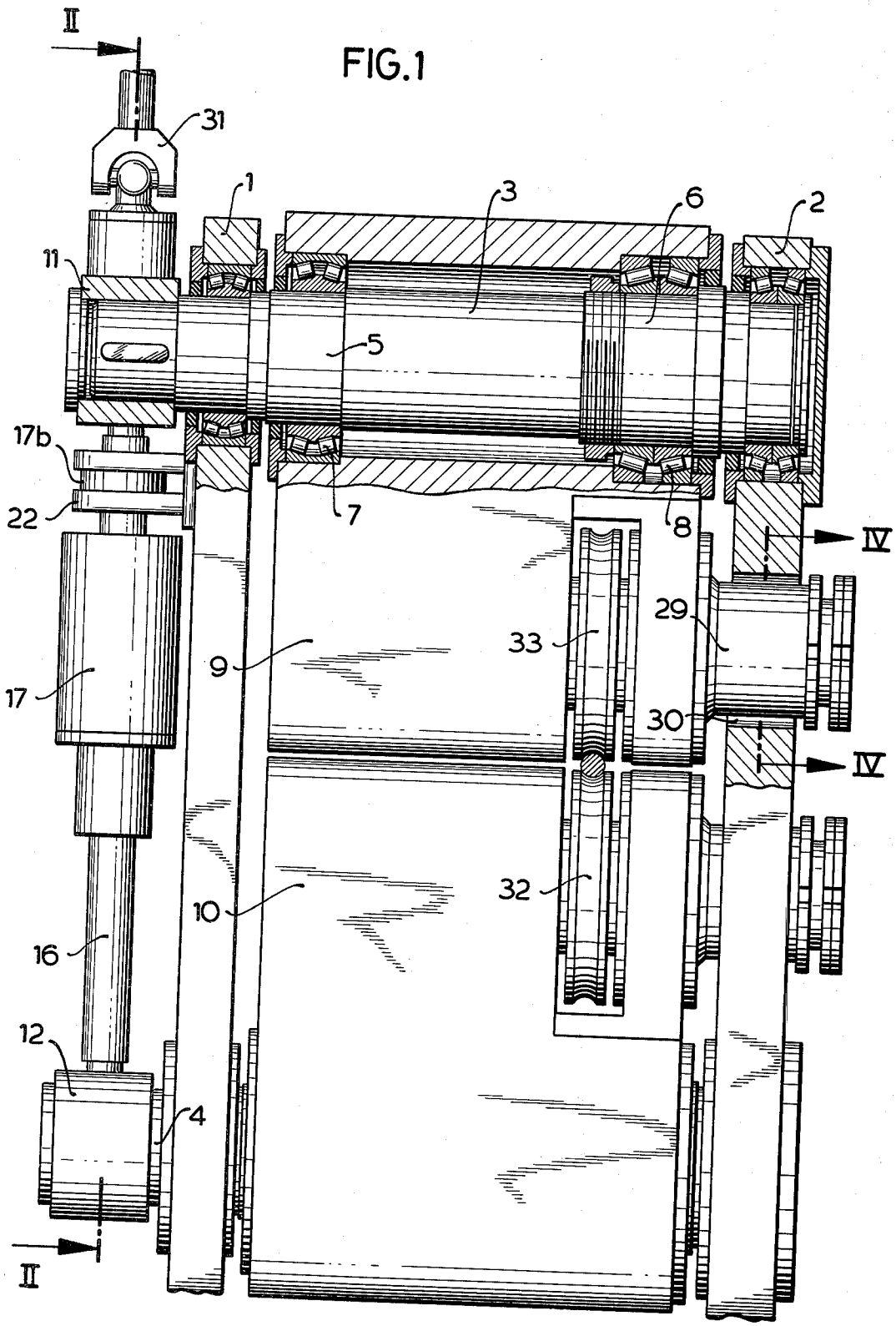
FIG.1
II
31
1
3
6
2
11
5
17b
22
7
8
IV
29
33
9
17
30
IV
32
10
16
12
4
II

FIG.4

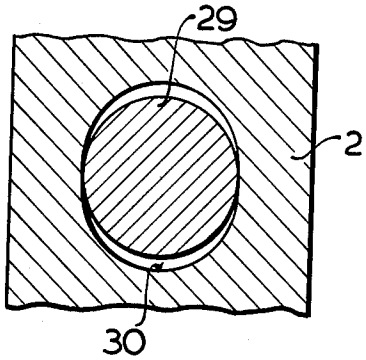

FIG.2

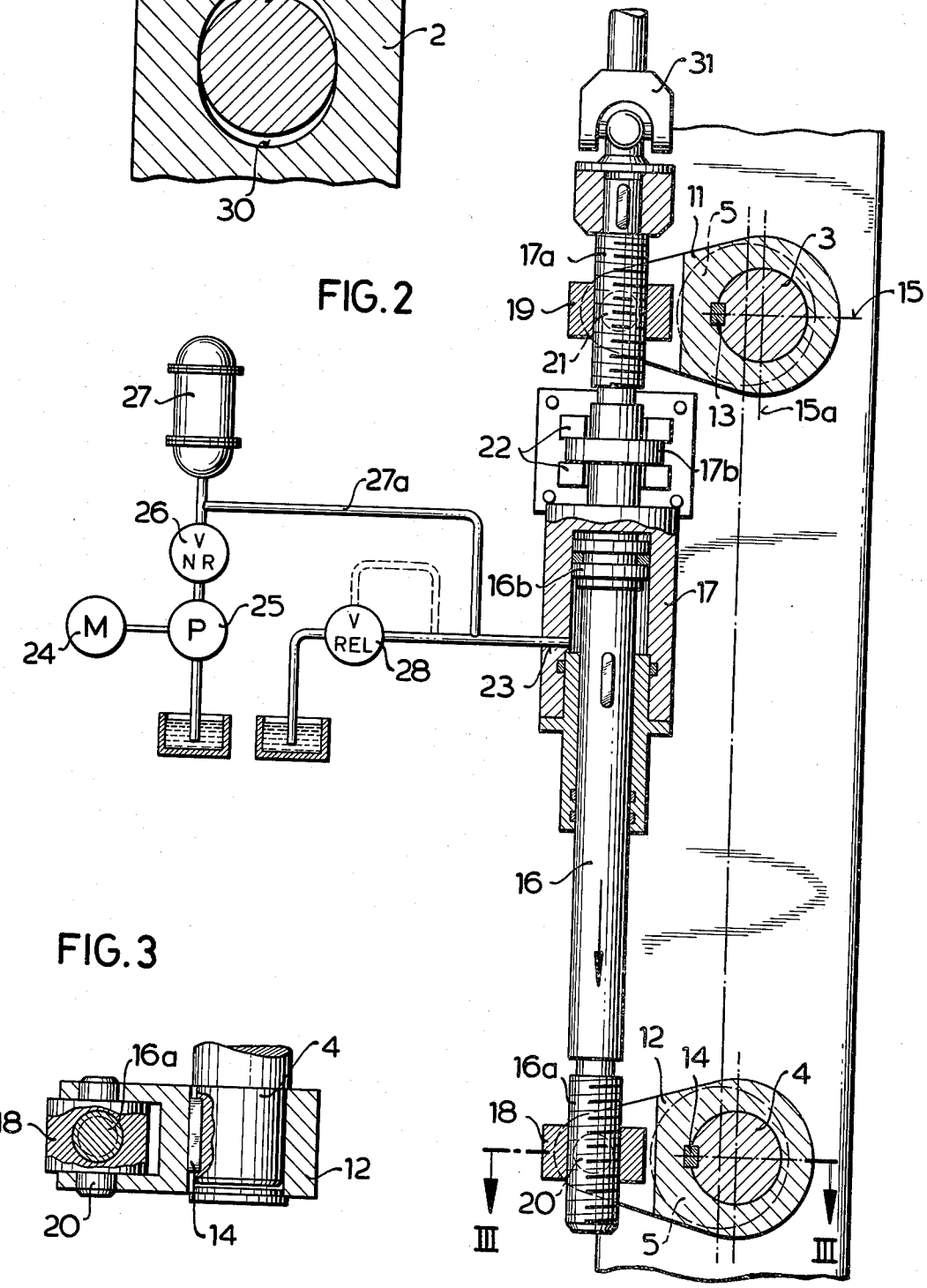

FIG.3

TWO-HIGH ROLL STAND WITH ROLL ADJUSTING AND OVERLOAD PREVENTION MECHANISM

The invention relates generally to a metal working machine and, more particularly, to a two-high rolling mill or stand having a mechanism for radially adjusting the the distance between the rolls and for preventing an overload thereof.

In the prior art a two-high rolling mill or stand is already known in which the bearings for each roll shaft are arranged in eccentrically designed housings mounted rotatably in the frames of the stand. The housings are provided externally with meshing gears with the gears of one roll engaging two pinions mounted on a shaft, so that when the shaft is rotated the rolls can be radially adjusted. For instance see German Technical Journal "Stahl und Eisen," Vol. 7, of Mar. 30, **1972.**

This type of construction has a number of disadvantages. It does, for instance, make roll changing fairly difficult. Also, it prevents the rolls from yielding in the event of an overload, since the eccentricity of the housings must be near the top or bottom dead centers; otherwise the rolls would automatically rise under the force of rolling.

Another disadvantage resides in that due to sliding friction considerable adjusting forces are necessary to adjust the rolls radially under load.

It is therefore the primary object of the present invention to provide a metal working machine which includes a two-high roll stand in which the permissible rolling force can be very accurately adjusted.

It is a further object of the present invention to provide a two-high roll stand in which all major elements thereof are securely protected against overload.

It is a still further object of the invention to provide a two-high roll stand or mill in which the position of the rolls can also be readily adjusted when under load.

An aspect of the present invention resides in providing a two-high rolling mill or stand having horizontally spaced roll stand frames with vertically spaced shafts interposed therebetween for linking the frames. Eccentric journal means are formed on each of the shafts with a lever secured at one common end to each shaft. The lever is constructed and arranged to establish a longitudinal axis whose location coincides with the main axis of the corresponding eccentric journal means. These axes define a substantially right angle with an imaginary line defined by the axis of rotation of each shaft. Articulately connected to each lever is a piston drive arrangement which includes a movable piston responsive to predetermined overload conditions.

A further aspect of the present invention resides in providing a metal working machine having an apparatus for radially adjusting the rolls of a two-high roll stand and for precluding an overload thereof in which the eccentric journals are arranged on the shafts connecting the frame members of the roll stand. The shafts receive at their free ends levers whose longitudinal axis coincides with the main axis of the eccentric members, whereby these axes and an imaginary line connecting the axes of rotation of the shafts define a substantially right angle. The levers are articulated to a threaded shaft constructed as a piston drive, the piston thereof being adapted to move, in the event of an overload, against the action of an adjustable force such as fluid pressure means or suitable springs.

Another advantage of the construction and arrangement in which the housings carry the roll shafts resides in that it facilitates the use of a rapid roll changing device, for example as described in my co-pending U.S. patent application, Ser. No. 467,632, filed May 7, **1974,** (based on a priority application in Germany, Ser. No. P 23 23 768.).

Another aspect of the present invention resides in providing a metal working machine having an apparatus of the character aforedescribed and in which, in order to adjust the rolls radially, the two portions of the threaded shaft are provided with clockwise and counter-clockwise threads, each of which engage a collar pivotably secured to the levers. One of these threaded portions is provided with a shoulder bearing on each axial face against a stationary abutment. The housings are retained in a vertical position by means of journals formed thereon and mounted within one of the frames. The rolls may thus be radially adjusted by rotating the threaded shaft clockwise or counter-clockwise. Any oscillation of the housings about the eccentrics is prevented.

For a better understanding of the present invention, together with other and further objects thereof, reference is had to the following description taken in connection with the accompanying drawings, and its scope will be pointed out in the appended claims.

In the drawings:

FIG. **1** is a side elevational view of the roll-stand shown partly in section;

FIG. **2** is a sectional view taken along line II—II of FIG. **1,** showing the threaded shaft connecting the levers and providing a piston drive;

FIG. **3** is a sectional view taken along line III—III of FIG. **2**; and

FIG. **4** is a sectional view taken along line IV—IV of FIG. **1,** showing additional details of the present invention.

Referring now to the drawings there is shown part of a metal working machine having horizontally spaced side frame members **1** and **2** linked together through rotatably arranged and vertically spaced shafts **3** and **4.** Each shaft is provided with two, axially spaced, eccentrically arranged journal surfaces or cams **5** and **6.** Mounted about each journal (**5,6**) is a rolling contact bearing, see **7** and **8,** whose outer races are carried in cross member roll housing **9** interposed between frame members **1** and **2,** and surrounding roller shaft **3.** While not specifically shown, shaft **4** as noted, is similarly provided with journals **5,6** and bearings **7,8** whose outer races are supported in cross-member housing **10** which surrounds shaft **4** and extends also between frames **1** and **2** in parallel to housing **9.**

One common end of shafts **3** and **4** extends beyond the housing **9,10** and frames **1,2** and protrudes therethrough to carry or mount levers **11** and **12,** respectively, which are secured to the shafts by means of wedges **13** and **14,** respectively, see FIG. **2.**

The longitudinal axis **15** of each lever **11,12** coincides with the main axis of eccentric journal surfaces **5** and **6.** For clarity of illustration the eccentric journal **5** is shown in dotted lines in FIG. **2.** Each axis **15** defines a substantially right angle with an imaginary line **15***a* defined by the axis of rotation of shaft **3**(**4**).

The levers **11** and **12** are linked together by a threaded shaft or spindle which forms a piston drive and includes a shaft-piston **16** and a hollow cylinder **17** which receives one portion of shaft-piston **16.** The opposite end of shaft-piston **16** is threaded, see **16***a*, and protrudes through and is in engagement with internally threaded collar **18.** From the cylinder **17** extends a threaded shaft extension **17***a* which is connected to a cardan shaft **31** and in engagement with the internal threads of block **19.** One of the threaded extensions (**16***a*,17*a*) has a left hand and the other a right hand external thread. In turn, the collars **19,18** are pivotably mounted about lever **11, 12** by means of pins **20,21** respectively. The cylinder **17** is formed with a radial enlargement **17***b* abutting at each axial face thereof a stationary element **22** which prohibits axial movement of member **17, 17***a* and **17***b*. The key-slot arrangement between piston-shaft **16** and the extension of the cylinder **17** permits axial movement of piston-shaft **16** but precludes relative rotation between threaded extensions **16***a*, 17*a* — which thus always rotate in unison.

When fluid pressure is supplied through bore **23** into cylinder **17,** piston portion **16***b* is in operative position as shown in the drawing. The fluid pressure is supplied by a pump **25** driven by a motor **24,** through check valve **26** and line **27***a*. Connected to line **27***a* is a hydraulic accumulator **27.** The fluid pressure is adjusted by pressure-regulating valve **28** to correspond to maximum allowable rolling forces.

The housings **9,10** are retained in a vertical plane by means of journals **29** mounted in elongated openings **30** provided in frame **2,** to prevent oscillation.

The method of operation is as follows: rotation of members **16***a*,17*a*, clockwise or counter-clockwise, by means of cardan shaft **31** and a motor, not shown, pivots levers **11,12** until the rolls have assumed their required operating positions. As long as pressure is applied to piston face **16***b*, shaft-piston **16,** lever **12,** and therefore bottom roll **32** are held in the position to which they have been adjusted. When the rolling force exceeds its permissible value, pressure-regulating valve **28** opens. This relieves the pressure in cylinder **17,** and the fluid pressure can flow back to the tank. This enables shaft **16** to move in the direction of the arrow shown in FIG. **2,** and pivots lever **12** in such a manner that the vertical distance between bottom roll **32** and top roll **33** is increased.

As a modification of the invention only one roll is radially adjustable in relation to the other. In this case, for instance, the top roll could be stationary, in which case cardan shaft **31** would be in direct communication with cylinder **17.** This eliminates lever **11** and collar **19.**

While there have been described what are at present considered to be the preferred embodiments of this invention, it will be obvious to those skilled in the art that various changes and modifications may be made therein without departing from the invention, and it is aimed, therefore, in the appended claims to cover all

such changes and modifications as fall within the true spirit and scope of the invention.

What is claimed is:

1. In a metal working machine having a two-high roll stand including a mechanism for radially adjusting and for preventing an overload of the rolls, comprising:

horizontally spaced roll stand frames;

two vertically spaced shafts interposed between and linking said frames;

eccentric journal means formed on each said shafts;

a roll housing eccentrically mounted about each shaft;

a radial roll adjustment linkage system having a lever secured at one common end to each of said shafts, each lever being constructed and arranged to establish a longitudinal axis whose location coincides with the main axis of the corresponding eccentric journal means, said axes defining a substantially right angle with an imaginary line defined by the axis of rotation of said shaft; linkage shaft means articulately connecting to each said lever for moving each lever to alter the radial distance between the roll housings;

hydraulic piston drive means including a piston formed on said linkage shaft means and responsive to predetermined roll overload conditions to act upon part of said linkage system;

and rotary drive means connecting to said lever and linkage system for controlling the rotary movement of said linkage system.

2. In a metal working machine according to claim **1,** wherein said linkage shaft means has a threaded extension at two opposite ends;

a collar threadedly mounted about each threaded extension pivotably secured to each lever.

3. In a metal working machine according to claim **2,** wherein one of said threaded extensions has a left hand thread and the other a right hand thread.

4. In a metal working machine according to claim **1,** wherein said shaft means includes a radial enlargement; and stationary abutment in axial engagement with both axial faces of said radial enlargement.

5. In a metal working machine according to claim **1,** and journal means on said housing and mounted in one said frames maintaining said housing in a vertical plane.

6. In a metal working machine according to claim **1,** wherein the linkage shaft means of said linkage system comprises two axially relatively movable but rotatably rigidly connected shaft extensions; cylinder means receiving one said shaft extension for axial movement therein; the other said shaft extension being rigidly connected to said cylinder means.

7. In a metal working machine according to claim **6,** wherein said other shaft extension is provided with a radial enlargement; and abutment means in engagement with said radial enlargement.

* * * * *