United States Patent [19]

Williamson et al.

[11] **3,909,767**

[45] **Sept. 30, 1975**

[54] **MINIATURE PLUG-IN FUSE**

[75] Inventors: **Harold L. Williamson; Avinash P. Aryamane,** both of Mount Prospect, Ill.

[73] Assignee: **Littelfuse, Inc.,** Des Plaines, Ill.

[22] Filed: **Jan. 14, 1974**

[21] Appl. No.: **432,980**

[52] **U.S. Cl.** **337/264;** 337/198; 337/260; 337/295

[51] **Int. Cl.** **H01h 85/08**

[58] **Field of Search** ..... 337/264, 255, 198, 297, 337/201, 293, 187, 206, 295, 262, 263; 339/62, 147 P, 208

[56] **References Cited**

UNITED STATES PATENTS

1,926,445	9/1933	Klopfenstein	337/264
2,512,932	6/1950	Gretschel	337/264
3,436,711	4/1969	Borzoni	337/198
3,775,723	11/1973	Mamrick et al.	337/245

Primary Examiner—Harold Broome
Attorney, Agent, or Firm—Wallenstein, Spangenberg, Hattis & Strampel

[57] **ABSTRACT**

A plug-in fuse assembly is provided comprising a preferably narrow elongated housing made of insulating material in which is mounted a plug-in fuse element consisting solely of a stamping from a strip of fuse metal which preferably forms both a pair of parallel terminal-forming blades projecting from the inner side of the housing and a fuse-forming link enveloped by the housing. The fuse link interconnects current carrying extensions of the parallel terminal-forming blades and is of much smaller cross-sectional area than the terminal-forming blades and the current-carrying extensions thereof. The ends of the housing are adapted to be grasped by the user's fingers for insertion into or removal from a mounting panel where a number of assemblies can be placed in closely laterally spaced relation. The outer wall of the housing is most advantageously transparent so the fuse link is readily visible when the fuse assembly is mounted in such closely laterally spaced relation on a panel with other similar fuse assemblies.

19 Claims, 12 Drawing Figures

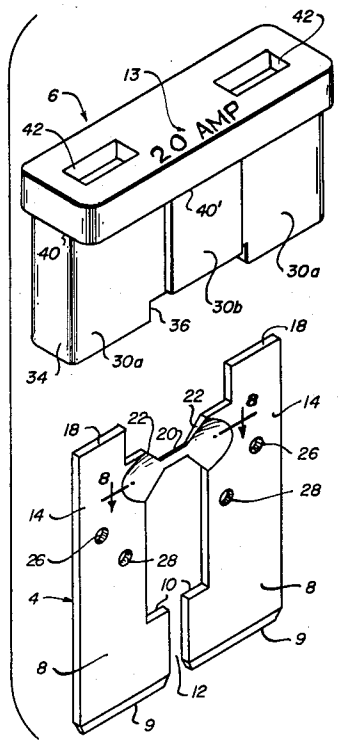

FIG. 1

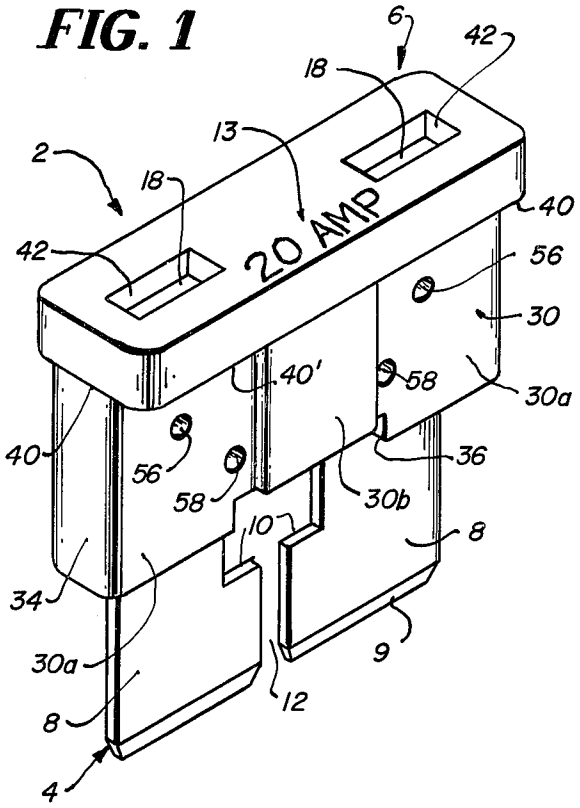

FIG. 2

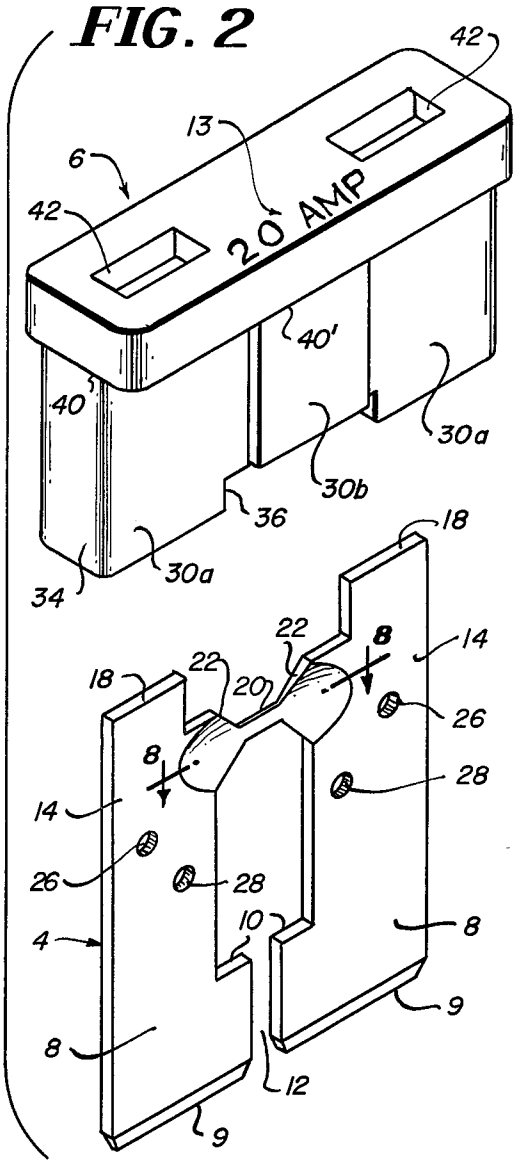

FIG. 3

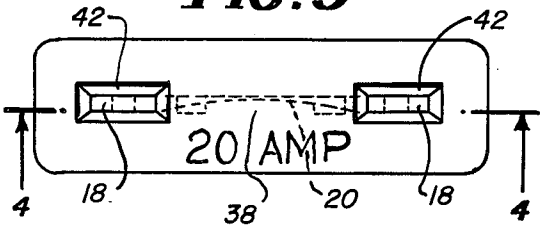

FIG. 4

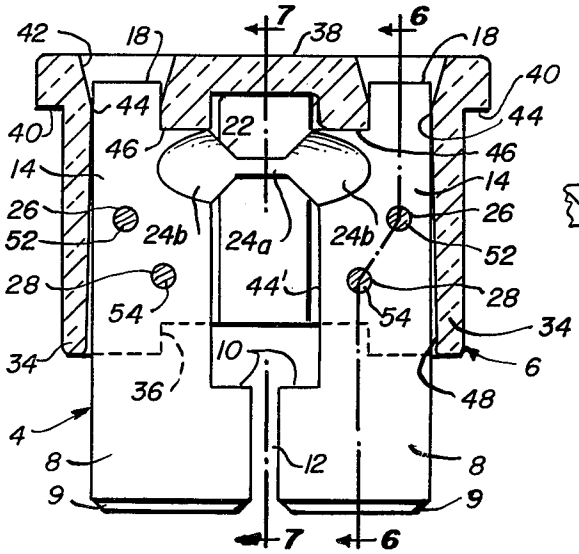

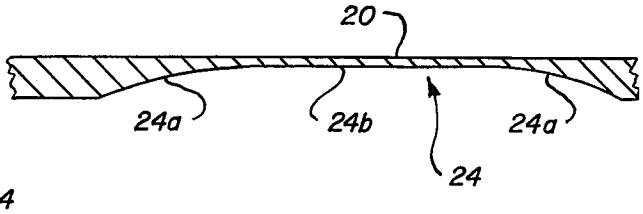

FIG. 8

FIG. 5

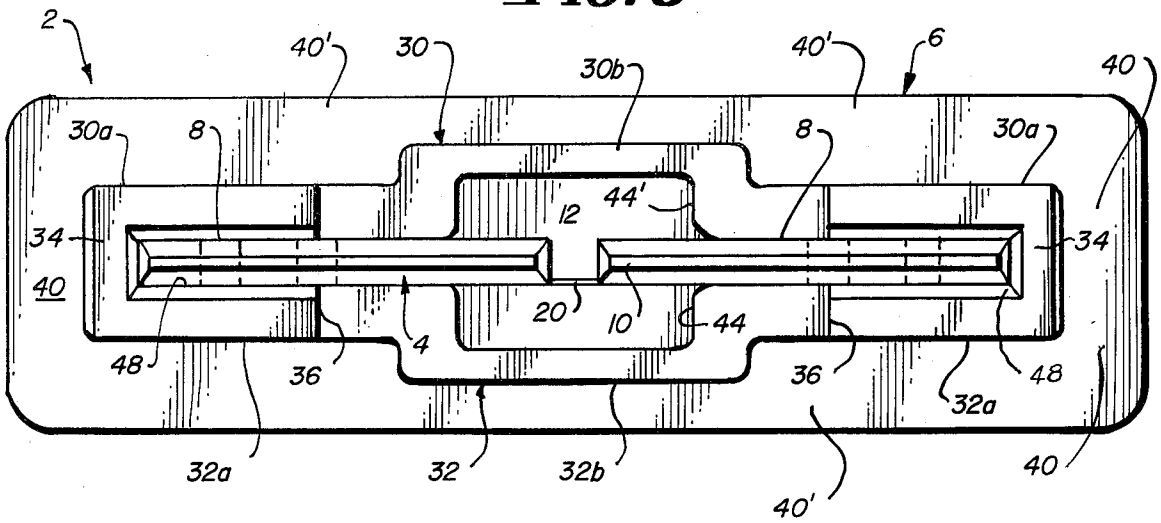

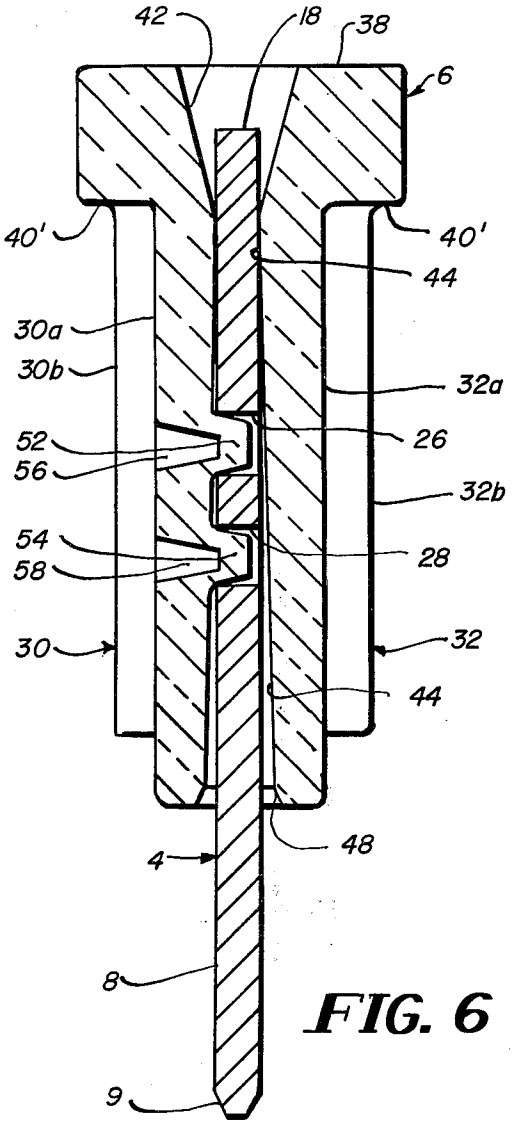

FIG. 6

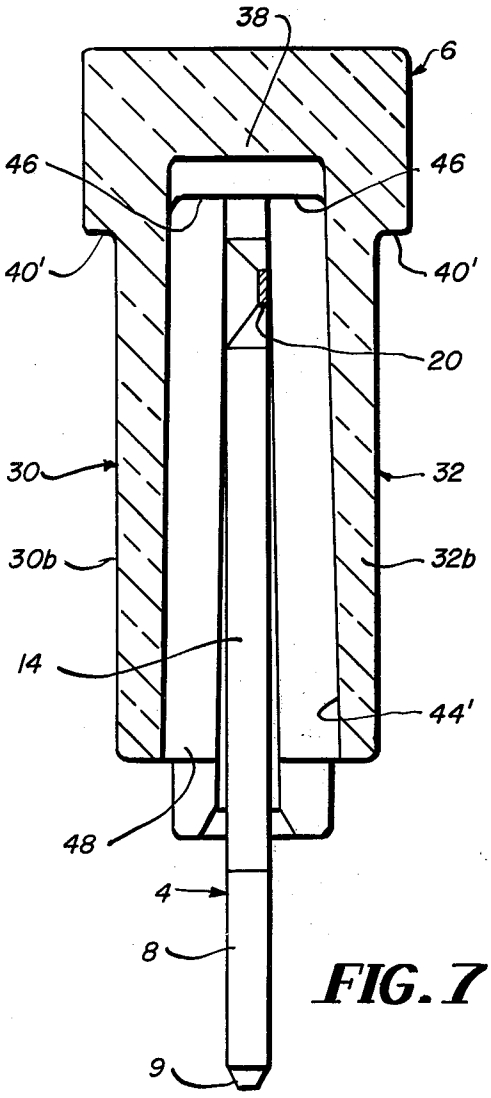

FIG. 7

FIG. 9

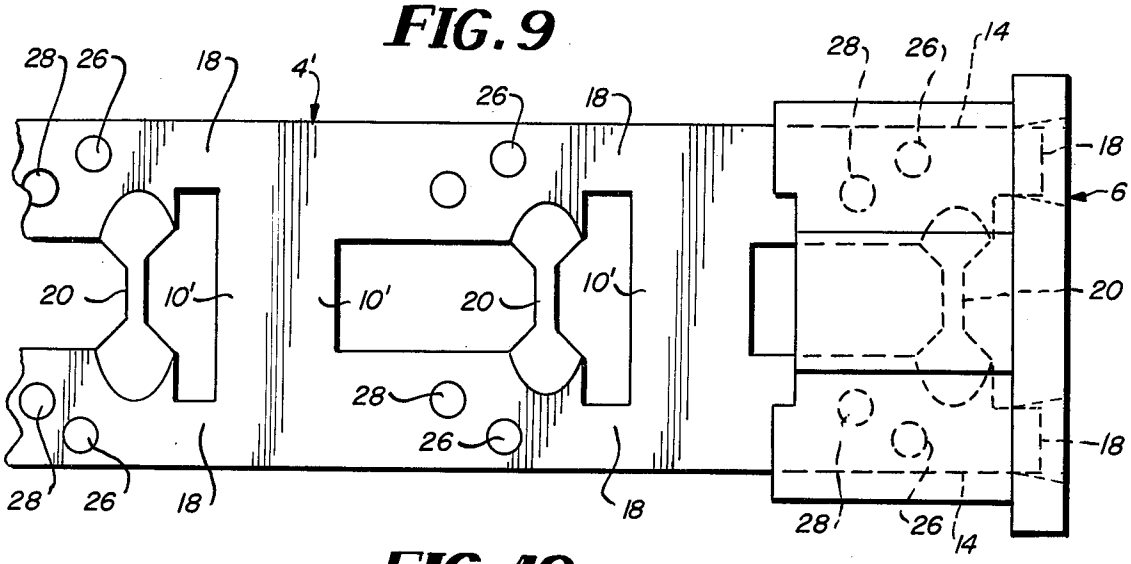

FIG. 10

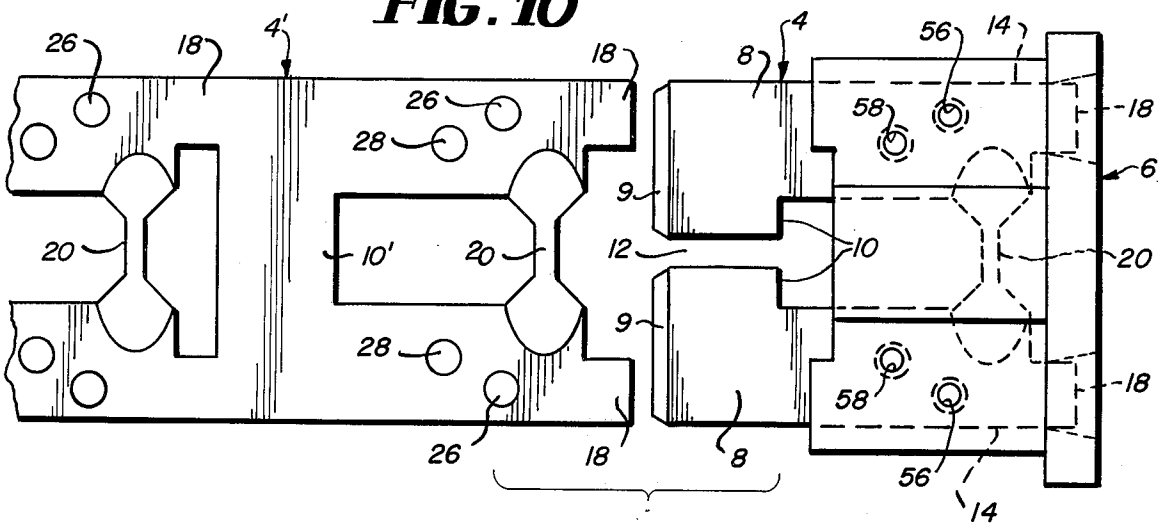

FIG. 11

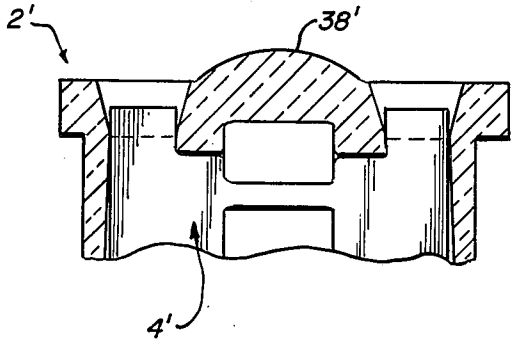

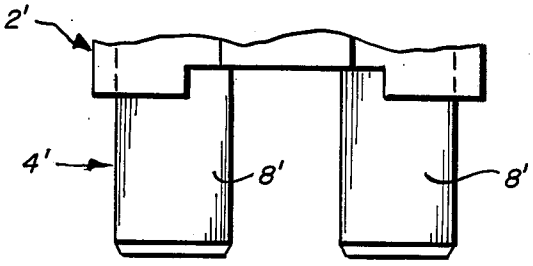

FIG. 12

MINIATURE PLUG-IN FUSE

BACKGROUND OF THE INVENTION

The present invention relates to miniature current overload fuses which, whether they are rated to carry only a few amperes or as much as 30 amperes, occupy a space which is only a fraction of the space occupied by the conventional glass envelope cylindrical fuses.

An overload fuse capable of carrying currents of the above range of magnitudes commonly comprise a sealed cylindrical glass envelope with cylindrical terminals projecting from the ends thereof and a fuse link extending between the fuse terminals within the sealed cylindrical envelope. Fuses of this type having current ratings of 10–30 amperes commonly have lengths of the order of magnitude of over one inch and, together with the mounting terminals with which they are associated, an overall width of approximately one quarter inch and higher. Some of the disadvantages of this type of fuse are the large space requirements for mounting the same and difficulty in removing them from mounting clips.

A marked improvement in overload current fuses of the rating referred to have been made in that the fuse has a length well under ¾ inch and a width of under ¼ inch. Such a fuse is disclosed in U.S. Pat. No. 3,436,711. Also, the terminals of the improved fuses plug into socket openings transversely to the length of the fuse body, so the socket connector can be a much less bulky support means that than needed for conventional high current rated fuses.

While the miniature fuses heretofore developed have been a substantial improvement over the conventional cylindrical glass envelope fuses, they still left much to be desired from the standpoint of their cost of manufacture and protection to the user. For example, in some of the miniature fuses heretofore developed, the fuse link was exposed so that the insertion thereof into a shorted circuit would blow the same and spew fuse material onto the person inserting the fuse. Also, it was possible for a person inserting or removing such a fuse to make contact with the exposed fuse link which created a shock hazard if he engaged the fuse negligently. While in one form of miniature fuse heretofore developed, the fuse link was enclosed in a transparent housing having a handle extending from the outer walls thereof, the fuse was relatively expensive to manufacture, it has less reliability than the fuse of the present invention, and the fuse link was only visible on the side of the housing because the handle obstructed a frontal view thereof, so the fuse link could not be seen when the fuse was mounted between another pair of similar closely spaced fuses on a mounting panel. Also, the handle could not be easily grasped due to the small clearance between adjacent fuses.

It is, accordingly, one of the objects of the invention to provide a miniature fuse with or without an enclosed fuse link and which is capable of carrying currents where desired well in excess of 10 amperes, such as up to 30 amperes, and can be manufactured at a much smaller cost than the miniature fuses heretofore designed.

A related object of the invention is to provide a miniature fuse having a housing providing an insulated gripping surface and a shield protecting the user from being contacted by the fuse material as an inserted fuse is blown, and which further can be easily inserted into

or removed from an appropriate female connector on a mounting panel where the connectors are very closely spaced, and also preferably wherein the fuse link thereof is readily visible when the fuse is mounted on such a mounting panel.

In the miniature fuses heretofore developed, the design of the fuses were such that the external configuration and dimensions of the fuses were identical for widely varying current ratings thereof. It was, therefore, readily possible for a fuse having a very high current rating, such as 20–30 amperes, to be inadvertently placed into a connector associated with a circuit where the current rating may be from 5–15 amperes, creating a very hazardous operating condition. While these fuses were generally marked or color coded to indicate their fuse ratings, the user could readily make a mistake by misreading the usually small current rating markings or complicated color codes.

Accordingly, another object of the invention is to provide a fuse design where, although the different fuse assemblies have substantially identical configurations and size, the difference between relatively high and relatively low current rated fuses can be readily detected.

In most of the miniature fuse designs heretofore proposed, the terminals have cylindrical pin-like configurations molded into bases of insulating material, and the fuse links were soldered between the inner ends of these terminals. The presence of solder connections sometimes created problems of reliability resulting from corrosion or hot spots due to poor solder connections or deterioration with age. Thus, another object of the present invention is to provide a miniature fuse having features satisfying one or more of the objectives previously discussed and, in addition, are devoid of the corrosion or hot spot problems referred to.

SUMMARY OF THE INVENTION

In accordance with one of the features of the invention, a plug-in fuse element is provided consisting solely of a single piece stamping from a sheet or strip of fuse metal which forms a pair of spaced, generally parallel, substantially coplanar terminal-forming blade portions to be received in a pair of pressure clip terminals or the like supported in a mounting panel, the terminal-forming blade portions having substantially coplanar longitudinal current-carrying extensions at the inner end portions thereof which are interconnected by a transversely extending generally coplanar fuse-forming link portion of much smaller cross sectional area than the terminal-forming blade portions and the current-carrying extensions thereof. The smaller cross sectional area of the fuse link-forming portion of the plug-in fuse element is most advantageously achieved by reducing both the width and thickness thereof relative to that of the other current-carrying portions of the plug-in fuse element. Reduction in thickness of the fuse link-forming portion can be achieved in a number of ways, such as by milling and/or compressing the metal, the combination of the two methods being preferred.

The just described plug-in fuse element can be used as a fuse by merely plugging it into pressure clip terminals or the like without any additional elements added thereto, or can be mounted within a housing in a manner to be described, which is the preferred form of the invention. The plug-in fuse element just described with or without a housing can be readily mass produced by simply stamping the same from the end of a strip of

such fuse metal, after selected areas thereof have been milled and/or compressed to reduce the cross sectional area of the portions of the strip which are to constitute the fuse link portion of the plug-in fuse elements to be severed therefrom. (Such a one piece plug-in fuse element as described is to be contrasted with a combination fuse and terminal member attached to an insulating base which has been manufactured and sold in Europe for many years, which member has an elongated and compressed C-shaped configuration. The end portions of the member are on the exterior of the base and are received between a pair of spaced support clips. Also, U.S. Pat. No. 3,500,463 to Gregory and U.S. Pat. No. 2,468,351 to Vail show one piece fuse and terminal elements of a different and more costly construction than that of the present invention just described. Also, in the fuse of the Vail patent the one piece fuse and terminal element forms a subcomponent of a conventional screw socket type fuse and thus is not a plug-in unit insertable directly into a mounting panel.)

In accordance with the most preferred form of the plug-in fuse element of the invention, the terminal-forming blade portions of the plug-in fuse element are provided with transversely projecting wings when the fuse has a relatively high current rating, giving the terminals the appearance of a relatively massive and, therefore, high current-carrying capacity terminals, and preventing their insertion into low current fuse-receiving sockets.

In accordance with another feature of the invention, the above one piece plug-in fuse element or one similar to the same, forms an assembly with a housing made of insulating material which provides insulated gripping surfaces for the assembly and forms a shield which prevents the spewing of fuse metal into the surrounding atmosphere when the fuse is blown. In the most preferred form of the invention, although the housing can be comprised of two confronting housing halves snapped around the plug-in fuse element, the housing is most advantageously a one piece molded element having an opening in the inwardly facing side thereof into which the plug-in fuse element is inserted into the housing. Also, the housing is most advantageously a narrow elongated shape defined by relatively closely spaced side walls bridged by narrow end walls and a narrow outer wall. The plug-in fuse element may be anchored in place in the housing by forming projecting proportions in the housing which extend into apertures in the plug-in fuse element, the projections being most advantageously formed by a cold staking or ultrasonic material softening operation. At least the aforementioned outer wall of the housing (i.e. the wall which faces outwardly when the fuse assembly is mounted on a mounting panel), and preferably the entire housing, is most advantageously made of a transparent material. The fuse link portion of the plug-in fuse element is positioned at a point contiguous to this transparent outer wall where it can be readily seen at all times. At least the longitudinal end portions of the outer wall preferably overhang the rest of the housing to provide convenient gripping surfaces at the ends of the housing, so that the plug-in fuse assembly can be readily grasped for insertion into and removal from any point in a mounting panel, despite small clearances between adjacently mounted plug-in fuse assemblies.

In accordance with still another aspect of the invention, the housing is preferably provided with a pair of terminal access openings in the outer wall thereof, which openings preferably taper inwardly to a point in alignment with the innermost ends of the terminal extensions, so resistance measuring test probes are guided into contact with the terminal-forming blade portions of the plug-in fuse element to test for continuity on the assumption that the fuse link might have a crack in it which is not readily visible through the above described transparent housing outer wall. The defining walls of the access openings preferably have skirt portions extending therefrom which act as shield walls to prevent blown fuse material from reaching the terminal access openings.

With a plug-in fuse assembly consisting of a single stamping forming both the terminal-forming blade portions and the fuse-forming link portions of a plug-in fuse element, and a housing into which such single piece stamping may be readily inserted and locked into place, the design of the fuse assembly lends itself to a low cost mass production assembly thereof wherein various stamping and milling operations forming attached blanks for making many plug-in fuse elements are first performed on longitudinally spaced areas of a fuse metal strip. Then, a plug-in fuse assembly is completed by applying a housing over the end of the strip, securing each housing in place and severing a completed plug-in fuse assembly from the strip, the housing applying and severance operations on the strip being repeated in sequence to mass produce the plug-in fuse assemblies.

DESCRIPTION OF THE DRAWINGS

FIG. **1** is a perspective view of a preferred form of the plug-in fuse assembly of the invention;

FIG. **2** is an exploded view of the housing and plug-in fuse element making up the plug-in fuse assembly of FIG. **1**;

FIG. **3** is a top plan view of the plug-in fuse assembly of FIG. **1**;

FIG. **4** is a vertical longitudinal sectional view through the fuse assembly shown in FIG. **3**, taken along section line **4—4** therein;

FIG. **5** is an enlarged bottom view of the plug-in fuse assembly of FIG. **1**;

FIG. **6** is an enlarged transverse vertical sectional view through the fuse assembly shown in FIG. **4**, taken along section line **6—6** thereof;

FIG. **7** is an enlarged vertical transverse sectional view through the center portion of the fuse assembly shown in FIG. **4**, taken along section line **7—7** thereof;

FIG. **8** is a greatly enlarged framentary sectional view through the fuse link portion of the plug-in fuse assembly shown in FIG. **2**, taken along section line **8—8** thereof, and showing the manner in which the fuse-forming link portion thereof is reduced in thickness by a combination milling and pressing operation;

FIG. **9** illustrates the insertion of the housing of the fuse assembly of FIGS. **1–8** onto the end of a pre-milled and pre-stamped strip of fuse metal from which numbers of plug-in fuse elements like that shown in these figures are formed;

FIG. **10** shows the separation of a completed plug-in fuse assembly from the strip shown in FIG. **9**, after a strip staking and severing operation has been carried out;

FIG. **11** illustrates a fragmentary longitudinal sectional view through a portion of a plug-in fuse assembly

like that shown in FIGS. 1–10 but which has been modified by adding a magnifying lens to the outer wall of the housing thereof; and

FIG. 12 illustrates a fragmentary side elevational view of a plug-in fuse assembly modified from that shown in FIG. 1–11 in that the wings on the terminal-forming blade portions of the plug-in fuse element have been removed to indicate a lower current rated fuse.

DESCRIPTION OF THE PREFERRED EMBODIMENT OF THE INVENTION

Referring now more particularly to FIGS. 1–4, there is shown a plug-in fuse assembly 2 made of only two component parts, namely a plug-in fuse element 4 which most advantageously is a single stamping from a strip of fuse metal, and a housing 6 which most advantageously is a single piece synthetic plastic molded part defining a space therein into which portions of the plug-in fuse element 4 extend and are secured in any suitable way, but more preferably by a cold staking operation to be described.

The plug-in fuse element 4 has terminal-forming blade portions 8—8 extending in spaced parallel relationship from the inner or bottom margin of the housing 6 in what will be referred to as a downward or inwardly extending direction. The ends of the terminal-forming blade portions 8—8 of the plug-in fuse element are most advantageously tapered at 9—9 to form pointed end portions which readily slip into place between the confronting walls of conventional spring clip terminals (not shown) supported in mounting panel apertures. The terminal-forming blade portions 8—8 of the plug-in fuse element 4 have inwardly extending rough current rating indicating wings or projections 10—10, to provide a more massive appearance to the exposed terminal-forming portions 8—8 of the plug-in fuse element 4, identifying the fact that the fuse assembly is one having a relatively high current rating, such as in the range of from 20 to 30 amps. (The exact current rating is indicated by indicia 13 on the outer walls of the housing as shown in FIGS. 1–3. Where a plug-in fuse element has a relatively low current rating such as 5 to 15 amperes, the wings 10—10 are eliminated so the user knows immediately that the plug-in fuse element which does not have any wings is for a lower current rated application. Such a plug-in fuse element is shown in FIG. 12.)

The plug-in fuse element 4 is stamped from a strip 4′ of fuse metal (FIGS. 9 and 10). Prior to the plug-in fuse element being severed from the strip 4′, the wings 10—10 are interconnected to form a rigidifying web 10′ for the strip 4′, and so a narrow piece of material is stamped from the strip to form the terminal-forming blade portions 8—8 and a gap 12 between the same. The tapered portions 9—9 of the terminal-forming blade portions 8—8 may be formed by dies (not shown) during the operation which severs the plug-in fuse element from the strip.

The terminal-forming blade portions 8—8 have current-carrying extensions 14—14 projecting into the aforementioned space formed by the housing 6, which current-carrying extensions project well up into the upper or outer extremities of the housing 6, to be contiguous to the front or outer wall of the housing to be described. The outer end portions of the current-carrying extensions 14—14 are interconnected by a fuse-forming link portion 20 which is preferably both narrower in width and much smaller in thickness than the other current-carrying portions of the plug-in fuse element 4. The current-carrying capacity of the fuse-forming link portion 20 may be varied by varying the fuse metal composition or by varying the width and/or the thickness of the fuse-forming link portion. In the particular configuration of the plug-in fuse element 4 shown in the drawings, the current-carrying extensions 14—14 join the fuse-forming link portion 20 of the plug-in fuse element 4 by tapered portions 22—22. All of the various parts of the plug-in fuse element are substantially in coplanar relation so no metal beinding operations need be performed in the process of making the same.

It was found that a reduction of the thickness of the metal of the fuse-forming link portion 20 is preferably achieved by a milling operation which mills away the metal on one side thereof to form a generally curved depression 24 best shown in FIG. 8. The outer portions of this depression 24 are identified by reference numerals 24*a*–24*a* and represent the milled surfaces. The flattened intermediate portion 24*b* of the depression 24 is obtained by squeezing or pressing the metal to further reduce this thickness thereof. For example, it was found that in one plug-in fuse element, the thickness of the fuse metal was reduced from an initial thickness of 0.027 inches to about 0.005 inches by a milling operation, and a further reduction of 0.002 inches was achieved by a pressing operation, ending up with a minimum thickness of the fuse-forming link portion 20 of 0.003 inches. Of course, the precise thickness of the fuse metal depends upon the fuse metal composition, the width of the fuse-forming link portion 20 and the desired current rating of the fuse.

While the plug-in fuse element 4 may be used as a fuse element without its incorporation in the housing 6, for safety reasons it is preferred to incorporate the plug-in fuse element 4 in the housing 6. To this end, and for reasons to be explained, the outer end portions of the terminal extensions 14—14 are provided with outwardly or upwardly projecting tabs 18—18 adapted to make contact with test probes to test for the continuity of the fuse-forming link portion 20 of the plug-in fuse element 4. Also, to anchor the plug-in fuse element 4 within the housing 6, anchoring apertures 26—26 and 28—28 are respectively formed in the terminal extensions 14—14 to receive anchoring projections to be described formed in the housing walls.

While the housing 6 could be made in two separate parts snappable together in accordance with the broadest aspects of the invention, the housing is most advantageously a single piece molded part as previously indicated. Also, it preferably has a narrow elongated configuration formed by relatively closely spaced side walls generally indicated by reference numeral 30–32, the side walls having end portions 30*a*–32*a* and 30*a*–32*a* which are spaced together much more closely than the central or intermediate portions 30*b*–32*b* thereof. The side walls 30–32 are interconnected at their end margins by narrow end walls 34—34, and at their outer or top margins by an outer wall 38 which overhangs the rest of the housing to form downwardly facing shoulder 40—40 at the longitudinal ends of the outer wall 38 and downwardly facing shoulders 40′—40′ along the longitudinal side margins of the housing 6. The shoulders 40′—40′ are coplanar continuations of the shoulders 40—40 at the ends of the housing 6.

Terminal access openings **42—42** are provided in the outer wall **38** adjacent the opposite end portions thereof in alignment with the location of the test probe-receiving tabs **18—18** of the plug-in fuse element **4.** The walls of the terminal access openings **42—42** taper down to an inner dimension which approximates the width of the test probe-receiving tabs **18—18,** so that test probes can be guided into contact with the tabs **18—18.** The terminal access openings **42—42** communicate with the aforementioned plug-in fuse element receiving space in the housing **4.** The portions **44—44** of this space immediately beneath the access openings **42—42** are relatively small because of the close spacing of the side wall portions **30***a*–**32***a* of the housing at these points, the width of the space portions **44—44** as viewed in FIG. **6** tapering from the bottom open end of the housing upwardly toward the terminal access openings **42—42,** reaching a narrow dimension about equal to the thickness of the plug-in fuse element **4.** At the inner margins of the terminal access openings **42—42** the upper wall **38** is provided with downwardly extending skirts **46—46** which act as shield walls preventing spewing fuse metal from gaining entrance to the terminal access openings **42—42.** These shield forming skirts **46—46** also act as stop or abutment shoulders for the current-carrying extensions **14—14** of the terminal-forming blade portions **8—8** of the plug-in fuse element.

The fuse-forming link portion **20** of the fuse element **4** is positioned in a relatively wide portion **44'** (FIG. **7**) of the housing interior, to provide for free circulation of air around the center portion of the fuse-forming link portion, which is the part thereof which first melts under excessive current flow, so heat does not accumulate which would adversely affect the current at which the fuse will blow.

The narrow and wide portions **44—44** and **44'** of the space within the housing **6** open onto the bottom of the housing for the full extent thereof through an entry opening **48.** The opening **48** permits the housing to be pushed over the end portion of the pre-stamped and milled strip **4'** from which a completed fuse element is punched immediately following the securing of the housing **6** to the end portion of the strip as previously indicated.

The housing **6** is preferably a molded part made of a transparent synthetic plastic material so that the fuse-forming filament portion **20** of the plug-in fuse element **4** is readily visible through the intermediate portion of the outer wall **38,** to which the fuse-forming link portion **20** is in space but relatively contiguous relation. The housing is preferably molded of a high temperature transparent nylon made by Belding Chemical Industries of New York City, New York (Product Code No. LX-3330).

While the housing interior **6** could be made with resilient projections which snap into the anchoring apertures **26—26** and **28—28** in the plug-in fuse element **4,** it is preferred to secure the housing in place by forming projections **52** and **54,** by a cold staking operation, ultrasonic melting or other operation, which enter the anchoring apertures **26—26** and **28—28** of the plug-in fuse element **4.** The depressions **56** and **58** left by a staking operation are shown in the side wall **30** in FIGS. **2** and **6.**

To improve the visibility of the fuse-forming link portion **20** of the plug-in fuse element, the outer wall of the housing of the fuse assembly can be modified as shown in FIG. **11** wherein the housing outer wall **38'** of a modified fuse assembly **2'** is thickened and curved to form a magnifying lens. Also, as shown in FIG. **12,** the fuse assembly **2'** is a low current rated fuse assembly as evidenced by the absence of wings on the terminal-forming blade portion **8'–8'** on the plug-in fuse element **4'.**

The exemplary embodiments of the invention just described have thus provided an exceedingly reliable, compact and inexpensive to manufacture plug-in fuse assembly which can be readily inserted into and removed from suitable closely spaced spring clip terminal connectors in a mounting panel by grasping the shoulders **40—40** at the longitudinal ends of the housing **6.** The transparent material out of which the housing **6** is made forms a convenient window in the outer wall through which the fuse-forming link portion of the plug-in fuse element can be viewed when the plug-in fuse assembly is mounted on the mounting panel. The terminal access openings enable test equipment to test the continuity of the fuse if the user does not desire to rely solely on a visual observation of the fuse-forming link portion of the fuse. The presence or absence of wings on the terminal-forming blade forming of the plug-in fuse element immediately informs the user whether he has selected a relatively high or low current rated fuse, although the indicia **13** should be examined to determine the actual current rating.

It should be understood that numerous modifications may be made in the most preferred form of the invention described without deviating from the broader aspects thereof.

We claim:

1. A plug-in fuse element comprising a one-piece coplanar plate-like body of fuse metal which body comprises a pair of juxtaposed laterally spaced generally parallel terminal-forming blade portions to be received by pressure clip terminals in a mounting panel, the terminal-forming blade portions having current-carrying extensions at the inner end portions thereof which are interconnected by a transversely extending fuse-forming link portion of much smaller cross-sectional area than said terminal-forming blade portions and the current-carrying extensions thereof, said terminal-forming blade portions, current-carrying extensions at the inner end portions thereof and transversely extending fuse-forming link portion being substantially all in the same plane parallel to the outer faces of the plate-like body forming the same.

2. The plug-in fuse element of claim **1** wherein said fuse-forming link portion of said coplanar plate-like body is both narrower in width and thinner in thickness than the terminal-forming blade portions and current-carrying extension thereof.

3. The plug-in fuse element of claim **1** wherein said current-carrying extensions of said terminal-forming blade portions have apertures for receiving interlocking projections of a housing into which the plug-in fuse element can be inserted.

4. The plug-in fuse element of claim **3** combined with a housing into which the plug-in fuse element is inserted and is immovably held by portions thereof extending into said aperture of said plug-in fuse element, said housing forming an insulated gripping body for the plug-in fuse assembly and a shield for spewing blown fuse metal of said fuse-forming link portion of the plug-

in fuse element when the current rating thereof is exceeded.

5. The plug-in fuse element of claim **1** wherein said terminal-forming blade portions have wings projecting transversely away from the rest of the terminal-forming blade portions to identify a relatively large current-carrying capacity of the fuse element.

6. The plug-in fuse assembly of claim **2** wherein said fuse link portion has a width many times greater than the thickness thereof.

7. A plug-in fuse assembly consisting solely of a housing made of insulating material and a plug-in fuse element secured within said housing, said housing being a synthetic plastic member which is open at the inwardly facing side thereof for the full width of the plug-in fuse element so as initially to receive said plug-in fuse element when it is assembled therewith, said housing and plug-in fuse element having interlocking means for securing the plug-in fuse element within the housing, said plug-in fuse element being made entirely of a fuse metal and comprising a one-piece element having a pair of terminal-forming blade portions to be received by pressure clip terminals in a mounting panel, the terminal-forming blade portions having current-carrying extensions at the inner end portions thereof which are interconnected by a fuse-forming link portion of much smaller cross-sectional area than said terminal-forming blade portions and said current-carrying extensions, said terminal-forming blade portion of said plug-in fuse element being exposed on the outside of said housing, and said housing forming an insulated gripping body for the plug-in fuse assembly and a shield for spewing blown fuse metal of said fuse-forming link portion of the plug-in fuse element when the current rating thereof is exceeded.

8. The plug-in fuse assembly of claim **7** wherein the plug-in fuse element is a one-piece sheet metal stamping from a sheet of fuse metal.

9. The plug-in fuse assembly of claim **7** wherein said terminal-forming blade portions of the plug-in fuse element extend generally in spaced parallel coplanar relation with one another, said current-carrying extension there of and said fuse-forming link portion; and the housing has an outer wall positioned opposite the fuse-forming link portion of the plug-in fuse element and facing in the opposite direction from the direction in which said terminal-forming blade portions of the plug-in fuse element extend, said outer wall forming at least part of a shield preventing the outward spewing of fuse metal under fuse blowing current conditions.

10. The plug-in fuse assembly of claim **9** wherein said outer shield-forming wall is transparent at least at the portion where it is contiguous to the portion of the fuse-forming link portion which will blow under fuse blowing current conditions.

11. A plug-in fuse assembly comprising a housing made of insulating material forming an insulated gripping body for the plug-in fuse assembly; a pair of conductive plug-in terminals on the outside of the housing having extensions thereof in the housing, a fuse link made of a fuse metal extending between the terminal extensions in the housing, said housing having terminal access openings which expose said terminal extensions, and said housing providing shield wall means for preventing the spewing of blown fuse metal outside of the housing when fuse blowing current flows through said fuse link, the defining walls of said access openings having skirt portions extending inwardly therefrom which, in conjunction with other wall portions of the housing, act as said shield wall means to prevent blown fuse material from spewing outside of the housing.

12. The plug-in fuse assembly of claim **11** wherein said access openings have inwardly tapering walls to guide resistance measuring test probes into continuity measuring positions within the housing.

13. The plug-in assembly of claim **11** wherein said plug-in terminals of the fuse assembly project in the same direction from one side of the housing thereof, said housing having an outer wall facing in the opposite direction from the direction in which said terminals project, and said terminal access openings are in said outer wall of the housing.

14. A plug-in fuse assembly consisting solely of a housing made of insulating material and a plug-in fuse element secured within said housing, said housing forming an insulated gripping body for the plug-in fuse assembly and being defined by closely spaced side walls, end walls bridging the end portions of the side walls and an outer wall bridging the outer margins of the side walls, at least a part of said housing being made of substantially transparent material permitting visibility of a part of the interior of the housing at this point; and a plug-in fuse unit mounted in said housing and consisting of a one piece plate-like body made of fuse metal and including a pair of spaced juxtaposed generally parallel terminal portions to be received by female pressure clip terminals or the like in a mounting panel and projecting inwardly from opposite end portions of the housing and a fuse link extending transversely between coplanar extensions of said terminal portions within said housing and visible in said transparent portion of said housing, said terminal-forming blade portions, current-carrying extensions at the inner end portions thereof and transversely extending fuse-forming link portion being substantially all in the same plane parallel to the outer faces of the plate-like body forming the same, said outer housing wall terminating at the ends of the housing in outwardly projecting finger gripping portions permitting the housing to be gripped between fingers extending over the opposite longitudinal end portions of the housing.

15. A plug-in fuse assembly comprising a housing made of insulating material forming an insulated gripping body for the plug-in fuse assembly and defined by closely spaced side walls, end walls bridging the end portions of the side walls and an outer wall bridging the outer margins of the side walls, at least an intermediate portion of said outer wall being made of substantially transparent material permitting visibility of the interior of the housing at this point; and a plug-in fuse unit mounted in said housing and consisting of a pair of spaced parallel terminal portions to be received by female pressure clip terminals or the like in a mounting panel and projecting inwardly from opposite end portions of the housing, and a fuse link extending transversely between coplanar extensions of said terminal portions within said housing and visible in said transparent portion of said outer wall of the housing, said outer wall of the housing being provided with terminal access openings opposite the extensions of said terminal portions of said plug-in fuse unit which extend adjacent to said outer wall from the inner side of the housing, said terminal access openings being adapted to receive continuity test probes to make engagement with

the extensions of said terminal portions of the plug-in fuse unit, and said outer housing wall terminating at the ends of the housing in outwardly projecting finger gripping portions permitting the housing to be gripped between fingers extending over the opposite longitudinal end portions of the housing, whereby a number of fuse assemblies can be closely spaced on a support panel with the fuse links therein visible through the outer wall thereof and be readily inserted into or removed from sockets despite the very close spacing between the lateral sides of similar fuse assemblies to be received by female pressure clip terminals or the like in a mounting panel.

16. The plug-in fuse assembly of claim **15** wherein there is a single large opening on the bottom side of said housing into which opening said plug-in fuse unit was initially inserted, and said housing and plug-in fuse unit having means for interlocking the same for securely holding the plug-in fuse unit in the housing.

17. The plug-in fuse assembly of claim **14** wherein said terminal and fuse link-forming portions of said plug-in fuse unit forms a one-piece stamping from a sheet of fuse metal.

18. A plug-in fuse assembly consisting solely of a housing made of insulating material and an all metal plug-in fuse element secured within said housing, said housing being a synthetic plastic member defined by closely spaced side walls, end walls bridging the end portions of the side walls and an outer wall bridging the outer margins of the side walls, said housing and plug-in fuse element having interlocking means for securing the plug-in fuse element within the housing, said plug-in fuse element having a pair of terminal forming blade portions to be received by pressure clip terminals in a mounting panel and projecting in laterally spaced parallel relation from said housing on the side thereof opposite to that containing said outer wall, the terminal-forming blade portions having current-carrying extensions at the inner end portions thereof which are interconnected by a fuse-forming link portion, said terminal-forming blade portions of the plug-in fuse element being in substantially coplanar relation with one another, said current-carrying extensions thereof and said fuse-forming link portion, and said housing providing a narrow space which closely receives the current carrying extensions of said plug-in fuse element and a relatively wide space adjacent the fuse-forming link portion, and said housing forming an insulated gripping body for the plug-in fuse assembly and a shield for spewing blown fuse metal of said fuse-forming link portion of the plug-in fuse element when the current rating thereof is exceeded.

19. The combination of claim **18** wherein said housing is a one-piece molded synthetic plastic member which is open at the inwardly facing side thereof for the full width of the plug-in fuse element so as initially to receive said plug-in fuse element when it is assembled therewith.

* * * * *