United States Patent [19]

Wray

[11] **3,904,458**

[45] **Sept. 9, 1975**

[54] **METHOD OF JOINING CONTINUOUS STRANDS**

[75] Inventor: **Raymond Patrick Wray,** Harrogate, England

[73] Assignee: **Imperial Chemical Industries Limited,** London, England

[22] Filed: **Oct. 25, 1972**

[21] Appl. No.: **300,874**

Related U.S. Application Data

[63] Continuation-in-part of Ser. No. 54,646, July 13, 1970, abandoned.

[30] **Foreign Application Priority Data**

July 16, 1969	United Kingdom	35772/69
Feb. 20, 1970	United Kingdom	8225/70
Mar. 12, 1970	United Kingdom	11930/70

[52] **U.S. Cl.** **156/85;** 57/142; 57/159; 156/158; 156/172; 156/296

[51] **Int. Cl.**[2] **D02G 3/22;** B65H 69/06

[58] **Field of Search** ..... 156/84, 85, 86, 294, 296, 156/180, 303.1, 304, 172, 49, 148, 149, 161, 169, 157–159; 57/142, 144, 149, 159, 162, 22, 23, 140 G; 264/230, 342; 289/1.5; 28/47; 174/DIG. 8

[56] **References Cited**

UNITED STATES PATENTS

2,577,466	12/1951	Jones	156/86
2,808,356	10/1957	Kimball	57/142
2,953,418	9/1960	Runton et al.	156/85
2,974,559	3/1961	Coggi	156/84
3,012,398	12/1961	Merkle	57/159
3,070,947	1/1963	De Toledo et al.	57/159
3,198,059	8/1965	Phaneuf et al.	264/1
3,400,481	9/1968	Christenson	156/86
3,466,210	9/1969	Wareham	156/86
3,526,085	9/1970	Illman	57/159
3,634,972	1/1972	Illman	57/142
3,674,581	7/1972	Kalnin et al.	156/85

Primary Examiner—Charles E. Van Horn
Assistant Examiner—Frank Frisenda
Attorney, Agent, or Firm—Cushman, Darby & Cushman

[57] **ABSTRACT**

The present invention is directed to a method of forming a joint between end portions of two continuous strands, for example, synthetic filament yarns, that are arranged in overlapping engagement by bonding the end portions together with an adhesive material and shrinking a sheath that is formed solely by wrapping a tie-yarn of heat shrinkable material around the ends of the two strands.

12 Claims, 2 Drawing Figures

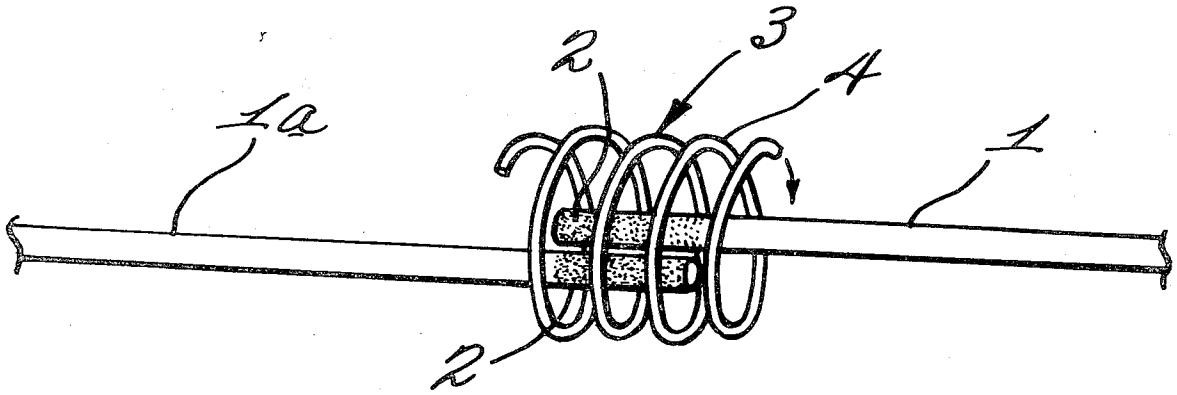

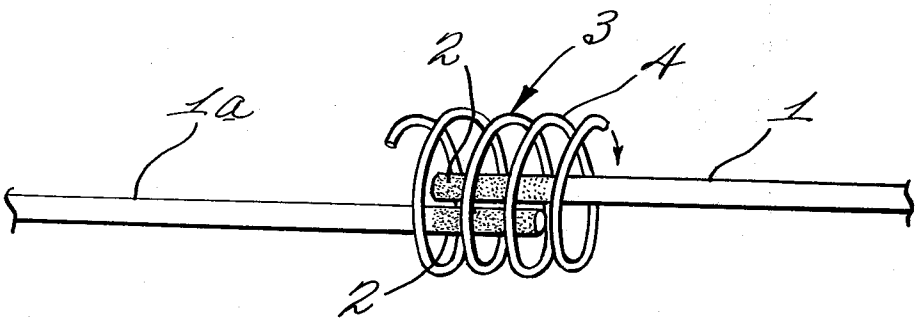

Fig. 1

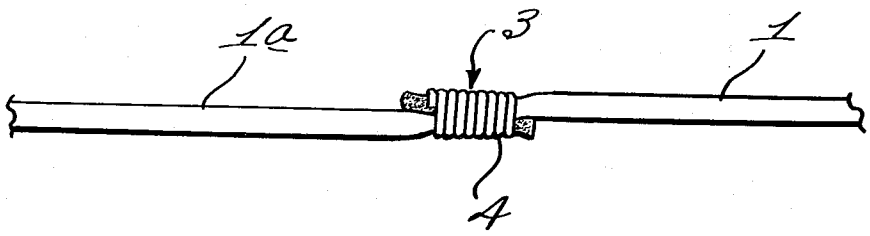

Fig. 2

METHOD OF JOINING CONTINUOUS STRANDS

CROSS REFERENCE TO RELATED APPLICATION

The instant application is a continuation-in-part of U.S. application Ser. No. 54,646, filed July 13, 1970.

The present invention relates to a method of forming a joint between the end portions of two continuous strands arranged in overlapping engagement.

By the expression "two continuous strands" is meant two continuous filaments or two continuous filament yarns.

By "overlapping engagement" is meant that the end portions of the strands are arranged in side-by-side overlapping relationship and, if desired, have a low level of twist imparted thereto. In the case when the strands are composed of continuous filament yarns, the filaments at an end portion of each yarn may be intermingled together to provide "overlapping engagement."

In the majority of textile processing operations it is necessary at some stage to join the end of one strand on a bobbin with the end of another strand on another bobbin in order to maintain a continuous supply of the strand. Knotting of the strands is well known but is not particularly attractive, especially when heavier denier strands are being joined because of the known low efficiency and bulkiness of the knots.

In the method according to the present invention an object is to form a joint between end portions of two continuous strands arranged in overlapping engagement by bonding the end portions together with an adhesive and shrinking a sheath formed by wrapping a tie-yarn of heat shrinkable material around the bonded end portions. An advantage for a sheath formed exclusively by wrapping is that a less bulky joint is produced which, as aforenoted, is more attractive.

The method is preferably carried out according to the invention by bringing an end portion of one strand into overlapping engagement with an end portion of the other strand, coating the engaging end portions with a solution of a polymeric adhesive, capable of adhering to the strands, in a solvent therefor which is not a solvent for the material of the strands, removing the solvent from the polymeric adhesive to form a bond between the engaging end portions of the strands, covering the bonded end portions by wrapping a heat-shrinkable tie-yarn around the bonded end portions to thereby form a spiral sheath, and thereafter shrinking the sheath. Alternatively, the solvent for the adhesive can be removed after the wrapping of the shrinkable tie-yarn sheath, as by heating, so that shrinkage of the sheath occurs simultaneously with solvent removal.

Other objects, advantages, and novel features of the invention will become apparent from the following detailed description of the invention when considered in conjunction with the accompanying drawing.

BRIEF DESCRIPTION OF THE DRAWING

FIG. 1 is a perspective exploded view illustrating a joint being formed by the method of the present invention; and

FIG. 2 is a perspective view showing the finished joint.

DETAILED DESCRIPTION OF THE PREFERRED EMBODIMENTS

In the drawings two strands to be joined are illustrated at **1** and **1***a* in overlapping relationship with their overlapped portions coated with adhesive. Each strand may be a continuous monofilament having a denier in the range 100 to 1,500, or may be a yarn composed of such monofilaments. Alternatively, the strands may be formed of yarns composed of lower denier filaments, for example, each yarn may have a yarn denier of 1,000 and a denier per filament of **10**.

The strands may be composed of filaments which are synthetic or man-made. The strands may be composed, for example, of a polyester or a polyamide, particular examples being poly(ethylene terephthalate) and poly(hexamethylene adipamide) or the strands may be composed of glass.

The level of twist which may, if desired, be imparted to the engaging end portions of the strands need only be low, of the order of 0.5 to 2 turns per inch.

A sheath **3** is formed in situ about the overlapped bonded ends of the strands **1**,**1***a* by tightly wrapping a shrinkable tie-yarn **4** in spiral form, as indicated by the arrow in FIG. **1**, around the overlapped portions of the strands, with the ends of the tie-yarn **4** being securely fastened to the overlapped strand portion. The tie-yarn **4** may be a single shrinkable monofilament or a low denier multifilament yarn, nylon or polyester being suitable. Apparatus which may be used for wrapping the tie-yarn is described in U.K. Patent Application No. 10432/**70**. The tie-yarn **4** is then subjected to a shrinkage treatment, for example, a heat treatment, which causes the sheath **3** formed by the tie-yarn **4** to tightly hold and grip the bonded, engaged end portions of the strands **1**,**1***a*.

It will be understood from the above that the wrapping of the tie-yarn **4** is carried out in situ at the overlapped strand portions by imparting progressive spiral movement to the tie-yarn. The operation therefore does not include preforming a sheath and then sliding the sheath longitudinally over the overlapped strand portions.

The molecular weight of the polymeric adhesive is chosen so that it forms tough films and yet does not yield solutions which are too viscous to apply to the ends of the strands to be joined. Preferably, the Intrinsic Viscosity of the adhesive polymer in a solvent therefor is between 0.4 and 0.8 measured at a temperature of 25°C. Furthermore, the adhesive polymer should not crystallise on heating.

The solvent for the adhesive polymer is preferably removed by the application of a stream of heated air to the area of the engaging end portions of the strands. For this purpose, the solvent should be sufficiently volatile to be readily evaporated at a temperature between 80°C. to 230°C. Desirably, the solvent should form free flowing homogeneous solutions of the adhesive polymer at 10% to 30% concentration.

The method of the invention is particularly applicable to the joining together of heavy denier strands which are ultimately to be used as reinforced materials in pneumatic tires for motor vehicles. For this particular application it has been found that the strength of the jointed strands should be at least 60%, and preferably at least 80%, of the strength of each strand. Also, the jointed strands should be capable of withstanding a stretch of at least 1% at a temperature of 200°C. to 240°C.

Typical conditions which have been found to enable such requirements to be achieved are:

a. The end portions of the strands should be in overlapping engagement of a length of at least 1.25 inches.

b. An application of the adhesive solution sufficient to cover the whole of the surface area of the joint.

c. A heat treatment is used to "set" the joint, i.e., to remove the solvent and shrink the sheath. Conveniently, hot air is used for this purpose which preferably has a temperature in the range 180°C. to 230°C.

d. The denier of the tie-thread should be about 500 denier. Conveniently, this is a 500 denier monofilament.

e. The shrinkage (at 150°C. in air) of the tie-yarn should be greater than 6% and preferably greater than 10%.

f. The tension under which the tie-yarn is wound around the end portions of the strands to form a sheath should be above 50 grams, and preferably should be of the order of 200 grams.

For strands composed of poly(ethylene terephthalate) or glass, a suitable adhesive is a solution in chloroform of an ethylene terephthalate/sebacate copolyester having 50 to 80 mole % of ethylene terephthalate in the polymer. A particularly suitable adhesive is a 20% solution of 40/**60** moles % ethylene isophthalate/terephthalate copolymer of Intrinsic Viscosity 0.67 in chloroform at 25°C.

It will of course be understood that various changes may be made in the form, details, arrangement and proportions of the components without departing from the scope of the invention.

What is claimed as novel and unobvious and desired to be protected by Letters Patent is set forth in the appended claims.

What is claimed is:

1. A method of forming a joint between the end portions of two continuous strands comprising the steps of: arranging the end portions in overlapping engagement, applying an adhesive only to the end portions to bond the end portions together, wrapping a heat-shrinkable tie-yarn in spiral form around the bonded end portions and shrinking the wrapped tie-yarn around the bonded end portions.

2. A method of forming a joint as claimed in claim **1**, including bringing an end portion of one strand into overlapping engagement with an end portion of the other strand, coating the engaging end portions with a solution of a polymeric adhesive, capable of adhering to the strands, in a solvent therefor which is not a solvent for the material of the strands, removing the solvent from the polymeric adhesive to form a bond between the engaging end portions of the strands, and then carrying out the wrapping and shrinking steps.

3. A method of forming a joint as claimed in claim **1**, including bringing an end portion of one strand into overlapping engagement with an end portion of the other strand, coating the engaging end portions with a solution of a polymeric adhesive, capable of adhering to the strands, in a solvent therefor which is not a solvent for the material of the strands, carrying out the wrapping step, removing the solvent from the polymeric adhesive to form a bond between the engaging end portions and simultaneously shrinking the wrapped tie-yarn.

4. A method of forming a joint as claimed in claim **1** wherein a heat treatment is used to remove the solvent and shrink the tie-yarn.

5. A method of forming a joint as claimed in claim **4** wherein the heat treatment utilises a stream of hot air at a temperature in the range 80°C. to 230°C.

6. A method of forming a joint as claimed in claim **1** wherein the tie-yarn is a shrinkable monofilament.

7. A method of forming a joint as claimed in claim **1** wherein the tie-yarn has a shrinkage greater than 6%, in air at 150°C.

8. A method of forming a joint as claimed in claim **1** wherein each strand is composed of a single monofilament having a denier in the range 100 to 1,500.

9. A method of making a joint as claimed in claim **1** wherein the strands are formed of glass.

10. A method as in claim **1** wherein the tie-yarn is a low denier multifilament yarn.

11. A method as in claim **1** wherein each strand is composed of a yarn made from monofilaments having a denier in the range 100 to 500.

12. A method as in claim **1** wherein the strands are formed of a material selected from the group consisting of polyester and polyamide.

* * * * *