318-135.

SR

8-26-75 XR 3,902,085

United States Patent [19]

Bizzigotti

[11] **3,902,085**

[45] **Aug. 26, 1975**

[54] **ELECTROMECHANICAL TRANSLATION APPARATUS**

[75] Inventor: **Richard A. Bizzigotti,** Walworth, N.Y.

[73] Assignee: **Burleigh Instruments, Inc.,** East Rochester, N.Y.

[22] Filed: **Nov. 25, 1974**

[21] Appl. No.: **526,500**

[52] **U.S. Cl.** **310/8.3;** 310/8; 310/8.6; 310/9.1; 310/9.6; 310/25; 310/26; 318/135

[51] **Int. Cl.**[2] **H01L 41/08**

[58] **Field of Search** 310/8, 8.1, 8.3, 8.5, 8.6, 310/9.6, 9.1, 9.4, 26, 25; 318/116, 118, 135

[56] **References Cited**

UNITED STATES PATENTS

3,138,749	6/1964	Stibitz	310/26
3,217,218	11/1965	Steele	318/118
3,218,534	10/1965	Casey	318/135
3,389,274	6/1968	Robertson	310/8.6

Primary Examiner—Mark O. Budd

Attorney, Agent, or Firm—Martin Lukacher, Esq.

[57] **ABSTRACT**

An inchworm translating device is disclosed which provides translation with a high degree of uniformity of motion. The device includes a piezoelectric driver having three driver sections in end-to-end relationship around the shaft. This driver is referenced to a housing and provides forces for moving the shaft with respect to the housing. The sections of the driver are interconnected by bridging members which assemble the driver sections in integral relationship and yet allow movement of the driver sections into and out of engagement with the shaft without imparting undesired motion to the shaft.

10 Claims, 3 Drawing Figures

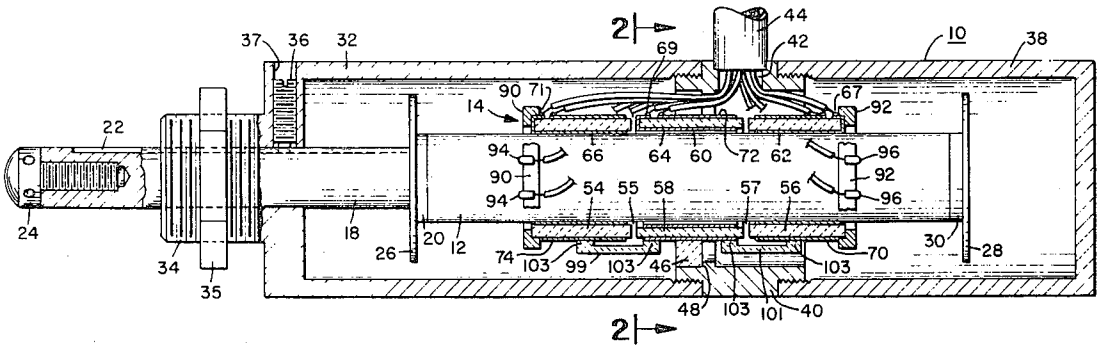

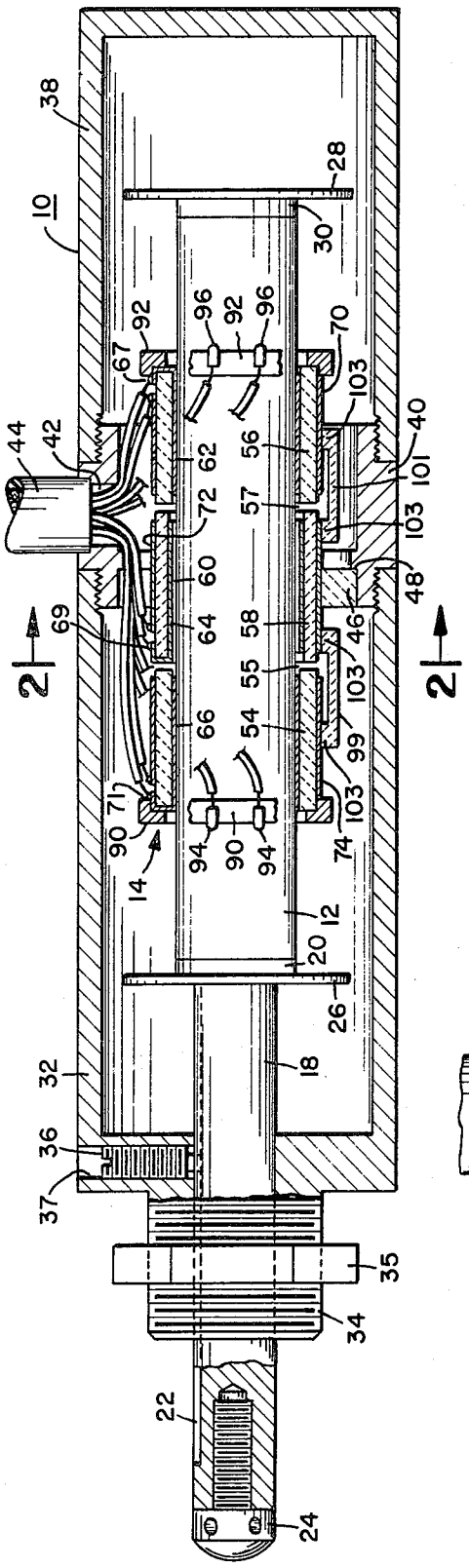

FIG. 1.

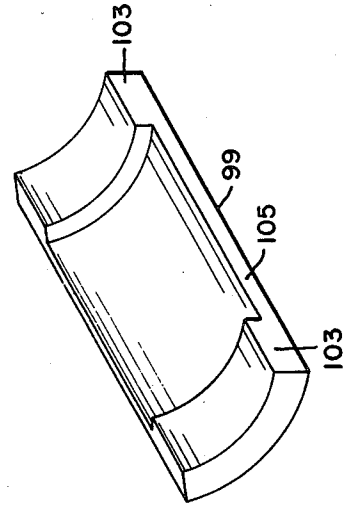

FIG. 3.

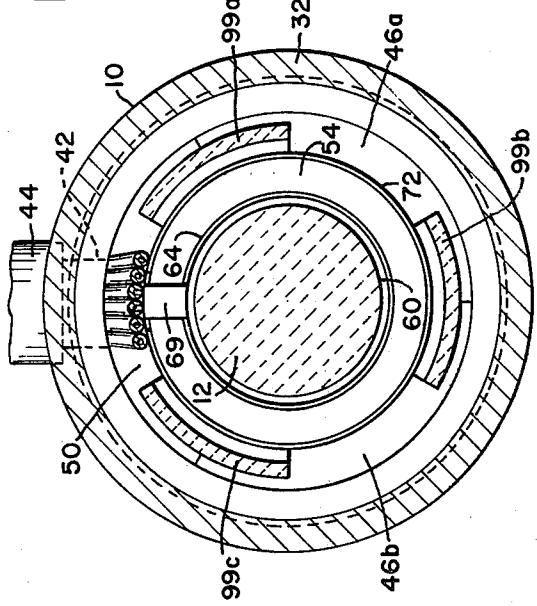

FIG. 2.

ELECTROMECHANICAL TRANSLATION APPARATUS

The present invention relates to electromechanical translation apparatus and particularly to electromechanical translators which are capable of motion in incremental steps and which are known as inchworms.

The present invention is especially suitable for use in linear actuators and positioners where precision and uniform travel is required, either continuously or in steps.

Reference is hereby made to U.S. Patent Application Ser. No. **474,831,** filed May **30, 1974** in the name of William G. May Jr., which has the same assignee as the present application.

The referenced application discloses an electromechanical translator of the type in which the present invention may be embodied. More particularly the translator described in the referenced application includes a housing and a shaft which is mounted in the housing for movement with respect to the housing. There is also mounted in the housing and referenced to the housing, a piezoelectric driver. The driver has a plurality of sections which are disposed in end-to-end relationship along the shaft and may be in the form of cylindrical tubes around the shaft. Thus, there may be three sections in the driver, a central section and two end sections on opposite sides of the central section. The side surfaces of the end section which face the shaft are disposed in juxtaposition with the shaft. The central section has its side surface which faces the shaft laterally spaced therefrom. In order to provide precise translatory motion of the shaft, voltage is applied to the end sections so as to bring them into engagement with the shaft; in other words, to clamp them on the shaft. A voltage, preferably in the form of a staircase voltage waveform is applied to the central section causing it to expand or contract in incremental steps, each step corresponding to a different step of the staircase waveform. The force due to the expansion or contraction of the central section is then transferred to the shaft by way of the end section which is clamped thereto. This force may also be transferred by the shaft to a load which can be accurately positioned or moved over the relatively long distance over which the shaft may be driven. The sequence in which the end sections are clamped to the shaft together with the sequence of contraction or expansion of the central section determines the direction of travel of the shaft.

It has been found that in accordance with this invention that the non-uniformity of motion of the shaft, and especially transient motions which may occur as the end sections are clamped and released from the shaft can be substantially eliminated. Particularly, such non-uniformities are reduced by interconnecting the adjacent sections by means of members which assemble the sections together in end-to-end relationship as a unitary structure, while at the same time leaving gaps or spaces between the opposed ends of the adjacent sections. The members connect the motion section, which is disposed between the clamping sections, to the clamping sections at their centers in the axial direction. The end sections change both in length and diameter with changes in the voltage applied thereto. When the end sections are clamped to or released from the shaft, any motion is bi-directional with respect to the axial center of the end sections. This bi-directional motion results in no shaft motion since the connection of the end sections is to their axial centers. Also any wear upon the chain is uniformly distributed. Thus, when a section is clamped to or released from the shaft, any motion occurring upon such clamping or release is not transferred to the shaft by way of any other section of the driver. Rather, such motion is lost in the gaps between the driver sections. Accordingly, discontinuities in motion of the shaft are prevented and more uniform motion produced by the translator.

Accordingly, it is an object of the present invention to provide improved electromechanical translation apparatus.

It is a further object of the present invention to provide an improved electromechanical translator of the inchworm type in which discontinuities in motion produced by the device are substantially eliminated.

It is a still further object of the present invention to provide an improved inchworm type electromechanical translator having greater uniformity in the motion of its output shaft than in translators of the same type heretofore provided.

The foregoing and other objects and advantages of the present invention will become more apparent from a reading of the following description in connection with the accompanying drawings in which

FIG. **1** is a longitudinal sectional view of an electromechanical translation device embodying the invention;

FIG. **2** is a sectional view of the device shown in FIG. **1,** the section being taken along the line **2—2** in FIG. **1**; and

FIG. **3** is an enlarged perspective view of one of the elements used in the device shown in FIGS. **1** and **2.**

Referring more particularly to the drawings, there is shown an electromechanical translator device having as its principal parts a cylindrical housing **10,** a shaft **12,** and a piezoelectric driver **14.** The driver is referenced to the housing by being attached thereto via an assembly which includes a cylindrical tube **40** which is part of the housing **10** as well as a pair of sector-shaped members **46** (the latter members being shown in FIG. **2** as **46***a* and **46***b*.

The shaft **12** has, attached to the front end thereof, a spindle **18** which forms part of the shaft assembly. The shaft itself is a cylindrical rod preferably made of material having the same thermal coefficient of expansion as the piezoelectric material in the driver **14.** A ceramic material which provides the requisite mechanical and thermal stability is also suitable for use in the shaft **12.** The spindle **18** is preferably of metal and has a flange **20** which is attached to the forward end of the shaft **12** as by means of an adhesive, such as an epoxy adhesive.

A metal having a low thermal coefficient of expansion is preferably used for the spindle **18.** The metal sold under the trade name Invar being suitable. A groove or key way **22** extends along the length of the spindle **18.** A screw **24** may be inserted into the tip of the spindle and may be used for the attachment of the spindle and therefore of the shaft to a load. This load may, for example, be various types of hardware such as optical mirrors and other precision mechanisms which require precision location, translation or other adjustments.

A ring **26** which may be a snap ring is located at the front of the flange **20.** Another ring **28** is located at the rear end of the shaft **12.** This ring may be provided as

an end flange on a boss **30** which is attached to the rear end of the shaft **12**. These rings **26** and **28** are of conductive material and provide parts of end limit switches for stopping the motion of the shaft, which is travelling in the forward (to the left) or rearward (to the right) direction.

The housing **10** has a forward section **32** of cylindrical shape. A threaded reduced diameter portion **34** at the front of the housing section **32** provides for attachment, as by a nut **35**, of the housing to a stand or other support for the translator device.

A threaded hole **37** extends radially through the front of the housing section **32**. A screw **36** in this hole **37** extends into the key way groove **22** and constrains the shaft assembly to longitudinal motion. The front ends of the housing section **32** and the driver **14** thus support the shaft **12** in the housing.

The rear end **38** of the housing **10** is a cylindrical cup which screws into the central cylinder **40**. The forward section **32** of the housing also screws into the central cylinder **40** so as to provide a unitary housing assembly.

The cylinder **40** has a radial opening **42** through which cable leads **44** extend to make contact with the driver **14** and the limit switches.

The piezoelectric driver is referenced to and held in the housing by means of a sector-shape member **46** which may be provided by two abutting sector-shape members **46*a*** and **46*b*** (FIG. 2). These members are disposed in the forward end in the cylinder **40** and are in abutment with an internal shoulder **48** of the cylinder **40**. The two parts **46*a*** and **46*b*** of the sector-shape member **46** occupy approximately **120°** each of the interperiphery of the cylinder **40**. The outer periphery of the sector-shape members are secured, as by means of an epoxy adhesive, to the cylinder **40**. The inner periphery of the sector **46** is secured to the driver **14**, preferably at the center (viz., at the midpoint of the length) of the driver **14**. An opening **50** is provided above the sector-shape members and along the upper portion of the cylinder **40** through which the leads extend from the driver and the end limit switches into the cable **44**.

The piezoelectric driver **14** is a cylindrical member in the form of a cylindrical tube around the shaft **12**. The driver is made up of a plurality of sections **54, 56** and **58**, each of which is a cylindrical tube. The front section **54** and the rear section **56** have a tight sliding fit with the shaft **12**. The center section **58** has the same outer diameter as the other sections **54** and **56**. The inner diameter of the central section **58** is, however, larger than the inner diameter of the forward and rear sections **54** and **56**. In other words, each of the sections have side surfaces which in the case of the illustrated sections are cylindrical surfaces which are laterally spaced from each other. These lateral surfaces are separated by a thickness which defines the radial dimensions of the end surfaces of the cylinder. The side surfaces of the forward and rear sections **54** and **56** which face the shaft **12** are closely spaced thereto while the side surface of the central section **58**, which faces the shaft **12**, is laterally spaced therefrom. The space is shown in the drawing as a cylindrical clearance **60**. This clearance is sufficiently large so that when the center section **58** is extended by piezoelectric action, the clearance exists between the side surface of the central section which faces the shaft and the peripheral surface of the shaft. All of the sections may be made of ceramic type piezoelectric material which may suitably be the lead zirconate-titanate material which is commonly known as PZT.

The end surfaces of the section are longitudinally spaced from each other in the direction of the axis of the shaft **12** so as to provide spaces or gaps **55** and **57** therebetween. These gaps are bridged by members **99** in the case of the front gape **55** and other members **101** in the case of the rear gap **57**. These members **99** and **101** assemble the sections as a unitary structure. For ease of assembly, three sets of members **99*a***, **99*b*** and **99*c*** are used to connect and assemble the forward and central section **54** and **58**, and three similarly disposed sets of members **101** interconnect and assemble the center and rear sections **58** and **56**. The connection of the members **99** is to the longitudinal center of the clamping section **54** and the connection of the members **101** is to the longitudinal center of the clamping section **56**.

Each of these members **99** and **101** is similar. The members are sector shaped, each sector encompassing approximately **60°**. The sectors are arranged **120°** apart around the gaps **55** and **57** which they bridge. The sector shaped members **99** and **101** are "U" shaped in longitudinal cross section and have a central portion **105** extending between legs **103**. The end legs **103** extend to the longitudinal center of the sections **54** and **56** and are there attached to the sections **54** and **56**. The central portion is spaced laterally away from the outer side surfaces of the drive sections which they connect. The legs extend radially inward to the driver section and are connected thereto as by epoxy adhesive. The sector shaped members **99** and **101** are desirably made of material having the same thermal coefficient of expansion as the material of the driver section **54, 56** and **58**, and are desirably of ceramic material, aluminum oxide being suitable.

Electrodes are provided on the outer as well as on the inner side surfaces of the driver sections. Silver which is fused to the sections may suitably provide the electrodes. Electrodes **62, 64** and **66** are provided on the inner side surfaces of the sections **56, 58** and **54**, respectively. These electrodes may be brought around an end surface of their respective section to the outer side surface thereof where paths **67, 69** and **71** of the electrode material are formed. These paths provide facility connection of the lead as by soldering. The outer side surfaces of the sections **56, 58** and **54** have electrodes **70, 72** and **74** formed thereon. These electrodes are separated from the paths **67, 69** and **71** and have individual ones of the leads connected thereto. Preferably the legs **103** of the sector-shaped members **99** and **101** which assemble the driver sections **54, 56** and **58** are connected after the electrodes are applied to the driver sections.

The limit switches, which include the rings **26** and **28**, are provided by rings of insulating material **90** and **92** to which pairs of conductive pads **94** and **96** are attached. When contact is made between a ring and its associated pads, a switch closure results which indicates that the shaft has moved to its maximum limit, either in the forward direction or in the switch closures between the ring **28** and the pads **96** or in the reverse direction when the closure is made between the pads **94** and the ring **26**.

The operation of the device shown in FIGS. **1** to **3** is obtained by applying voltages alternately to the elec-

trodes of the forward and rear sections **54** and **56** and then applying voltages to the central section **58** so as to contract or expand that section. The direction of travel of the shaft depends upon the sequence in which the voltages are applied to the forward and rear sections together with the sequence of the application of voltages for obtaining expansion or contraction of the center section **54.** These sequences and the electronic circuit apparatus for generating them are described in detail in the above-referenced application which is found in the name of William G. May, Jr. When the shaft is travelling, either in the forward or reverse direction, the forward and rear sections are alternately clamped and released from the shaft. Each clamping and release is followed by a contraction or expansion of the center section **58.** When an end (forward or rear) section is released, some longitudinal contraction thereof occurs. Similarly, when an end section is clamped to the shaft **12** some longitudinal expansion thereof occurs. Such contraction or expansion results in forces which are prevented from being transferred into discontinuities of motion of the shaft **12** by the arrangement of bridging members **99** and **101** which assemble the drivers in end-to-end but spaced relationship. The sections **54** and **56** which are clamped to and released from the shaft are attached to the central section at their longitudinal centers (viz, midpoints). By virtue of the bidirectional nature of the motion of the sections **54** and **56** about their midpoints, the motion is not transferred to the members **99** and **101.** The arrangement thus precludes any direct transfer of motion from one end section to the other via the central section **58.** Discontinuity in motion of the shaft which could arise upon the release of the forward or end sections **54** and **56** are thus avoided and more uniformity of motion obtained. It will be appreciated of course that the increments of such discontinuities may be extremely small, say less than a micron. Inasmuch as the translator devices provided by this invention can afford high resolution of motion within the range of such discontinuities, it is advantageous to the operation of the device that such discontinuities be eliminated.

From the foregoing description it will be apparent that there has been provided improved electromechanical translation apparatus. While an improved inchworm translator device has been described herein for purposes of illustrating the invention, it will be appreciated that variations and modifications thereof within the scope of the invention will undoubtedly suggest themselves to those skilled in the art.

Accordingly, the foregoing description should be taken merely as illustrative and not in any limiting sense.

What is claimed is:

1. Electromechanical translational apparatus which comprises

a housing,

a shaft axially movable with respect to said housing,

a piezoelectric driver attached to said housing, said driver having a plurality of sections, each having side surfaces and end surfaces,

said sections being disposed adjacent to each other in end-to-end relationship axially of said shaft with the end surfaces of said adjacent ones of said sections opposed to and spaced from each other,

At least one of said sections having one of its side surfaces facing and in juxtaposition with said shaft,

another of said sections having one of its side surfaces facing and laterally spaced from said shaft,

members disposed in bridging relationship with the opposed ends of the adjacent sections and the space therebetween, said members being connected to the side surfaces of said sections opposite to the side surfaces thereof which face said shaft so as to join said adjacent sections together with the center of said one section being connected to said members, and

means for applying voltage to said one section to bring said one section into engagement with said shaft and for also applying voltage to said other section to change the length thereof whereby to apply force to said shaft to translate said shaft with respect to said housing.

2. The invention as set forth in claim **1** wherein said piezoelectric driver has three of said sections which are disposed successively in a direction axially of said shaft, with the end surfaces of adjacent ones of said sections opposed to and spaced from each so as to define first and second gaps therebetween, a plurality of said members being provided and being disposed in bridging relationship with said first gap and over said second gap respectively, said members bridging said first gap being connected to the ones of said side surfaces facing away from said shaft of those of said sections which define said first gap at the longitudinal centers thereof, and said members bridging said second gap being connected to the ones of said side surfaces of those of said sections which define said second gaps so as to assemble said driver into a unitary structure.

3. The invention as set forth in claim **2** wherein the one of said three sections which defines both of said gaps is located central between the others of said three sections, said central section having the side surfaces thereof which faces said shaft laterally spaced therefrom, the others of said sections having the side surfaces thereof which face said shaft in juxtaposition with the surface of said shaft so as to engage said shaft when voltage is applied to said other sections and to transfer forces to said shaft for translating said shaft when voltage is applied to said central section to change the length thereof.

4. The invention as set forth in claim **1** wherein said shaft is cylindrical and said sections are cylindrical tubes around said shaft, said member being at least a sector of a cylinder and being disposed around said shaft and also around said sections in bridging relationship with the space therebetween.

5. The invention as set forth in claim **4** wherein said member is generally "U" shaped in a diametrical cross section taken through the axis of said shaft, and having legs extending radially inwardly to the outer side surfaces of different ones of said sections and being connected thereto, the central portion of said member being laterally spaced in a direction away from said sections and being disposed over said gap.

6. The invention as set forth in claim **5** wherein a plurality of said members are provided each being sector shaped and spaced from each other around the said sections and in bridging relationship with the space therebetween.

7. The invention as set forth in claim **6** wherein said members are constructed of ceramic material having the same coefficient of expansion as the material of said sections.

8. The invention as set forth in claim **3** wherein said shaft is cylindrical and said sections are cylindrical tubes around said shaft, said members being at least cylindrical tubular sections, which are disposed around said sections and in bridging relationship with said gaps therebetween.

9. The invention as set forth in claim **8** wherein a plurality of said members are provided for each of said gaps, said members being sector-shaped and spaced

from each other around said gaps.

10. The invention as set forth in claim **8** wherein said members are "U" shaped in longitudinal cross section and having end legs and a central portion, said legs being connected to the outer side surfaces of the sections on opposite sides of the gap and said central portions being laterally spaced from said side surfaces of said sections and bridging the gap therebetween.

* * * * *