United States Patent [19]

Choate et al.

[11] **3,894,237**

[45] **July 8, 1975**

[54] **METHOD AND APPARATUS FOR CURING INKS ON METAL CONTAINERS BY ULTRA VIOLET LIGHT**

[75] Inventors: **Gary E. Choate,** Golden; **Larry Mason Dugan,** Boulder, both of Colo.

[73] Assignee: **Coors Container Company,** Golden, Colo.

[22] Filed: **Feb. 19, 1974**

[21] Appl. No.: **443,367**

[52] **U.S. Cl.** **250/453;** 250/454

[51] **Int. Cl.**[2] **H01J 37/00**

[58] **Field of Search** 250/453, 454, 455, 492, 250/493, 504; 204/193

[56] **References Cited**

UNITED STATES PATENTS

3,452,195	6/1969	Brunner	250/453
3,530,294	9/1970	Rogers	250/453
3,664,188	5/1972	Kockott	250/453

Primary Examiner—Craig E. Church
Attorney, Agent, or Firm—Bertha L. MacGregor

[57] **ABSTRACT**

Disclosed herein is a method and apparatus for curing inks and decorative coatings on containers, particularly cans having a cylindrical body and closed end, the opposite end being open. The apparatus comprises a peg-chain type conveyor on which cans are mounted and rotated while being carried past an ultra violet light assembly including a lamp tube, reflector and mounting frame disposed at an angle to the path of movement of the conveyor. The peg construction comprises a center pin and a sleeve rotatably mounted on the pin. Rotation of the sleeve transmits rotary motion to the container mounted on the peg. The method comprises the application of an ultra violet sensitive coating to cans, placing a coated container on a peg of a chain conveyor, and transmitting rotary motion to the can while subjecting the container to a band of concentrated ultra violet light beamed on the rotated container in a helical pattern while it is moving past the light assembly.

7 Claims, 4 Drawing Figures

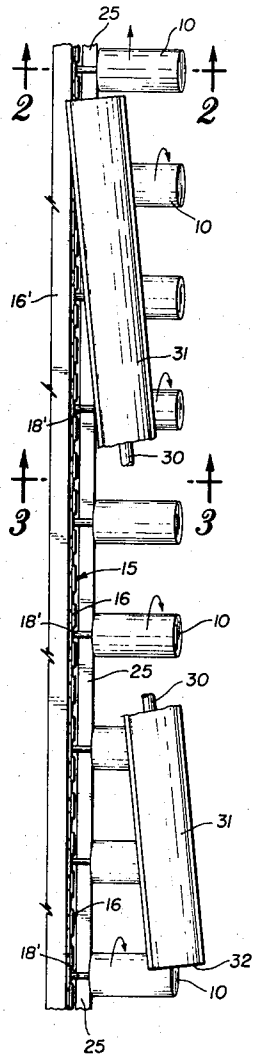

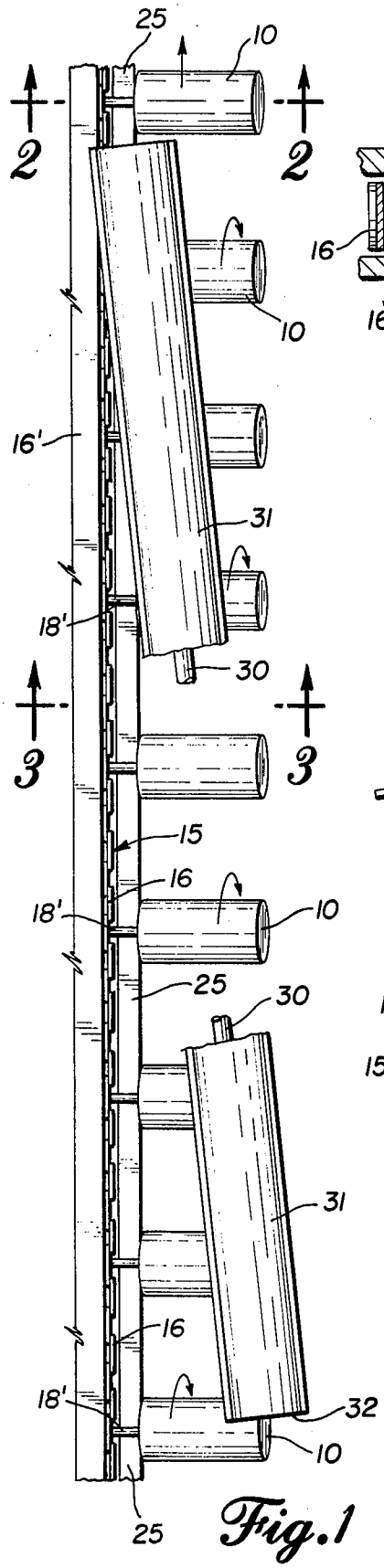

Fig. 1

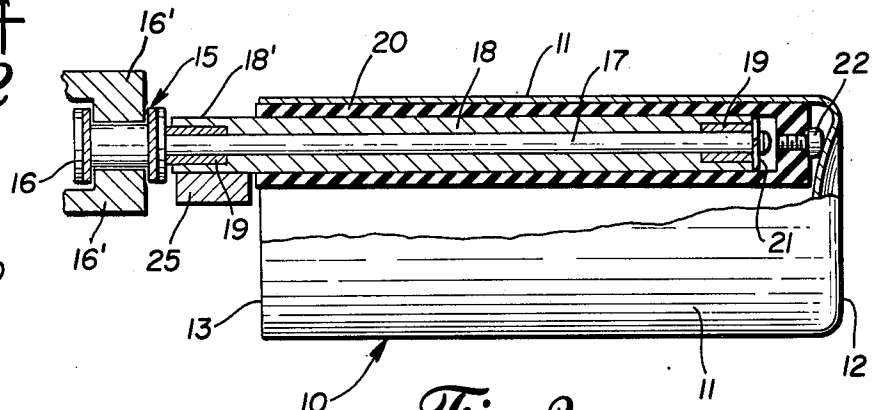

Fig. 2

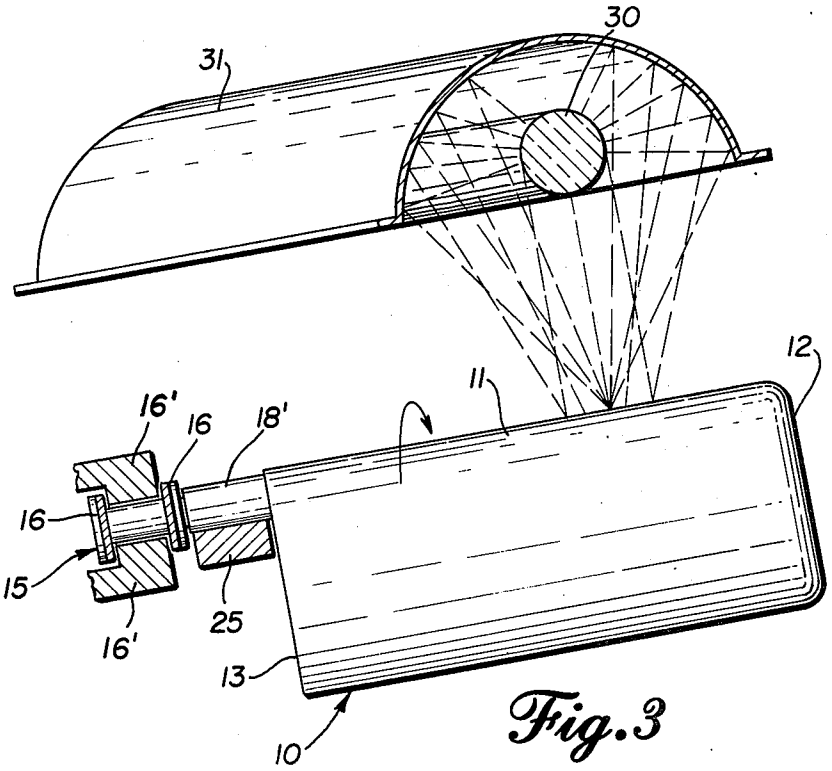

Fig. 3

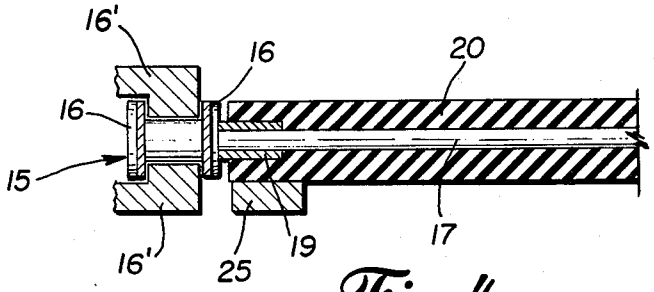

Fig. 4

METHOD AND APPARATUS FOR CURING INKS ON METAL CONTAINERS BY ULTRA VIOLET LIGHT

This invention relates to a method and apparatus for curing inks and other coatings on containers by ultra violet light. The inks and other coatings are ultra violet sensitive. The containers may vary, but the invention is described herein as applied to metal cans comprising a cylindrical body and one closed end, the opposite end being open.

It has been customary, in the art of printing and decorating containers, to employ standard inks and coatings and to subject decorated containers to drying processes that require high heat, followed by cooling. The treatment of decorated containers described herein utilizes ultra violet light in a curing process as distinguished from drying; the curing produces a different product, namely, a cured surface on the substrate, without using intense heat.

The source of artificial ultra violet light employed in this process is a long quartz tube filled with a mixture of argon and mercury in correct proportions. Ultra violet works with polymers, the chemical components of which are polyesters, monomers, and initiators. When ultra violet energy is applied in high concentration to polymeric coatings the result is a crosslinking of these substances, thus producing a cured surface on the substrate without using intense heat and without the cooling necessary to return the substrate to its original temperature. Further, since polymer inks do not contain any solvents, pollutants given off by prior art inking systems are eliminated.

The main object of this invention is to provide a method and apparatus for curing inks and coatings on metal surfaces and more particularly on the exteriors of cylindrical containers which have been printed or decorated in a printing machine, without subjecting the decorated containers to a drying process under high heat such as heretofore used in ovens which are parts of conventional printing systems.

Another object of the invention is to increase the efficiency of the ultra violet curing process by interrupting the beaming of the lamp on the substrate. In the application of this invention to cylindrical containers, this object is achieved by rotating the containers about their axes while supported on a moving conveyor so that surface areas of the containers are progressively and successively subjected to ultra violet light in a helical pattern and the beaming of the light on different areas is interrupted during each rotation of the container.

In the drawings:

FIG. **1** is a plan view of apparatus embodying the invention for curing inks on decorated containers, showing a plurality of such containers mounted on pegs on a peg-chain type of conveyor moving past an ultra violet lamp mounted in a reflector, and including means for rotating the containers.

FIG. **2** is an elevational view, partly in section, in the plane of the line **2—2** of FIG. **1**, on an enlarged scale, of one of the containers mounted on a peg and showing also the means for rotating the container.

FIG. **3** is a transverse sectional view, on an enlarged scale, in the plane of the line **3—3** of FIG. **1**.

FIG. **4** is a fragmentary sectional view of a modified form of peg which may be substituted for the peg of FIG. **2**.

In the embodiment shown in the drawings, the invention has been applied to cans **10** each having a cylindrical body **11** and integrally formed closed end **12**. The opposite end **13** is open. The cans **10** have been decorated externally on their bodies **11** in a printer (not shown) in which the cans are transferred from the printing mechanism to a peg-chain type conveyor **15** comprising a chain **16**, chain guide **16'** and a conventional pin **17** which is the center of the peg of this invention. In one embodiment of this invention, (FIG. **2**), the pin **17** is covered by a steel sleeve **18** mounted on brass bushings **19**. A sleeve **20** of yieldable material such as ethylene or propylene covers the steel sleeve **18**. The sleeve **20** extends from the outer end of the sleeve **18** inwardly but not to the inner end of the sleeve **18**. The sleeve is exposed in the area indicated at **18'**. The steel sleeve **18** is retained by any suitable means **21** on the inner pin **17**. The outer sleeve **20** preferably extends over the outer end of the inner structure and has a nylon rivet **22** on its outer end. In the modification shown in FIG. **4**, the sleeve **20** is mounted directly on the center pin **17**. In the embodiment of the peg shown in FIG. **2**, the sleeves **18** and **20** rotate on the pin **17**. In the modification of FIG. **4**, the sleeve **20** rotates on the pin **17**.

The exposed inner end **18'** of the sleeve **18**, between the sleeve **20** and the conveyor chain **16**, is contacted by a bar **25** which may be stationary or a moving surface for the purpose of rotating the peg sleeve **20**, or the sleeves **18** and **20**, on the pin **17**, while the conveyor chain is moving past the bar **25**. Thus rotary motion is transmitted to the cans **10** which are transferred to the pegs as the chain conveyor passes transfer means (not shown).

The source of ultra violet light is the lamp tube **30** mounted in a reflector **31** in a frame **32**. This assembly is located in an oven (not shown). The ultra violet light assembly is disposed at a slight angle to the conveyor chain and the cans mounted on the pegs. The result is that bands of concentrated ultra violet light are beamed on the cans progressively in a helical pattern on the sides alternately exposed to the light rays reflected by the reflector **31**. The rotary movement of the cans on their peg supports results in interrupted application of ultra violet on the can surfaces thus alternately exposed to the lamp **30**. Experiments indicate that the curing effectiveness of the ultra violet is enhanced by interrupting or "chopping" the light beams. This enhancement is achieved by this invention by the interrupted exposure of the surfaces of the cans to the light beams due to rotation of the cans.

As shown in the drawings, the angle of the ultra violet lamp assembly to the path of travel of the conveyor **15** and containers **10** mounted thereon, is approximately 10°, but this may vary according to the speed of travel of the conveyor, the length of the cans, and the time required to effect the curing of the decorated surfaces of the containers **10**. The conveyor **15** is tilted slightly as shown in FIG. **3**, to keep the cans on the pegs.

We claim:

1. Apparatus for curing inks and decorative coatings on containers comprising

a. a conveyor having container rotating means on which decorated containers are mounted for rotation while being carried by the conveyor,

b. means for rotating said container rotating means, and

c. an ultra violet light assembly including a longitudinally extending lamp tube and reflector, said assembly extending at an oblique angle to the path of travel of the conveyor for beaming a band of concentrated ultra violet light on the rotated containers while the containers move past the light assembly, the angle at which the assembly extends relatively to the path of travel of the conveyor being determined by the axial length of the containers such that each container receives bands of ultra violet light in helical pattern progressively from end to end of the container body while it is carried by the conveyor past the assembly.

2. The apparatus defined by claim **1,** in which the containers are externally decorated with ultra violet sensitive inks or coatings.

3. The apparatus defined by claim **2,** in which the inks or coatings are polymeric inks or coatings.

4. The apparatus defined by claim **1,** in which the conveyor is a peg-chain type conveyor, each peg comprising a pin extending at a right angle to the chain of the conveyor, and a sleeve of yieldable material rotatably mounted on the pin and frictionally engaging the interior of the container body.

5. The apparatus defined by claim **4,** in which the containers have cylindrical bodies closed at one end and open at the other end, and the said pegs enter the containers through said open ends.

6. The apparatus defined by claim **4,** in which the means for rotating the containers is a surface adjacent the conveyor positioned to contact the sleeves on the pins of the pegs as they pass said surface.

7. The apparatus defined by claim **6,** in which the contacting surface adjacent the conveyor is a stationary bar.

* * * * *

Notice of Adverse Decision in Interference

In Interference No. 99,325, involving Patent No. 3,894,237, G. E. Choate and L. M. Dugan, METHOD AND APPARATUS FOR CURING INKS ON METAL CONTAINERS BY ULTRA VIOLET LIGHT, final judgment adverse to the patentees was rendered Apr. 14, 1977, as to claims 1, 2, 4 and 5.

[*Official Gazette August 2, 1977.*]