United States Patent [19]

Savage, Jr.

[11] **3,887,803**

[45] **June 3, 1975**

[54] **LIGHT EMITTING DIODE DEVICE**

[76] Inventor: **John M. Savage, Jr.**, Los Angeles, Calif.

[22] Filed: **May 28, 1974**

[21] Appl. No.: **474,094**

[52] **U.S. Cl.** ..... **240/151;** 174/138 G; 339/113 R; 339/119 L; 339/125 L; 340/381

[51] **Int. Cl.**[2] **F21V 17/00;** G09F 9/14

[58] **Field of Search** ..... 240/151, 152, 8.16; 340/381; 174/138 G; 339/113 R, 119 L, 125 L

[56] **References Cited**

UNITED STATES PATENTS

2,599,361	6/1952	Beal	340/381 X
2,946,994	7/1960	Dumke et al.	340/381
3,207,954	9/1965	Elliott	174/138 G
3,229,083	11/1966	George, Jr.	240/152 X
3,286,255	11/1966	Sanchez	240/151 X
3,435,449	3/1969	Sloan	340/381
3,604,918	9/1971	Cook	240/8.16
3,611,360	10/1971	Bailey	240/152 X
3,777,137	12/1973	Costanzo et al.	240/152 X
3,818,486	6/1974	Bailey	340/381

FOREIGN PATENTS OR APPLICATIONS

1,043,359	9/1966	United Kingdom	174/52.5

Primary Examiner—Joseph F. Peters, Jr.
Attorney, Agent, or Firm—William W. Haefliger

[57] **ABSTRACT**

A light emitting diode device which includes an outer housing having a cylindrically shaped enlarged head and an integrally formed extended body portion. The head has a socket formed by an interiorly presented side wall sized and shaped to receive the skirt section of a lens. A recess is formed on the interiorly presented side wall of the socket and is sized to accommodate a projecting locking member on the skirt section of the lens. The body of the housing includes a chamber which is designed to accommodate a resistor and which is, in turn, soldered or otherwise connected to a light emitting diode within the housing in such manner that the diode and the resistor may be removed from the housing as a single unit.

17 Claims, 11 Drawing Figures

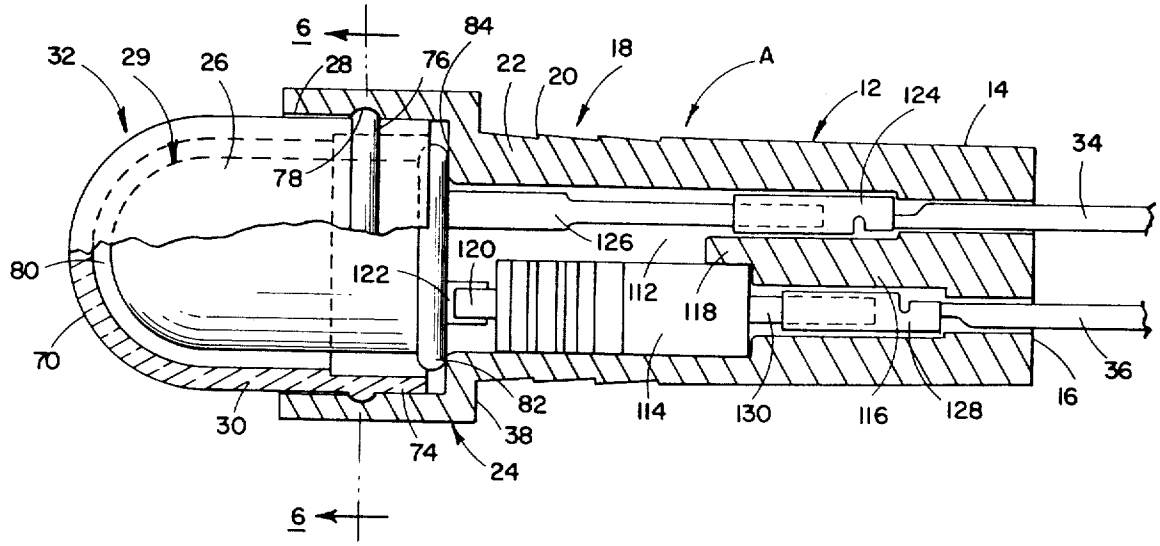

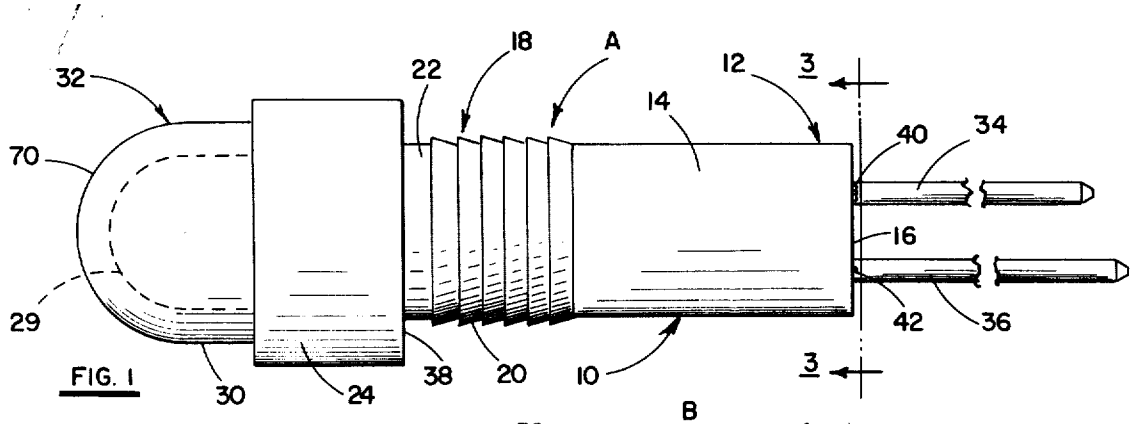

FIG. 1

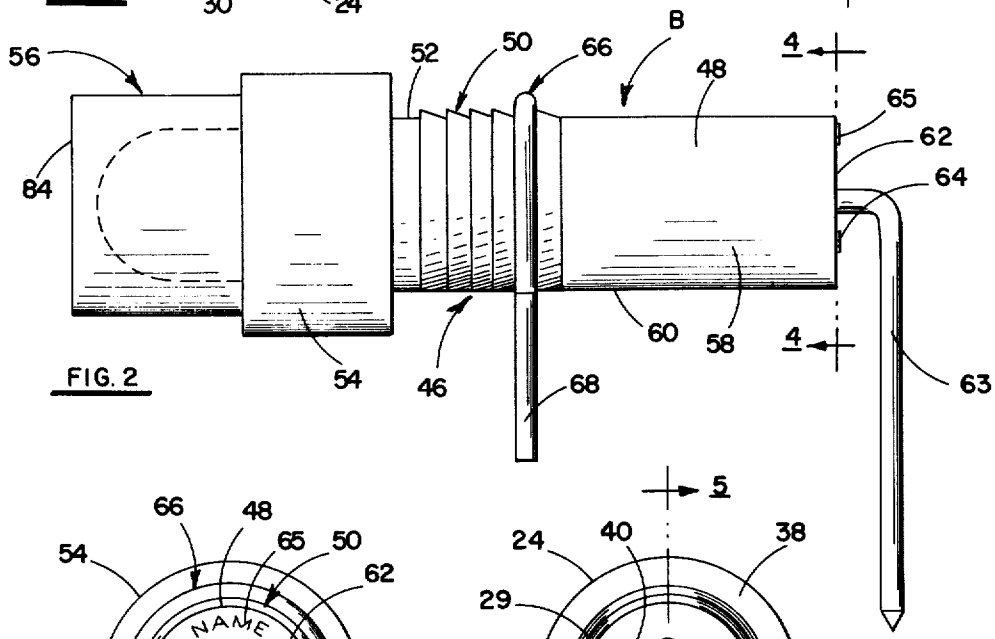

FIG. 2

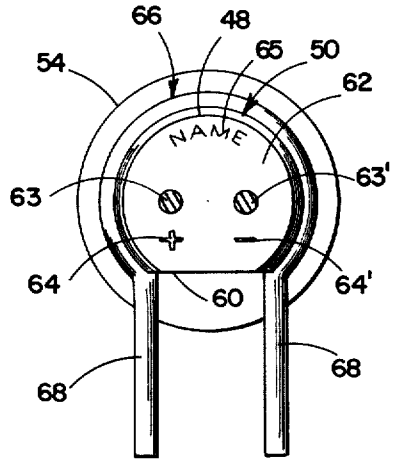

FIG. 4

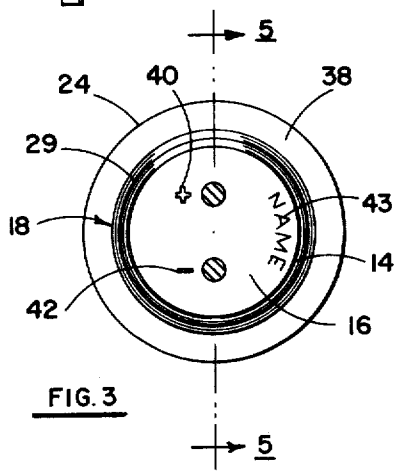

FIG. 3

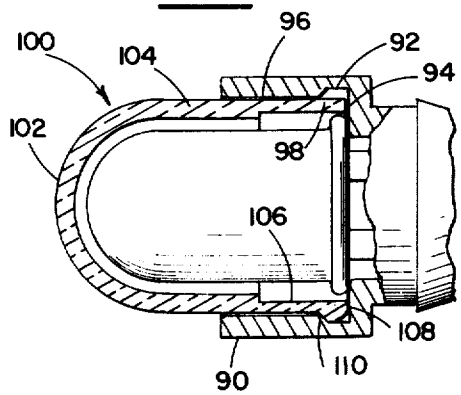

FIG. 11

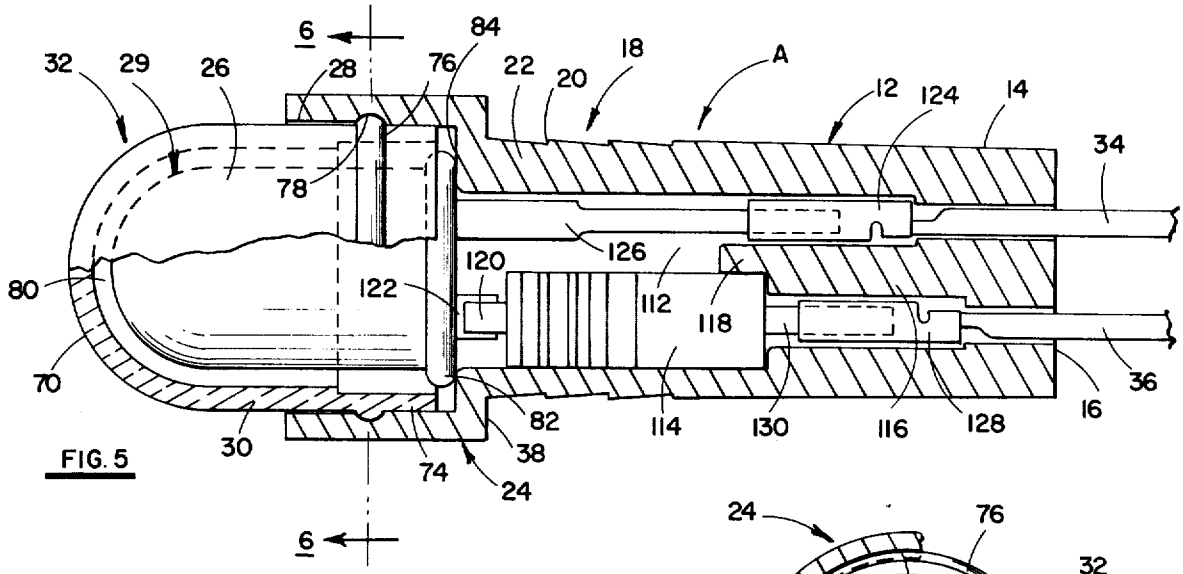

FIG. 5

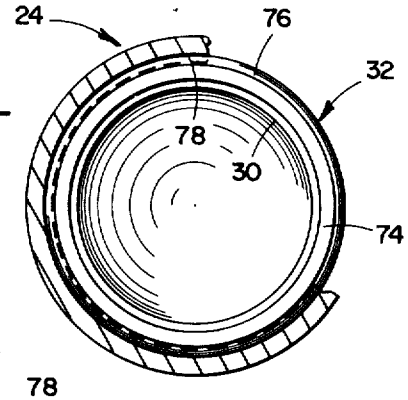

FIG. 6

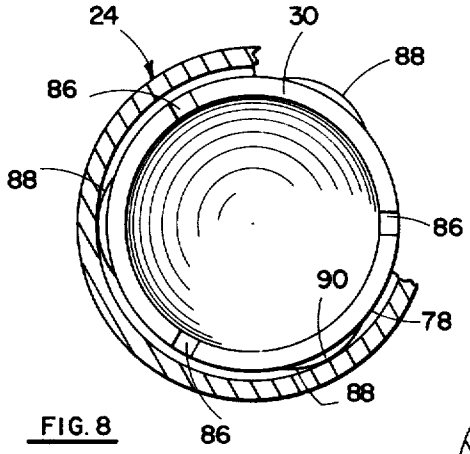

FIG. 8

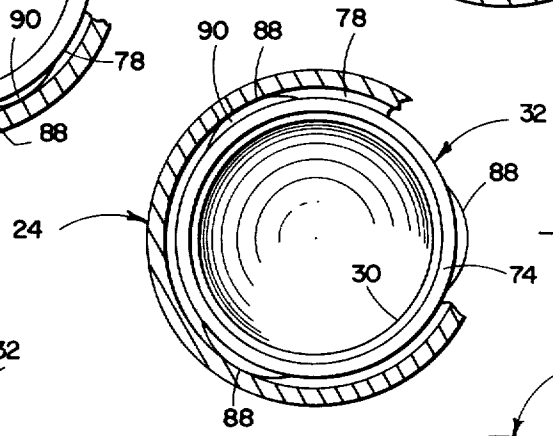

FIG. 7

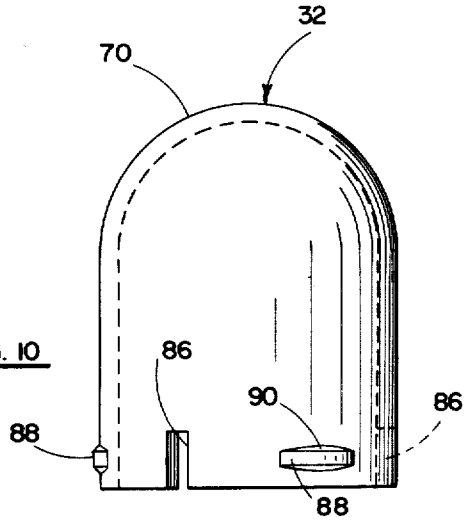

FIG. 10

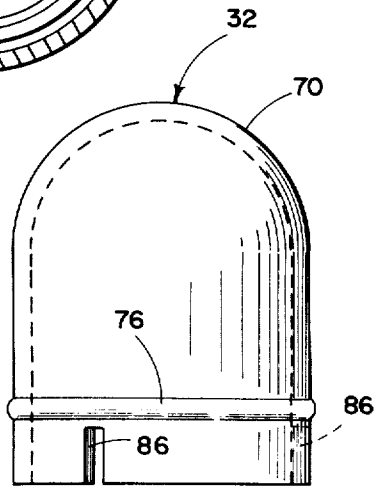

FIG. 9

LIGHT EMITTING DIODE DEVICE

BACKGROUND OF THE INVENTION

This invention relates in general to certain new and useful improvements in light emitting diode devices, and more particularly, to unique modular components for constructing light emitting diode devices.

In recent years, light emitting diodes, or so-called "LED's," have become quite popular and extensively used in a wide variety of electronic apparatus and systems. Normally, the light emitting diode is included with an outer housing of the type which comprises a body and an integrally formed head. The diode is normally contained within the head and a lens is removably attached to the head. When the light emitting diode per-se is included within the housing and covered by a lens, this combination is usually referred to as a "light emitting diode device," or a "LED device."

Light emitting diodes per-se represent a significant advance over the prior art of radiation emitting devices. However, little attention has been directed to the housings in which these diodes are used and these housings suffer a number of deficiencies. Many of the housings or so-called "holders" included an integrally formed boss or raised area on the back wall so that the back wall of the housing could be spaced from a circuit board or similar substrate or mounting member in order to permit flux-washing after wave soldering operations. However, the very provision of this extended boss created a difficulty in mounting the housing to a circuit board or similar substrate. Moreover, those commercially available light emitting diode devices are not designed so that the device can be inserted into D type apertures on a circuit board or similar substrate or other display device.

One of the principal drawbacks of the commercially available light emitting diode devices is that they are not constructed of modular components. Consequently, an individual lens must be designed for a particular individual housing. Moreover, each lens-housing combination is uniquely designed to accommodate only one type of light emitting diode. Therefore, it is necessary to produce a large variety of sizes and shapes of these various light emitting diode devices. Consequently, each user of light emitting diode devices must carry a large inventory of such devices including every size and shape thereof which may be utilized in any particular system.

The commercially available diode devices also suffer from another serious disadvantage in that the entire device must be discarded and replaced by a new device when the diode has burned out, or is otherwise inefficient for its intended purpose. The present commercially available diode devices include the diode which is permanently affixed within the housing and usually include a resistor which is also permanently affixed within the housing. Consequently, even if the resistor should become faulty, it is necessary to replace an entire diode device. The removal of the diode device from a circuit board or other form of apparatus not only provides economic waste, but is costly in terms of the labor time required to remove the device and solder a new one in place.

It is therefore the primary object of the present invention to provide light emitting diode devices of the type stated which permit replacement of a diode or electronic component, such as a resistor, without removal of the diode housing from its mounted position on a substrate.

It is the further object of the present invention to provide a system including modular components capable of being connected in a variety of combinations to provide a variety of light emitting diode devices.

It is an additional object of the present invention to provide light emitting diode devices of the type stated which can be constructed at a relatively low cost and which are highly efficient in their operation.

With the above the other objects in view, my invention resides in the novel features of form, construction, arrangement and combination of parts previously described and pointed out in the claims.

GENERAL DESCRIPTION

The present invention can be described in general terms as a light emitting diode device which comprises an outer housing. This housing is provided with an elongated body and an enlarged head connected to the body and preferably is integral with the body. This head is provided with an interiorly presented wall forming a socket therein. The socket is adapted to receive a radiation emitting diode in such manner that at least a portion of the diode communicates with the socket. A lens is also provided with the diode device. This lens includes an outer section and an annular skirt section projecting from the outer section. The skirt section of the lens is sized to removably extend within the socket.

In one aspect of the present invention, a recess is formed on the interiorly presented wall of the socket. A somewhat resilient projecting locking means is provided on the skirt section of the lens and is sized and located to fit within the recess, when the skirt is introduced into the socket. In this way, the lens may be removably retained in the housing.

In one embodiment of the present invention, the resilient projecting locking means is an annular ring which extends around the skirt section. In another embodiment of the present invention, this locking means comprises a plurality of projecting elements which are circumferentially spaced around the skirt section in spaced apart relationship. These projecting elements preferably have obliquely located walls which are designed to extend within the annular recess on the interiorly presented wall.

In a further modified form of the light emitting diode device of the present invention, the skirt section is designed to snugly engage the interiorly presented wall so as to be snuggly, but nevertheless removably, received within the socket. In this way, the lens may be pulled from and inserted into the socket in a somewhat snap-fitting manner.

In an additional embodiment of the present invention, the interiorly presented wall is tapered inwardly to produce a diametrally reduced inner end. In still a further embodiment of the present invention, the skirt section of the lens is provided with at least one slit to permit diametral contraction and expansion of the skirt section. Generally, a plurality of circumferentially spaced axially extending slits are provided in the skirt section.

The housing of the present invention may be cylindrical in shape with a substantially flat back wall so that the housing can be mounted in an upright position. In another embodiment of the present invention, the body of the housing may be provided with one flat wall so

that the housing can be mounted on a circuit board or similar structure in a relatively flat position. In addition, this latter shape enables insertion of the housing into a D-type hole on a circuit board or other receiving member. This flat wall preferably extends axially along the body for the full axial length of the body.

In a preferred aspect of the present invention, the body has a transversely extending back wall which extends across the body. In one embodiment, a pair of conductive terminals extend through the back wall and are provided for connection to a source of power. In another embodiment of the present invention, the conductive terminals extend through the back wall and a clip extends around the arcuately shaped annular side wall of the body of the housing for mounting the housing to the substrate. In actual practice, this clip has a portion thereof which is wrapped about a portion of the arcuately shaped annular wall so that it is retentively held thereon.

One of the unique features of the present invention is that the body of the housing is provided with a chamber which communicates with the socket. A radiation emitting diode is locatable within this socket and has at least one electrical diode terminal. A resistor or other form of electronic component is locatable in the chamber and is capable of being attached to the electrical diode terminal. Generally, this attachment is formed by means of soldering. The housing includes a retention means in order to retentively, but nevertheless removably, hold the resistor within the chamber. This retention means preferably adopts the form of an arm which extends from the back wall of the body. In this way, the resistor and the diode may be removably held within the housing so they can be removed therefrom as a single unit.

In another salient embodiment of the present invention, the back wall of the housing is provided with a pair of embossments, and each of which is located in close proximity to a respective one of the pair of terminals extending from the back wall. This first embossment has a shape of a conductive terminal designation, such as a "+" sign and the second embossment also has the shape of another conductive terminal designation, such as a "−" sign. In addition, a third embossment means in the form of information bearing indicia, as for example, a name or part number may be provided on the back wall and which is spaced from the first and second embossments.

The present invention may also be described as a system of modular components which are used to construct various forms of light emitting diode devices. This system comprises a plurality of housings of the type described. This system also includes the plurality of radiation emitting diodes of the type described. Some of these diodes have a size which differ from other of the diodes. Nevertheless, each of the diodes are sized to be received and accommodated by the sockets in any of the housings. Moreover, this system comprises a plurality of lenses and each of these lenses may adopt any of the forms of construction as previously described. Some of the lenses have a size and shape which differ from others of the lenses. Again, the skirt sections of each of these lenses are sized to snugly, but nevertheless removably, engage the ineriorly presented wall of the sockets in each of the housings. In this way, the lenses may be pulled from and inserted into the socket of any of the housings in somewhat of a snap-fitting manner.

BRIEF DESCRIPTION OF THE DRAWINGS

Having thus described the invention in general terms, reference will now be made to the accompanying drawings in which:

FIG. **1** is a side elevational view of a light emitting diode device constructed in accordance with and embodying the present invention;

FIG. **2** is a side elevational view of a modified form of light emitting diode device constructed in accordance with and embodying the present invention;

FIG. **3** is an end elevational view of the diode device of FIG. **1** substantially taken along line **3—3** of FIG. **1**;

FIG. **4** is an end elevational view of the diode device of FIG. **2** substantially taken along line **4—4** of FIG. **2**;

FIG. **5** is a vertical sectional view taken along line **5—5** of FIG. **3**;

FIG. **6** is a vertical sectional veiw taken along line **6—6** of FIG. **5** and showing one form of locking means for retaining a lens within a housing forming part of the diode device;

FIG. **7** is a vertical sectional veiw, similar to FIG. **6**, and showing another form of locking means for retaining a lens within a housing;

FIG. **8** is a vertical sectional view, similar to FIG. **7**, and showing a skirt section forming part of the lens;

FIG. **9** is a side elevational view of one form of lens constructed in accordance with and embodying the present invention;

FIG. **10** is a side elevational view of a modified form of lens constructed in accordance with and embodying the present invention; and

FIG. **11** is a fragmentary vertical sectional view, similar to FIG. **5**, and showing a further modified form of locking means for retaining a lens within a housing.

DETAILED DESCRIPTION

Referring now in more detail and by reference characters to the drawings which illustrate practical embodiments of the present invention, A designates a light emitting diode device which is more fully illustrated in FIg. **1** of the drawings. The light emitting diode device A generally comprises a body **10** which includes a cylindrical section **12** having an annular exterior side wall **14** which merges into a relatively flat back wall **16.** The cylindrical section **12** integrally merges into an axially extending serrated section **18** which includes a plurality of wedge shaped ridges **20.** Moreover, the serrated section **18** merges into a connecting sleeve **22** which in turn integrally merges into an enlarged head **24.**

Referring to FIG. **5**, it can be observed that the head **24** is provided with a cylindrically shaped socket **26** formed by an interiorly presented wall **28.** The socket **26** is sized and designed to acommodate a light emitting diode **29.** Moreover, the socket **26** is designed to accommodate the skirt **30** of a lens or a so-called "lens cap" **32.** The actual details of construction of the means for retaining the lens **32** within the socket **26** is hereafter described in more detail.

Extending through the back wall **16** and projecting outwardly therefrom is a pair of conductive terminals **34** and **36,** often referred to as "pins" or "posts." These pins **34** and **36** are sized to extend through holes formed in a circuit board or other substrate (not shown) and thereafter bent and soldered to a conduc-

tive strip or other electrical conductor. In this way, power is delivered to the light emitting diode for energizing the same. Moreover, it can be observed that the light emitting diode A may be mounted in the upright position so that the back wall **16** is disposed in juxtaposed relationship to the flat surface of the circuit board or similar substrate.

In many applications, the interior body portion of the diode device A could be sized to extend through a circular aperture within a circuit board of similar substrate. In this case, the serrated section **18** provides somewhat of a snap-type locking arrangement within the aperture. Moreover, the enlarged head **24** provides a rearwardly presented shoulder **38** which would be designed to engage the flat surface of the printed circuit board for mounting. In like manner the diode devices of the present invention are adapted for panel mounting in various forms of apparatus.

In the prior art, it was common to provide an embossment on the back wall **16** to engage the circuit board or other substrate so that the back wall **16** would remain in spaced apart relationship to the flat surface of the circuit board. This embossment was generally provided in order to facilitate flux washing after a wave soldering operation. Moreover, the prior art provided a printed indicia next to the terminals **34** and **36** to indicate either a positive or negative terminal. The present invention obviates the need of an embossment and further provides indicia in the form of a pair of embossments **40** and **42**, in the manner as illustrated in FIG. **3** of the drawings. It can be observed that the embossment **40** is located in close proximity to the terminal **34** and the embossment **42** is located in close proximity to the terminal **36**. In this way, it is possible to obviate the need of printing the terminal designations on the back wall **16** and further, the pair of embossments **40** and **42** actually facilitates the mounting of the housing **10** in an upright position on the circuit board.

Also located on the back wall **16** are a plurality of embossed letters **43** which are spaced apart from the embossments **40** and **42** and are preferably located along the periphery of the back wall **16**. The letters may adopt the name of the manufacturer or distributor, etc., of the devices of the present invention. These letters may also adopt the form of a trademark, or other similar designation. The embossed letters **43** also cooperate with the embossments **40** and **42** by enabling the housing to be supported in an upright position for purposes of mounting.

FIG. **2** illustrated a modified form of light emitting diode device B constructed in accordance with and embodying the present invention. The diode device B also includes an outer housing **46** having a body **48** which, in turn, integrally merges into a serrated section **50**. Moreover, the serrated section **50** integrally merges into a connecting sleeve **52** which, in turn, is integrally formed with an enlarged head **54**. In like manner, it can be observed that the head **54** is designed to accommodate the lens **32**, illustrated in FIG. **1**, or otherwise a modified form of lens **56**, as illustrated in FIG. **2**. In the case of the housing **10**, the body **12** was cylindrical in cross section as illustrated in FIG. **3** of the drawings. However, the body **48** includes an arcuately shaped wall **58** which is cylindrical for the greater portion of its annular surface and integrally merges into a flat wall **60**, in the manner as illustrated in FIG. **4** of the drawings. Moreover, by further reference to FIG. **2**, it can be observed that the flat wall **60** extends for the entire length of the body **48** including the serrated section **50** and the connecting sleeve **52**. By means of this construction, the diode device B can be laid in a flatwise position on the circuit board or other substrate so that the flat wall **60** engages the upper surface of the circuit board.

The body **48** is also provided with a relatively flat back wall **62** and projecting through the back wall **62** are a pair of conductive terminals or pins **63** and **63'**. Moreover, the back wall **62** is provided with a pair of outwardly extending integrally formed embossments **64** and **64'** which both provide terminal indicia for the two terminals **63** and **63'**. Moreover, each one of the embossments **64** and **64'** is located in close proximity to respective ones of the terminals **63** and **63'**. In this case, by reference to FIG. **4**, it can be observed that the embossment **64** adopts a form of a "plus" sign and the embossment **64'** adopts the form of a "negative" sign. For that matter, these embossments **64** and **64'** could adopt any other form of indicia. In addition, the back wall **62** is provided with the embossed letters **65** representing the name, manufacturer, trademark, etc. of the party producing the devices of the present invention.

A clip **66** is wrapped about the serrated section **50** and is integrally provided with a pair of downwardly extending terminal arms **68**. The arms are also sized to fit within and extend through properly sized and spaced apertures in a circuit board or similar substrate. The portions of the arms extending through the circuit board are then bent at right angles to retentively hold the housing onto the circuit board.

The light emitting diode device B is designed to be disposed on the surface of a printed circuit board or other substrate in a flatwise condition as indicated above. In this case, the two conductive terminals **63** and **63'** would also extend through suitable apertures formed within the circuit board. Thereafter, these terminals **64** and **68** could be bent to the desired position and soldered or otherwise connected to other forms of conductors. However, it should be observed that the pin **63'**, in place of extending through the rear wall **62**, could be substituted for the clip **66**, and wrapped about the serrated section **50** with one end thereof extending downwardly beyond the flat wall **60**. In this way, the pin **63'** could also function as the retaining clip, thereby eliminating the need for the retaining clip. The opposite end of the pin **63'** would extend through a suitable aperture (not shown) in the housing for operative connection to the diode.

The details of construction of the head **24** and the lens **32** are more fully illustrated in FIGS. **5** and **6** of the drawings. The lens **32** includes the skirt **30** which is cylindrical in shape and integrally merges into a hemispherical end dome **70**. The inner end of the skirt **30** which defines the open end of the lens **32** is provided with a section **74** of reduced thickness. In this way the section **74** is capable of yielding somewhat upon entry into the socket **26**. It can be observed that the interiorly presented wall **28** is designed so that the skirt **30** snugly engages the wall **28** upon entry into the socket **26**. Moreover, the wall **28** may be tapered inwardly so that the outer end thereof is diametrally reduced with respect to the open end of the head **24**. This tapered wall **28**, along with the section **74** of reduced thickness, facilitates entry of and removal of the skirt **30** into and from the socket **26**.

The device A of the present invention also includes a unique locking means comprised of an annular locking ring **76** projecting radially outwardly from the sleeve **30**. In a preferred form of construction, this ring **76** is integral with the sleeve **30** and is preferably located in the section **74** of reduced thickness. The interiorly presented side wall **28** is provided with an annular recess **78** which is sized and located to removably accommodate the annular locking ring **76** on the sleeve **30**. Inasmuch as the locking ring **78** is located in the section **74** of reduced thickness, it can be conveniently pulled from its locking position in recess **78** by merely grasping and pulling on the outer end of the lens **32**. In like manner, the ring can be inserted into its locked position, as illustrated in FIG. **5** of the drawings, by merely pushing on the end dome **70** of the lens **32**.

By further reference to FIG. **5**, it can be observed that the lens **32** may retentively hold the diode **29** in place within the socket **26**. The diode **29** may adopt many forms of construction, depending upon the particular manufacturer thereof. Nevertheless the devices of the present invention are capable of accommodating substantially any type of diode thus made. In this case, the diode **29** includes a bulb portion **80** having a diametrally enlarged inner end **82**. It can be observed that the enlarged inner end **82** may abut against an annular shoulder **84** formed within the socket, in the manner as illustrated in FIG. **5** of the drawings. However, this abutting position is not necessary inasmuch as the diode could be retentively held by means of its terminals in a manner to be hereinafter described.

FIG. **9** illustrates one form of construction of the lens **32** which may be provided with a series of axially extending circumferentially spaced slits **86**. In this case, three such slits are shown as indicated in FIG. **8**, although it should be recognized that any number of slits could be provided around the inner end of lens **32**. In this way, it is possible to eliminate the diametrally reduced section **74**, inasmuch as the slits **86** will permit diametral contraction and expansion of the inner end of the lens as it is being inserted into the socket **26**. Moreover, it can be observed that the lens **32** also includes the locking ring **76** as illustrated in FIG. **9** of the drawings. It should be further observed with respect to the lens **32** as illustrated in FIG. **9**, that the slits **86** terminate prior to the annular locking ring **76**.

FIGS. **7**, **8** and **10** further illustrate a modified form of locking mechanism which may be used to secure the lens within the enlarged head of the housing. In this case, the skirt **30** of the lens **32** is provided with a plurality of outwardly extending locking lugs **88**. Although, only three such lugs **88** have been illustrated, it should be understood that any number of lugs could be employed. Furthermore, these lugs are circumferentially spaced in axial alignment about the skirt **30**. These lugs **88** are preferably provided with oblique sidewalls **90**. FIG. **7** illustrates the employment of the lugs **88** in connection with the lens **32** having the section **74** of reduced thickness.

In like manner, the lugs **88** could also be used with that embodiment of the skirt employing the slits **86** in the manner as illustrated in FIGS. **8** and **10** of the drawings. In this later embodiment, it can be observed that the lugs **88** would be located within region of the slits **86**. Thus, the slits would extend into the wall of the skirt **30** at least to the position of the lugs **88**. In this respect, it should also be observed that since the lugs **88** are located toward the open end of the lens **32**, the lens **32** would have the skirt shorter in axial length than when the annular locking ring **78** is employed.

FIG. **11** illustrates a further form of locking mechanism which may be used to secure a lens within the housing of the present invention. In this case, the housing includes the enlarged head **90** which is provided at its lower end with an annular groove **92**. The groove **92** integrally merges into a back wall **94** formed within the housing. However, the other end of the groove **92** merges into an interior socket wall **96** through a tapered surface **98**. Preferably this tapered surface **98** is located at about a 45° angle with respect to the socket wall **96**.

The lens **100** which is used with this locking mechanism is composed of a dome **102** which integrally merges into an annular skirt **104**. The skirt **104**, in turn, merges into a section **106** of reduced thickness. Moreover, provided on the outer surface of the section **106** of the reduced thickness in close proximity to the inner or open end of the skirt **104** are a plurality of circumferentially spaced locking lugs **108**, similar to the lugs **88**. These lugs **108** also include integrally formed abutment shoulders **110** which engage the tapered surface **98**. However, it should be understood that the lugs could be replaced by a locking ring. However, in this case, the locking rings would not be cylindrical in shape, but include an abutment shoulder which is capable of engaging the tapered surface **98** of the groove **92**.

One of the unique aspects of the present invention resides in the fact that the resistor which is normally carried by a light emitting diode device and the diode itself can be removed as a unit in order to replace either the resistor or the diode. FIG. **5** illustrates the construction which enables this advantage. The body **12** of the housing **10** is provided with an enlarged chamber **112** which is capable of accommodating a resistor **114**. It can be observed that the housing also includes an arm **116** terminating in a flange **118** which engages the resistor **114** and thereby holds the resistor **114** against interior wall forming the chamber **112**. Moreover, the resistor **114** is provided with a conductive tab **120** which is engageable with a conductive terminal **122** on the diode **29**. In this way, the resistor **114** can be connected to the diode **29** through the tab **120** and the terminal **122**. This connection between the tab **120** and the terminal **122** is preferably a soldered connection. Thus, the diode **29** and the resistor **114** can be removed from their position in the housing **10** by merely removing the lens cap **32** and pulling the diode **29** and the resistor **114** outwardly through the socket **26**.

The conductive terminal **34** extends into the body **12**, in the manner as illustrated in FIG. **5**, and is integrally formed with a connecting clip **124**. Although not necessary, the terminal **34** and the clip **124** may be individual pieces and the terminal **34** may be soldered to the connecting clip **124** if desired. The opposite end of the connecting clip **124** receives a diode terminal **126** in somewhat of a snap-fitting engagement. In this way, the diode can merely be removed from the housing by pulling on the head of the diode so that the terminal **126** is merely pulled out of the clip **124**. The conductive terminal **36** is similarly integral with a connecting clip **128**. Again, the clip **128** and the terminal **36** may be individual pieces with the terminal soldered or otherwise secured to the connecting clip **128**. The connecting clip **128** is also capable of removably receiving a terminal

130 from the resistor 114. In like manner, the resistor 114 may be pulled outwardly through the socket 26 so that the terminal 130 is easily removed from the clip 128.

The clips 124 and 128 are preferably formed of a relatively thin metal which may be folded over in a form of a U-shaped clip. Moreover, due to the thin gauge of the metal, it is somewhat resilient so as to removably receive the various terminals 126 and 130.

By further reference to FIG. 5 of the drawings, it can be observed that the position of the clips 124 and 128 are offset from each other. Thus the clip 124 is located closer to the socket 26 than the clip 128. In this way it is impossible to reverse the terminals 126 and 130 since if the terminals were reversed they would not properly extend into the clips 124 and 128. More specifically, one of the clips is located sufficiently closer to the socket than the other clip that the terminal normally received by that other clip cannot be sufficiently longitudinally received by the one clip to allow reception of the remaining terminal by that other clip.

Each of the components described above are all mocular in their construction so that they are interchangeable. In this way, it is possible to generate a variety of diode devices with just a relatively few number of components. Consequently, the user of the diode devices achieves a much wider degree of versatility to fill all of the light emitting diode device needs. In this respect, it can be observed that any of the lenses 32 or 56 could be utilized in either of the housing in either of the devices A or B. Moreover, the lenses may be provided with the section of reduced thickness or the axially located slits, or any of the locking means described above.

The housing used in the diode devices may be formed of any of a number of materials including a wide variety of plastic materials. However, black nylon has been found to be one of the preferred materials of construction. In addition, the lenses also may be made of any of the variety of plastic materials, although cellulose acetate butyrate has been found to be a preferred material. With respect to the lens, the lens should be transparent to the radiation emitted by the diode 29. Various lens shapes and sizes and colors even moreso add to the versatility of the diode devices. The various clips 124 and 128 are preferably made of any metals which are relatively thin and tempered to have a spring type action. In this respect, phospher bronze has been found to be highly effective material. In like manner, the terminals or pins also preferably are constructed of phospher bronze and may be gold-plated.

Thus there has been illustrated and described various novel light emitting diode devices and components which can be used in a system for constructing diode devices and which can all be made at a relatively low cost and used in a variety of applications. Consequently, the diode devices and the components thereof fulfill all of the objects and advantages sought therefor. Many changes, modifications, variations and other uses and applications of the diode devices and the components thereof will become apparent to those skilled in the art after considering this specification on the accompanying drawings. Therefore, all such changes, modifications, variations and other uses and applications which do not depart from the spirit and scope of the invention are deemed to be covered by the invention which is limited only by the following claims.

Having thus described my invention, what I desire to claim and secure by letters patent is:

1. A light emitting diode device comprising an outer housing, said housing having a longitudinally elongated body and an enlarged head connected to said body, said head having an interiorly presented wall forming a socket therein, a lens having an outer section and an annular skirt section projecting from said outer section, said skirt section removably extending within said socket, recess means formed in said interiorly presented wall, and somewhat resilient projecting locking means on said skirt section sized and fitting within said recess means when said skirt section is introduced into said socket for removably retaining said lens on said outer housing, a light emitting diode received within said lens and extending radially inwardly of said recess means, the diode having a longitudinally elongated terminal and a relatively short terminal, both said terminals projecting within a hollow formed by said housing elongated body, a resistor positioned in said hollow by said body and in endwise alignment with said diode relatively short terminal, said resistor having a conductive tab and a terminal at longitudinally opposite ends thereof, said tab integrally connected to the diode relatively short terminal whereby the diode is positioned relative to the housing and lens by the resistor, there being electrically conductive clips in the housing removably longitudinally receiving and engaging the diode elongated terminal and the resistor terminal, whereby the diode and resistor may be longitudinally removed as a unit from the housing or returned as a unit into the housing via said socket after prior removal of the lens therefrom.

2. The light emitting diode device of claim 1 further characterized in that the resilient projecting locking means on said skirt section is an annular ring extending around the skirt section.

3. The light emitting diode device of cliam 1 further characterized in that one of said clips is located sufficiently closer to said socket than the other clip that the terminal normally received by said other clip cannot be sufficiently longitudinally received by said one clip to allow reception of the remaining terminal by said other clip.

4. The light emitting diode device of claim 1 further characterized in that said interiorly presented wall is tapered inwardly to produce a diametrally reduced inner end.

5. The light emitting diode device of claim 1 further characterized in that said skirt section is provided with at least one slit to permit diametral contraction and expansion thereof.

6. The light emitting diode device of claim 1 further characterized in that said skirt section is provided with a plurality of circumferentially spaced axially extending slits to permit diametral contraction and expansion of said skirt section.

7. A light emitting diode device as defined in claim 1 wherein said body has an arcuately shaped annular outer wall and a relatively flat wall section merging into said arcuately shaped annular wall.

8. The light emitting diode device of claim 7 further characterized in that said relatively flat wall section extends axially along the body for the full axial length of the body.

9. The light emitting diode device of claim 7 further characterized in that the body has a transversely ex-

tending back wall extending across said body, a first conductive terminal extending from said back wall, and an arm extending from said arcuately shaped annular wall.

10. The light emitting diode device of claim **9** further characterized in that said arm is defined by a clip wrapped about a portion of said arcuately shaped annular wall.

11. The light emitting diode device of claim **1** further characterized in that said body has a back wall and an arm extending from said back wall to engage and hold said resistor against another interior wall of the body.

12. A light emitting diode device as defined in claim **1** including a back wall on said body, first and second conductive terminals extending through said back wall, said conductive terminals respectively connected to said clips, a first embossment on said back wall in the shape of a conductive terminal designation and being located in proximity to said first conductive terminal, and a second embossment on said back wall in the shape of another conductive terminal designation and being located in proximity to said second conductive terminal.

13. The light emitting diode device of claim **12** further characterized in that said first and second embossments are integrally formed on said back wall.

14. The light emitting diode device of claim **12** further characterized in that the first embossment has the shape of a "+" and the second embossment has the shape of a "−" sign, and that said back wall is provided with a third embossment means in the form of information bearing indicia and being spaced from said first and second embossments.

15. A light emitting diode device comprising an outer housing, said housing having a longitudinally elongated body and an enlarged head connected to said body, said head having an interiorly presented wall forming a socket therein, a lens having an outer section and an annular skirt section projecting from said outer section, said skirt section removably extending within said socket, recess means formed in said interiorly presented wall, and somewhat resilient projecting locking means on said skirt section sized and fitting within said recess means when said skirt section is introduced into said socket for removable retaining said lens on said outer housing, a light emitting diode received within said lens and extending radially inwardly of said recess means, there being longitudinally elongated terminals of different lengths connected with the diode, there also being electrically conductive clips in the housing removably longitudinally receiving and engaging said terminals, one of said clips being located sufficiently closer to said socket than the other clip that the terminal normally received by said other clip cannot be sufficiently longitudinally received by said one clip to allow reception of the remaining terminal by said other clip.

16. The diode device of claim **15** wherein said body includes a back wall at the end thereof opposite the head and first and second conductive terminals extending through said back wall and connected with said clips, there being embossment structure projecting from the back wall at the outer side thereof and located in proximity to said terminals.

17. The device of claim **16** wherein the embossment structure includes first and second embossments respectively having the shape of + and − signs.

* * * * *