United States Patent [19]

Lawlor et al.

[11] **3,870,315**

[45] **Mar. 11, 1975**

[54] **GOLF SWING TRAINING DEVICE**

[76] Inventors: **Robert E. Lawlor,** 19341 Weymouth Ln., Huntington Beach, Calif. 92646; **Carlton B. Watson, Jr.,** 23 Richlee Dr., Camillus, N.Y. 13031; **Michael E. McGill,** 8245 Graham Green, Buena Park, Calif. 90620

[22] Filed: **May 21, 1973**

[21] Appl. No.: **362,278**

[52] **U.S. Cl.** ..... **273/186 R,** 273/186 C, 273/200 R

[51] **Int. Cl.** **A63b 69/36**

[58] **Field of Search** 273/186, 187, 191, 192, 273/200

[56] **References Cited**

UNITED STATES PATENTS

3,166,326	1/1965	Mundy	273/186 C
3,194,565	7/1965	Schroer	273/186 R
3,246,898	4/1966	Shoaf	273/186 C
3,482,838	12/1969	Gibson et al.	273/186 C

Primary Examiner—George J. Marlo

[57] **ABSTRACT**

A device to generate a "feel" for a proper golf swing and to force extension of the swing down the line of flight of the ball. It provides a pair of sensors embracing a proper swing path in spaced relation thereto such that one or the other of the sensors will be struck by the club in a bad swing, thus providing a feel of a bad swing. The sensors are moderately yieldable under club impact and are adjustable for straight, fade, pitch and punch, and draw shots; and also are adjustable to the immediate ability of the golfer, thus providing a new setting as the golfer's swing improves, using a step by step procedure. Each sensor embodies a shank which is rotatably mounted to a base by means of a split sleeve having a frictional grip thereon, for adjustment and holding in adjusted position, and a tusk bent at an obtuse angle from the free end of the shank for adjustment in a conical path around the sleeve axis, which is inclined upwardly at an acute angle such that the tusk may be adjusted both for height and laterally. A laterally adjustable rear extension feeler is provided at the back end of the device. A backswing indicator is provided in the form of an upstanding flexible finger-like feeler mounted for lateral adjustment on the rear end of the base.

6 Claims, 13 Drawing Figures

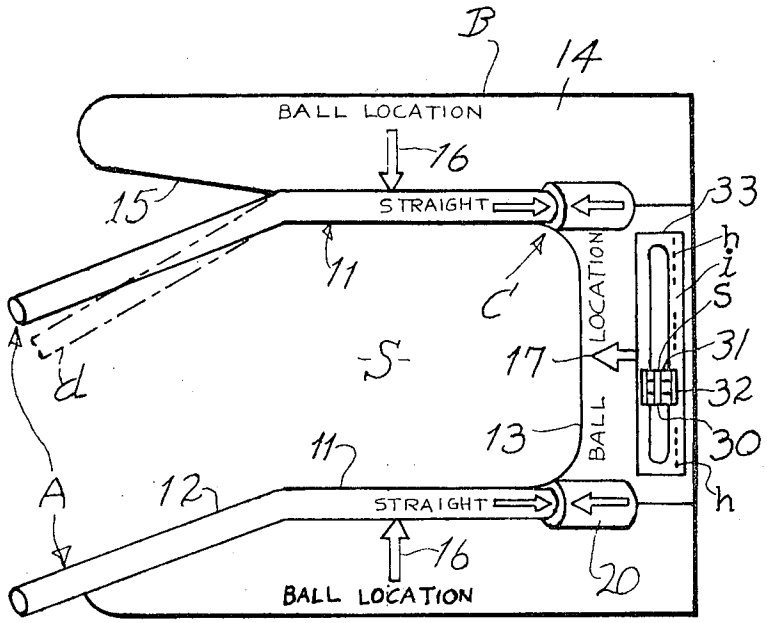

Fig. 9

PITCH & PUNCH

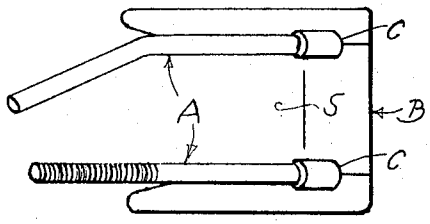

Fig. 10

DRAW

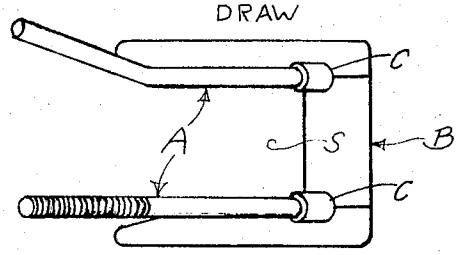

Fig. 8

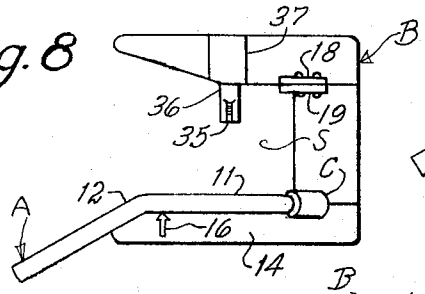

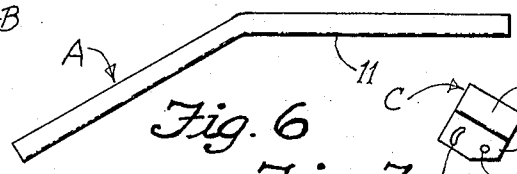

Fig. 6

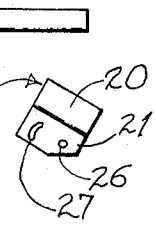

Fig. 7

Fig. 1

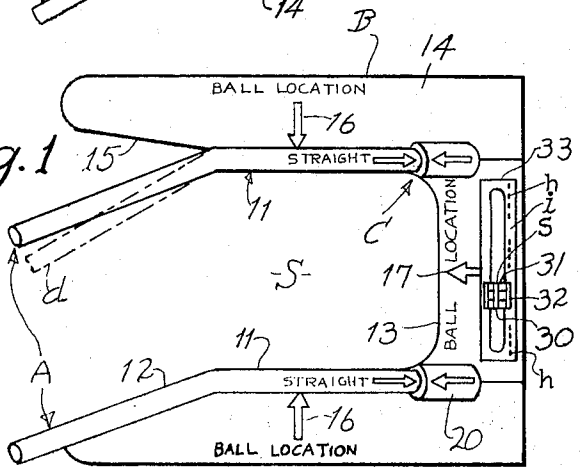

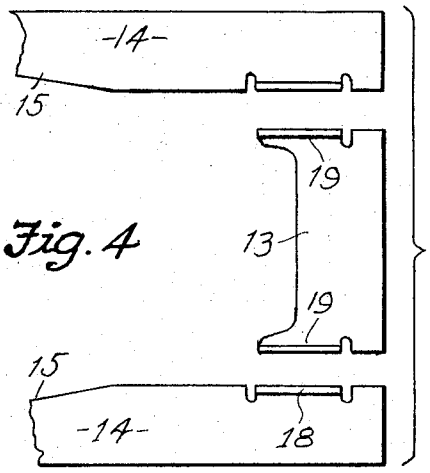

Fig. 4

Fig. 11

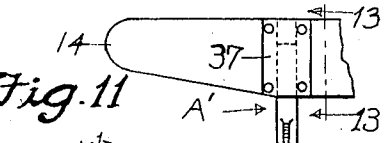

Fig. 12

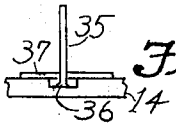

Fig. 5

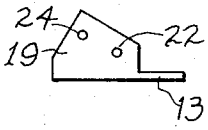

Fig. 13

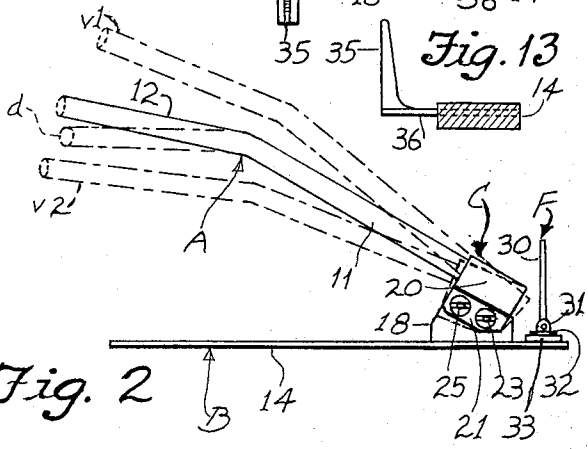

Fig. 2

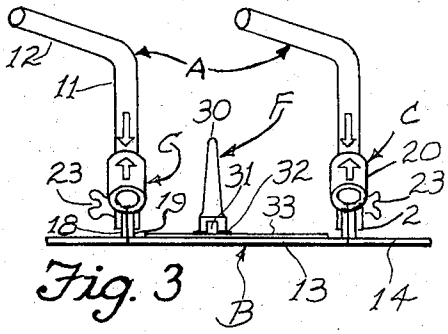

Fig. 3

GOLF SWING TRAINING DEVICE

BACKGROUND OF THE INVENTION

A golf swing training device embodying a pair of stationary guide rails mounted on a base in fixed positions such as to define between them a correct path for a golf swing, is disclosed in a prior U.S. Pat. The device makes no provision for adjustability for various types of swing, nor for yieldability of the guide rails to avoid club damage from impact with a rail. Nor does the device make any provision for the left-handed golfer, nor the immediate ability of the golfer, nor the height of the golfer (e.g., women and children).

SUMMARY OF THE INVENTION

The present invention provides a training device (1) which is completely adjustable to the individual, whether tall, short, right-handed or left-handed; (2) which will first untrain him and then retrain him by enabling him to feel a bad shot and to gradually acquire the feel of a good shot; and which will constrain him to swing with proper extension down the line of flight, by (a) changing the point of concentration of his eyes from the ball to a point between the sensor tusks so as to eliminate attack at the ball and allow him to simply let the ball get in the way of the club head in its arc of swing; (b) making it necessary to execute a low, extended backswing in order to swing properly through the space between the sensors; (c) constraining him to push back and pull down with the entire left side in control, eliminating the cast or throw with the right hand which dissipates power and control; (d) constraining him to delay uncocking of the wrists, promoting good timing, creating power, and eliminating any spinning of the hips and shoulders to allow extension down the line of flight; (e) eliminating the shank by forcing the swing down, through and up, not allowing the club shaft to get parallel to the ground at too early a point in the golfer's swing.

The general object of the invention is to accomplish the foregoing in an apparatus of relatively simple, inexpensive yet durable construction. Another object is to provide such a device which will avoid damage to the club used therewith and which will not cause injury to the golfer. Other objects are to provide such a training apparatus which can be adjusted for use by either a left-handed or a right-handed player; and one which can be adjusted for use by both tall and short golfers.

Other objects will become apparent in the ensuing description and appended drawings, in which:

FIG. **1** is a plan view of a training device embodying the invention, adjusted for a straight shot;

FIG. **2** is a front side view thereof;

FIG. **3** is a rightward end view of the same;

FIG. **4** is an exploded plan view of the three sections of the base;

FIG. **5** is a front sided elevational view of one of the sensor-mounting brackets;

FIG. **6** is a plan view of one of the sensors;

FIG. **7** is a front side view of one of the sensor-mounting sleeves;

FIG. **8** is plan view of a modified form of the device;

FIG. **9** is a schematic plan view of the device as adjusted for a pitch and punch shot;

FIG. **10** is a schematic plan view of the device as adjusted for a draw shot;

FIG. **11** is a plan view of a portion of the modified form of FIG. **8**;

FIG. **12** is a front elevational view of the same; and

FIG. **13** is a cross-sectional view of the same, taken on line **13—13** of FIG. **11**.

DESCRIPTION

Referring now to the drawings in detail, I have shown therein in FIGS. **1–10** thereof, as one form in which the invention may be embodied, a golf swing training device, comprising, in general, a pair of Sensors A mounted on a Base B by means of respective Sleeves C and brackets integral with base B such as to provide for rotary adjustment of the sensors in the sleeves, and vertically tilting adjustment of the sleeves relative to the brackets.

Each of the sensors A is formed of a length of tubing of moderate flexibility, such as polyvinyl chloride tubing, with an obtuse bend to provide a shank **11** at one end and a tusk **12** at the other end, an angle of aproximately 150° being subtended between the shank and tusk (FIG. **6**).

Base B is fabricated in three sections, namely a central bridge section **13** and a pair of feet **14** attached to respective sides of bridge section **13** and thus spaced apart laterally a distance corresponding to the breadth of the bridge section **13.** Feet **14** are inwardly tapered at **15** at their forward ends so as to provide a forward flare in the open end of a "cutout" space S defined between their inner margins, in which the club head may intersect the ground surface instead of striking against the base. Provided on the upper faces of the three base sections, as by means of decals, are three arrows all pointing at a common center to locate ball placement. Arrows **16** on the respective feet **14** are aligned on a common transverse axis, and arrow **17,** on base section **13,** is aligned with a median longitudinal axis of the cutout space **15.** The legend "ball location" is displayed in conjunction with each of the arrows **16** and **17,** as shown. Feet **14** are provided, along their inner margins near their rear ends, with upwardly bent bracket ears **18,** and bridge section **13,** at its respective sides, is provided with corresponding bracket ears **19** shown in elevation in FIG. **5.** Ears **18** and **19,** of conforming elevational contour, are adapted to be secured together in face-to-face contact by respective sleeves C, as will now be described.

Each sleeve C comprises a split cylindrical body **20** having integral flanges **21** projecting from its split margins in spaced parallel relation such as to snugly receive and embrace the respective pair of bracket ears **18, 19.** Ears **18, 19** are perforated to provide aligned bolt holes **22** to receive pivot bolts **23,** and aligned bolt holes **24** to receive clamping bolts **25.** Flanges **21** are provided with matching bolt holes **26** for pivot bolts **23,** and arcuate slots **27** (FIG. **6**) alignable with bolt holes **24** to provide for a range of height adjustments as indicated by the phantom lines in FIG. **2.** Bolts **23** and **25** are equipped with wing nuts as indicated, for drawing the flanges **21** into tight clamping engagement with bracket ears **18, 19** to secure the sleeves C in any selected positions of height adjustment, as well as to securely attach the base sections **13** and **14** together to provide a rigid base.

Sensor shanks **11,** at their free ends, are mounted in sleeves C for rotatable adjustment to selected positions in which they will be held by frictional grip of sleeves

C which is established when bolts **23** and **25** are tightened to effect adequate clamping action on flanges **21.** Such frictional grip, however, is sufficiently moderate in its holding action so that a sensor may yield rotatably if struck a sharp blow by a golf club. Such holding grip may be loosened by backing off the wing nuts of bolts **25,** and a sensor may then be adjusted to a selected one of the several positions shown in FIGS. **1, 8, 9** and **10** respectively, for straight shot, fade shot, draw shot and pitch-punch shot swinging respectively, as indicated by legends in those figures. Such legends are preferably applied to the sensor shanks or to the shank of the sensor remote from the position of the golfer's stance (the sensor appearing at the upper side of each plan view, in the case of a right-handed golfer). For the straight shot position, the word "straight" appears on the shanks of both sensors, along with arrows for alignment with arrows printed on the upper sides of sleeves C, for exact positioning. For the other sensor positions, the legends "fade," "draw," and "pitch-punch" will be located on the shanks at positions suitably spaced circumferentially from the legends straight of the normal position, and corresponding alignment arrows are provided adjacent the respective legends so that the various positions may be located without guesswork.

The straight shot position of tusks **12** is shown in full lines in FIGS. **1** and **2,** with vertically adjusted variations thereof (e.g., adjusted for variations in height of different golfers) shown in phantom at *v***1** and *v***2.** Rotatably adjusted positions of the sensors for a fade shot are shown in phantom, at *d*, in FIGS. **1** and **2.** In adjusting from the straight to the fade position, the tusks **12** are rotated downwardly and toward the golfer in his stance position before the device. In adjusting from the straight shot position to the draw shot position, the tusks **12** are rotated away from the golfer and upwardly.

The several arrangements of sensor positions shown in FIGS. **1** and **8–10** are for a right-handed swing. For a left-handed golfer, the sensors would be rotatably adjusted so as to reverse these arrangements with reference to the two sides of the device (upper and lower as viewed in these plan views). For example, the tusks **12** of FIG. **1** would be seen as being angled toward the upper side of FIG. **1** in the adjustment for a left-handed swing, and In FIGS. **9** and **10** the upper sensors would appear to be straight as viewed from above and the lower sensors would be angled laterally with their tusks **12** converging toward and diverging from the major axis of the device, respectively.

An adjustable rear extension feeler F is provided at the rear end of base B, and is adjustable laterally for the particular shot selected by the golfer. Feeler F functions to assure the golfer that he is executing his backswing properly and is not forcing or over-correcting his downswing. Feeler F comprises a finger **30** of tough plastic material connected by means of a hinge **31** to a slider **32** which is slidably mounted on a transversely extending rail **33** affixed to base bridge section **13.** Rail **33** bears an indicator scale extending along its length and consisting of right and left areas (for right and left-handed swings respectively) each subdivided into an outer area h designated by a legend "hook," an intermediate area *i* (in the path of a proper swing) and an inner area designated by a legend s reading "slice." If a golfer is having trouble with a slice, he may erect the feeler F and slide it laterally to the slice area at *s*. for his type of swing (right-handed or left-handed as the case may be) and attempt to avoid striking it on his backswing. If he does strike it, he will know that his slice is continuing to give him trouble. If he does not, he will know that the club head is taking a proper path over the intermediate area *i* of the respective end of scale **34** (or into a hook). Upon being struck on its hinge **31** (which, like rail **33,** extends transversely of the major axis of the device) and will then lie flat, below the path of the return swing.

MODIFIED FORM

Instead of two sensors A of the type shown in FIGS. **1–10,** the invention, in the modified form shown in FIGS. **8** and **11–13,** may employ only one of the tusktype sensors A, on one side thereof (the side nearest the golfer's stance position) and on the remote side may utilize a limiting sensor A′ comprising a vertical sensing finger **35** projecting upwardly from a slide bar **36** which is extensibly mounted in a slideway **37** on the base foot **14** remote from the golfer's stance position. Finger **35** is of tough, flexible plastic material adapted to yield under a blow from the golfer's club, and then to return to its normal upstanding position. For a right-handed golfer, the sensor A′ is mounted on the upper foot as seen in the plan views of the drawing, and the tusk-type sensor A is located the same as the one seen at the lower side of FIG. **1.** For a left-handed golfer the positions of the sensors A and A′ would be reversed. In each case, the tusk-type sensor would be located at the side adjacent the golfer's stance position and the sensor A′ would be located at the remote side.

Operation

Preparatory to using the device for swing practice, the golfer has adjusted the sensors (FIGS. **1–10**) to appropriate height positions for his own size, and to the rotably adjusted positions for the type of shot he wishes to make (straight, draw, etc.). With the device so adjusted, a golf ball is placed on the ground in the cutaway space S in the position pointed out by the arrows **16** and **17.** The golfer then takes a stance at the proper stance position with his feet and body in proper positions with reference to the ball (and therefore properly located with reference to the training device). He will then swing the club in the space defined between the two sensors, attempting to avoid contact with either. The forward or inner sensor (nearest to him) defines generally the path of swing to be followed. The outer (remote) sensor limits the distance the club can be forced outside the line of flight. Its position of adjustment depends on the specific shot to be practiced. Contact with either sensor will be related to the swing just performed, to impart thereto the feel of a bad shot. Contact with the near sensor will tell the golfer that he is pulling the club too far to the left (thus failing to extend along the line of flight). It also might indicate that he is throwing the club at the bottom of his swing with his right hand; or taking the club back inside; or blocking his hip movement; or moving his head and body past the ball. Contact with the outer (remote) sensor will tell the golfer that he is swinging outside the line of flight and hence diverging from it on the far side (again not extending along the line of flight). Such contact might indicate that he is doing any of the following: throwing the club from the top with his right hand; or taking the club back inside; or rotating his shoulders on

too horizontal a plane; or not taking the club back in one piece; or spinning his hips. By taking another swing in which he attempts to adjust to a swing path between these two extremes, he will gradually achieve a proper swing path associated with a feel of correct swing derived from the unimpeded swing through without feeing any contact with a sensor. In this way the golfer can teach himself without attention to the rules of swing and without attempting to diverge from his own personal style of swing except for the corrective action of practicing with the training device. Such a course of self-training will preferably be carried out in three stages, namely:

1. Without using a golf ball, he will swing through the device, untraining any bad aspects of his swing and eliminating any attack at the ball

2. He will then learn to swing at an object such as a tee or whiffle ball placed at the ball-locating position, while continuing to swing through the device.

3. In the last stage he is ready to hit a golf ball properly positioned in space S, continuing to swing through the training device and grooving his swing so that he can finally execute it the same without the training device, as when he was using it.

The device of my invention eliminates the need for all gimmick and technique corrections and concentrates on the feel of a good golf swing.

Fabrication of the base in three sections and the use of the sleeves C for the dual function of disassembling the base and removal of the sensors from their connection therewith (and the corresponding inverse assembly operation) makes it possible to produce the unit inexpensively; facilitates handling in knock-down form, both for the manufacturer and shipper and also for the golfer; and reduces to a minimum the operations and time involved in assembling and adjusting the parts of the device.

I claim:

1. A golf swing training device comprising:

a base embodying

a pair of feet sections

and a bridge section extending between and detachably secured to corresponding ends of said feet sections to provide a base of U-configuration defining between said feet a space open at its end remote from said bridge, in which a golf club head may contact the ground on which said base is supported;

and a pair of sensors detachably secured to said base, at least one of said sensors being attached near the area of attachment of a respective foot to said bridge section;

said one sensor being a bar having an obtuse-angle bend intermediate its ends to provide a shank which is attached to the base, and a tusk extending obliquely from the free end of said shank, said shank extending generally parallel to the major axis of the base, and said tusk diverging from said axis;

the other sensor comprising a slide bar extensibly mounted to the other foot on a transverse axis, and a flexible finger extending upwardly from the free end of said slide bar.

2. A golf swing training device comprising:

a base embodying

a pair of feet sections

and a bridge section extending between and detachably secured to corresponding ends of said feet sections to provide a base of U-configuration defining between said feet a space open at its end remote from said bridge, in which a golf club head may contact the ground on which said base is supported;

and a pair of sensors detachably secured to said base near the areas of attachment of the respective foot sections to said bridge section;

said sensors being bars having respective obtuse-angle bends intermediate their ends whereby each sensor comprises a shank which is attached to the base and projects forwardly generally parallel to a respective foot, and a tusk extending obliquely from the free end of its respective shank in a laterally oblique direction in a setting for a straight shot;

and connector means functioning both to attach said base sections to one another and to attach said sensors to said base;

said connector means comprising respective clamps each having a pair of spaced parallel flanges for embracing engagement with ears bent upwardly from adjoining margins of said feet and bridge sections respectively, and clamp bolts extending through said flanges and ears and adapted to be tightened to secure said base sections to one another and to said sensors.

3. A device as defined in claim **2**, wherein said clamps further include cylindrical sleeves in which the ends of the shank portions of said sensors are mounted for rotatable adjustment; said sensors having at their opposite ends said obliquely extending tusks for adjustment laterally and vertically with reference to the base upon rotation of said shank portions in said sleeves.

4. A device as defined in claim **3**, wherein said shank portions are frictionally gripped in said sleeves and said clamp bolts are operable to adjust the frictional grip.

5. A device as defined in claim **1**, wherein said sensors are adjustable for both right and left-handed golfers.

6. A golf swing training device comprising:

a base embodying

a pair of feet sections and a bridge section extending between and detachably secured to corresponding ends of said feet sections to provide a base of U-configuration defining between said feet a space open at its end remote from said bridge, in which a golf club head may contact the ground on which said base is supported;

and a pair of sensors detachably secured to said base, at least one of said sensors being attached near the area of attachment of a respective foot to said bridge section;

said one sensor being a bar having an obtuse-angle bend intermediate its ends to provide a shank which is attached to the base, and a tusk extending obliquely from the free end of said shank, said shank extending generally parallel to the major axis of the base, and said tusk diverging from said axis;

and connector means attaching said base sections to one another, at least one of said connector means also functioning to mount said one sensor bar to the base and providing for adjustment of elevational tilt thereof and for rotary adjustment thereof to vary the direction of oblique extension of said tusk.

* * * * *