United States Patent [19]

Drelicharz

[11] **3,868,139**

[45] **Feb. 25, 1975**

[54] **CONTAINER HANDLING SPREADER BAR**

[75] Inventor: **Joseph A. Drelicharz,** Oxnard, Calif.

[73] Assignee: **The United States of America as represented by the Secretary of the Navy,** Washington, D.C.

[22] Filed: **Feb. 28, 1974**

[21] Appl. No.: **446,855**

[52] **U.S. Cl.** ..... **294/81 SF,** 294/67 R, 294/67 BB

[51] **Int. Cl.** **B66c 1/66**

[58] **Field of Search** ..... 294/67 R, 67 B, 67 BB, 294/67 DA, 81 R, 81 SF, 67 D; 214/620, 621

[56] **References Cited**

UNITED STATES PATENTS

2,670,983	3/1954	Breslav	294/67 BB
3,151,904	10/1964	Tantlinger et al.	294/81 SF X
3,536,350	10/1970	Backteman	294/67 R
3,688,933	9/1972	Rumell	294/67 D X

Primary Examiner—Evon C. Blunk
Assistant Examiner—Johnny D. Cherry
Attorney, Agent, or Firm—Richard S. Sciascia; Joseph M. St. Amand; David O'Reilly

[57] **ABSTRACT**

A self-activating container handling spreader bar comprised of a rectangular-shaped frame with retractable loading centering arms extending from adjacent frame sides and with retractable load supporting dogs located conveniently on the frame. Contact switches activate the retractable arms when the spreader bar is placed on a container. Retraction of the arms draws the spreader bar into alignment with the top of the container and also energizes a circuit which locks the dogs and spreader bar on top of the container.

8 Claims, 3 Drawing Figures

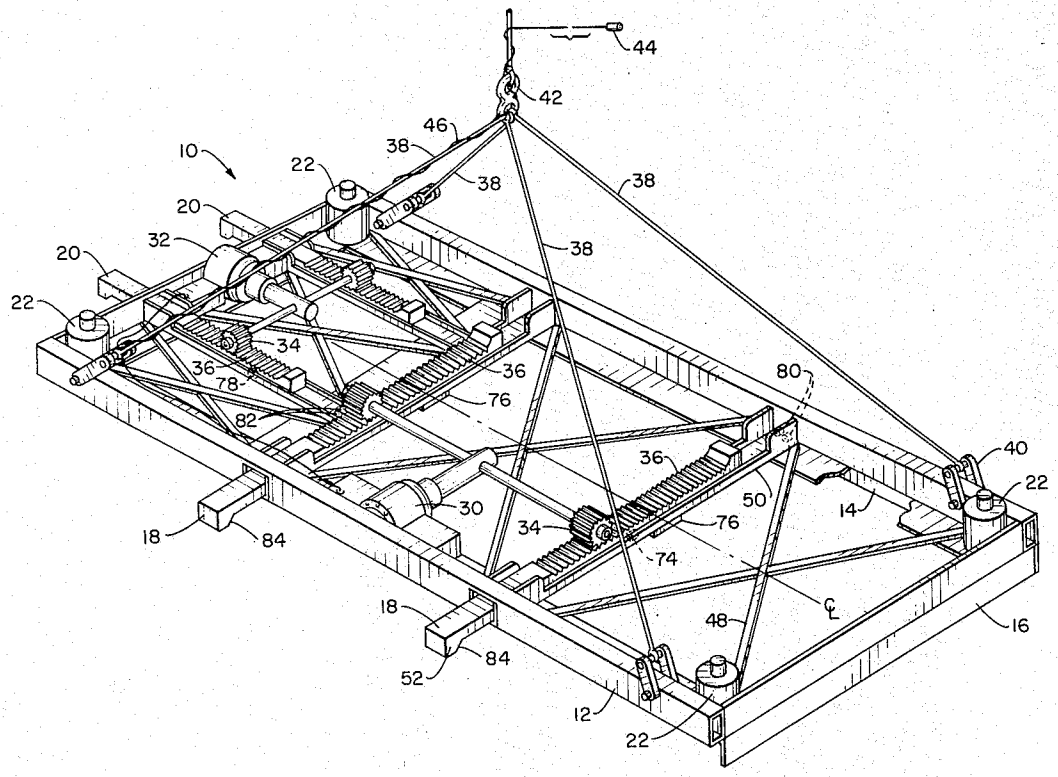

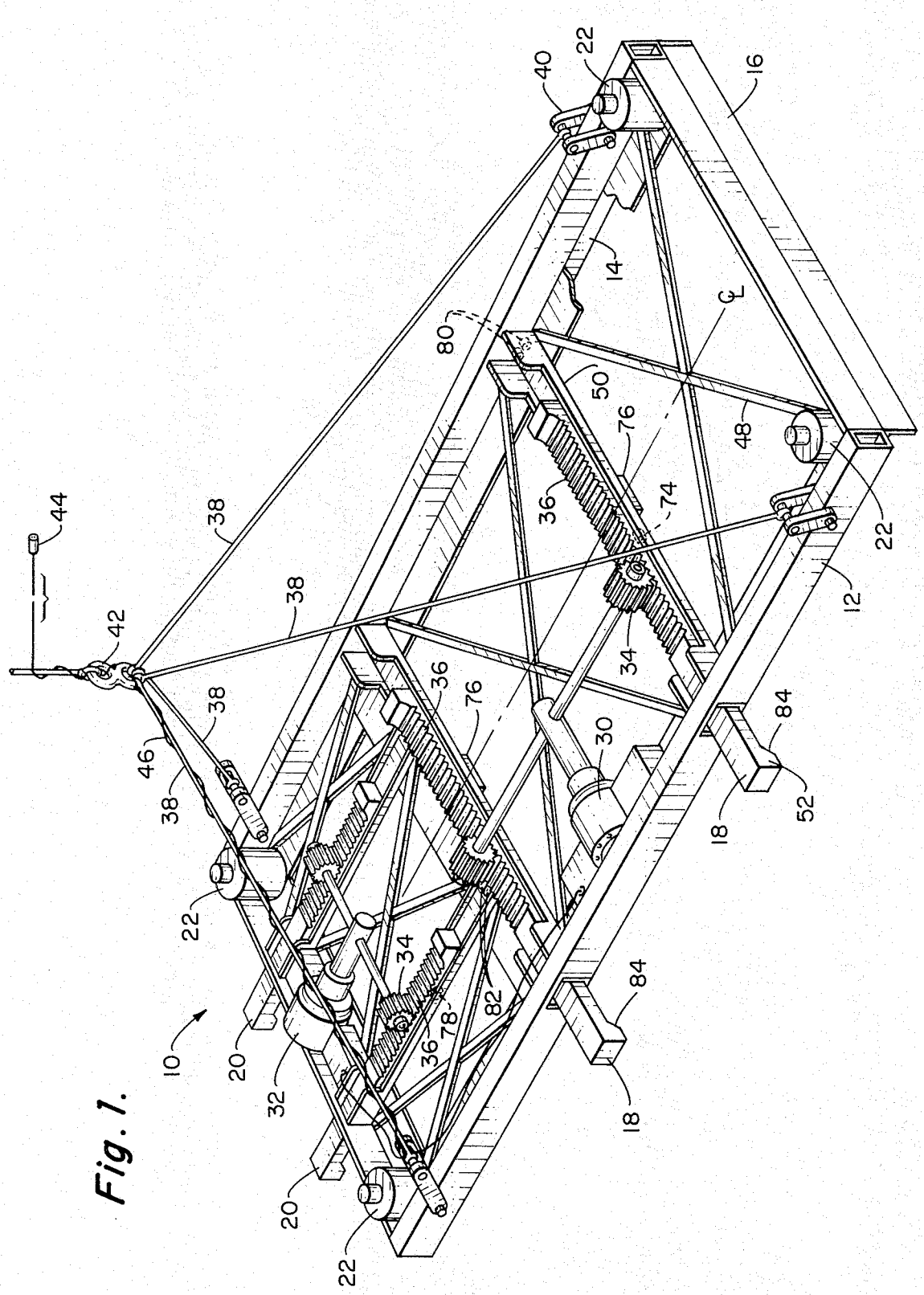
10
12
14
16
18
20
22
30
32
34
36
38
40
42
44
46
48
50
52
74
76
78
80
82
84
℄

Fig. 1.

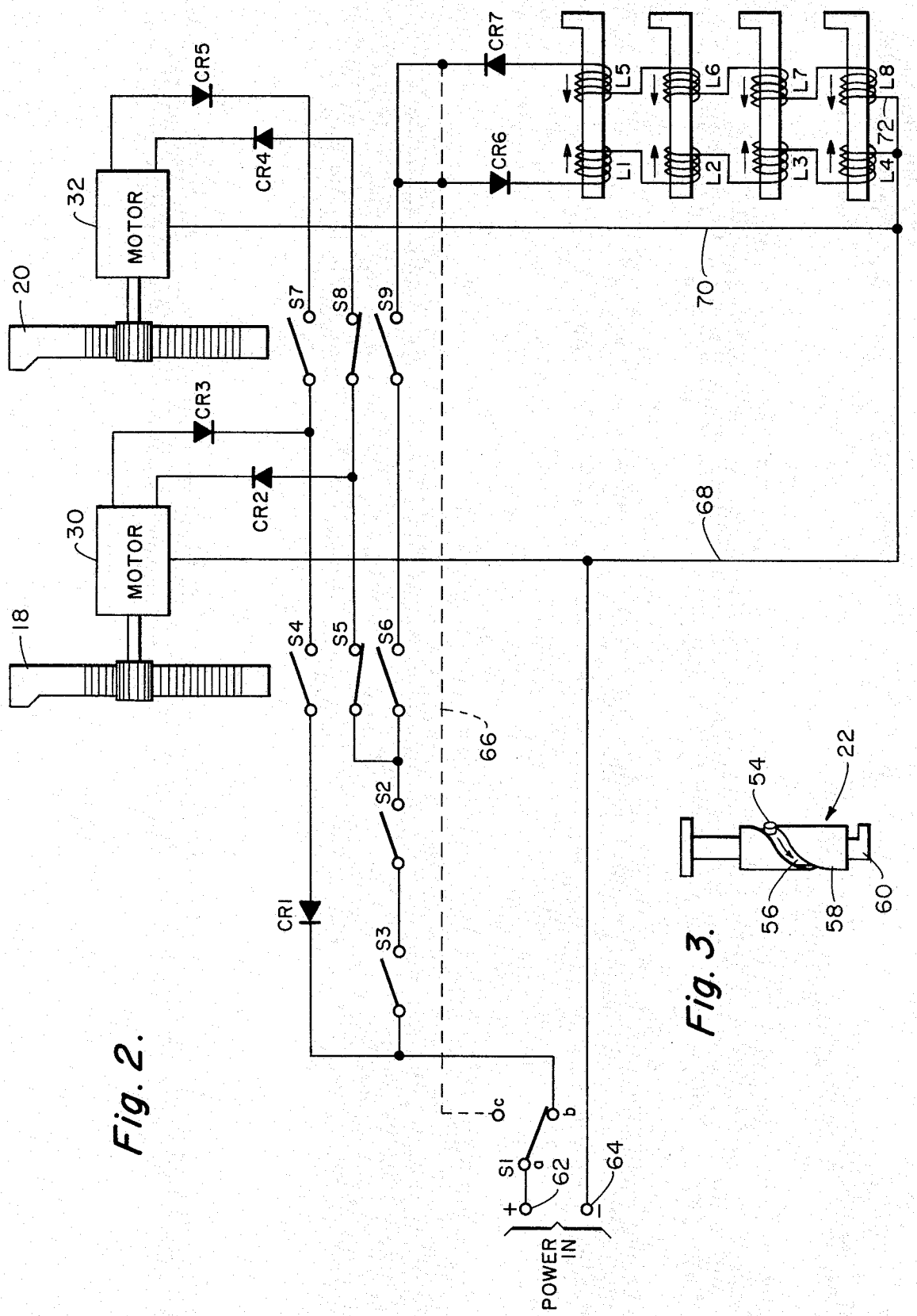
CR5
CR4
CR7
CR6
32
MOTOR
20
S7
S8
S9
CR3
CR2
30
MOTOR
18
S4
S5
S6
S2
S3
CR1
L5
L6
L7
L8
L1
L2
L3
L4
72
70
68
66
S1
a
b
c
62
64
+
−
POWER IN
54
22
56
58
60

Fig. 2.

Fig. 3.

CONTAINER HANDLING SPREADER BAR

BACKGROUND OF THE INVENTION

Container handling and securing devices such as spreader bars have a long history in the art. The basic function of a spreader bar is to change the direction and distribution of forces needed to handle a load. The simplest example of such a device is a board forced between two ropes used to lift or support a load. In container handling devices, the simplest arrangement is comprised of a pipe bar lifted at the center or ends with four lines or straps manually hooked into bottom corner fittings to form a sling.

They can also be very complicated, such as an electro-hydraulic spreader available on the market which handles 20 to 40 foot containers. This device grips the container automatically, turns and tilts it, if necessary, and balances any eccentric load. Swinging of the load is checked by means of an electro-hydraulic suppressor system. Another complicated system known as the Clyde crane 30-ton extensible automatic spreader beam has telescoping motion, retractable corner guides and operation of latching mechanisms, all electrically operated. Typically these retractable corner guides move longitudinally along the spreader's axis and are designed to lift 20 to 40 foot containers. These are basically a flared angle iron extending below the spreaders used to remove small alignment errors and can only be used on free-standing containers. One frequent problem with these devices is that of punching holes into container tops because, even though the latch mechanisms are electrically or hydraulically operated, they do not retract. Also, all spreader bars capable of handling a wide range of container sizes are, by their nature, complicated and heavy pieces of equipment. Another disadvantage is the relatively small margin of alignment error for such bulky equipment.

SUMMARY OF THE INVENTION

The purpose of this invention is to provide a self-activated spreader bar which eliminates the problems of punching holes in containers, precision alignment, and manual operation and is particularly adapted for use by helicopters. The spreader bar is comprised of a rectangular frame having arms extendable from adjacent sides and a skirt on the opposite sides. When positioned on a container, contact switches energize the arms retracting them until the arms draw the spreader bar into alignment with the top of a container. When the arms become fully retracted, they energize a contact switch which in turn activates dogs, which lock onto receptacles in the container. The two contact switches underneath the spreader bar are connnected in series and are spaced apart such that the spreader bar must be substantially on the container in order for the retractable arms to be activated. These contact switches permit operation in blindness or under a hovering helicopter where precision placement is only accomplished by luck. The spreader bar allows a placement error on a container as much as half the width of the spreader.

OBJECTS OF THE INVENTION

One object of the present invention is to provide a container handling spreader bar which eliminates the need for precision placement on a container.

Another object of the present invention is to provide a container handling spreader bar which eliminates the problems of punching holes in containers.

Still another object of the present invention is to provide a container spreader bar which is self-activated when positioned on a container.

Yet another object of the present invention is to provide a container spreader bar which automatically locks onto a container when the bar is in alignment with the top of the container.

Other objects, advantages and novel features of the invention will become apparent from the following detailed description of the invention when considered in conjunction with the accompanying drawings.

BRIEF DESCRIPTION OF THE DRAWINGS

FIG. **1** is a perspective view of the self-activated container handling spreader bar.

FIG. **2** is a schematic diagram of the electrical circuit for operating the container handling spreader bar.

FIG. **3** is a view of one of the self-locking dogs illustrating the manner in which they are kept retracted during placement of the container handling spreader bar.

DETAILED DESCRIPTION OF THE PREFERRED EMBODIMENT

The container handling spreader bar, generally indicated at **10,** is shown in FIG. **1** and is comprised of a rectangular frame **12,** skirts **14** and **16,** extending downward and attached to one side and the adjacent end of the rectangular frame **12,** load centering retractable arms **18** and **20,** and self-locking dogs **22.** Motors **30** and **32** drive the retractable arms through gears **34,** engaging a rack **36** on top of each pair of retractable arms **18** and **20.** The spreader bar **10** is lifted by cables **38** on swiveling U-bolts **40** attached adjacent to each corner of the rectangular frame **12.** The cables **38** are all joined together by a swivel joint **42** or other suitable device for lifting. The length of the cables **38** are adjusted to balance the spreader bar in order to keep it substantially level. A D.C. power supply located at some remote site (e.g., a helicopter) transmits power to the spreader bar via connector **44** and auxiliary cable **46.**

The rectangular frame **12** is formed from box beams or channel irons which are welded or bolted together at their ends. Since these spreader bars are typically extremely large, sometimes 8 feet wide by 20 feet long, and even larger, the materials selected should be rugged with an effort made to minimize weight. Rods **48,** welded or bolted diagonally across each corner of the rectangular frame **12** provide additional rigidity, if desired. Skirts **14** and **16** are fastened to one side and the adjacent end of the rectangular frame **12** to guide the spreader bar **10** into alignment with the top of a container. These fixed skirts **14** and **16** do not extend beyond the edges of the frame **12** to allow for operation in ship cells, which have guide rails at each corner of the cell to align and secure the containers.

The retractable arms **18** and **20** are slidably mounted in a grooved support **50** which can be constructed from channel iron fastened to the rectangular frame **12.** The retractable arms **18** and **20** are mounted so that there are no downward projections beneath the rectangular frame **12.** That is, they are mounted so that they are entirely within the boundaries of the spreader bar **10** dur-

ing retraction. The retractable arms **18** and **20** are approximately equally spaced along the side and end, and have hook-like downward projections **52** on the end of each arm, which are adapted to catch the top edge of a container to draw the spreader bar into alignment. While one arm could work for drawing the spreader bar into alignment with a container, two parallel, spaced apart arms are more suitable because they will automatically correct for any angular displacement of the spreader bar when placed on top of a container. The retractable arms **18** and **20** are provided with gear racks **36** on their upper surface, which can be an attachment or formed integrally with the arms.

Electric motors **30** and **32** operate gears **34** which engage the gear racks **36** on the retractable arms **18** and **20.** The electric motors **30** and **32** are suitably supported so that they do not extend below the rectangular frame **12.**

Self-locking dogs **22** are fastened at the inside corners of the rectangular frame **12** so that they will be aligned with receptacles in a container when the spreader bar **10** is drawn into the proper position. These self-locking dogs **22** are held in the retracted position during the placement of the spreader bar, either electrically or mechanically, as shown in FIG. **3.** FIG. **3** shows a somewhat schematic diagram of a typical dog assembly in which a pin **54** rides in a spiraling rail **56** in the dog housing **58.** The pin **54** is rigidly attached to the locking stud **60,** causing it to rotate into a locking position as it drops or is forced downward into a receptacle. When the locking stud **60** is in the retracted position, the pin **54** is retained at the top of the rail **56** by a notch, latch or some other suitable means, such as a slight downward curvature of the rail **56.**

The electrical circuit for operating the container handling spreader bar **10** is shown schematically in FIG. **2.** Power is supplied to the spreader bar **10** through a connector **44,** schematically illustrated in FIG. **2** as terminals **62** and **64.** Switch **S1,** which may be remotely located in a helicopter or other device for operating the spreader bar, applies the input power to the circuit. When switch S1 contacts terminal *b*, the spreader bar is ready for automatic operation.

Normally open contact switches **S2** and **S3** are connected in series so that both must be closed in order for retraction of arms **18** and **20** to begin. They are physically separated on a centerline of the spreader bar to assure an approximately aligned condition before the electrical circuit is energized. When contact switches **S2** and **S3** are both closed, power is applied to motors **30** and **32** through normally closed switches **S5** and **S8** and diodes **CR2** and **CR4.** The motors **30** and **32** begin retraction of arms **18** and **20** into the rectangular frame **12.** Arms **18** and **20,** when fully retracted, act to open normally closed switches **S5** and **S8** and close normally open switches **S6** and **S9.** The opening of switches **S5** and **S8** shuts off the motors **30** and **32,** stopping the retraction of the arms **18** and **20..** When the switches **S6** and **S9** are closed, power is applied to solenoid coils **L1** through **L4,** associated with each of the self-locking dogs **22** (FIG. **1**) through diode **CR6.** The power applied to solenoid coils **L1** through **L4** applies a downward force (indicated by the arrows), releasing the dogs and allowing the pin **54** to slide down the rail **56,** causing the locking stud to drop into a receptacle in a container and lock into position.

In the schematic diagram, power is shown being applied to coils **L1** through **L4** throughout the locking of the dogs in order to assure positive engagement of the locking stud **60.** However, power could be cut off to the coils to permit the dogs to free-fall into a locking position, if desired. This could be accomplished by providing a center OFF position in switch **S1.** After free-fall of the locking stud **60,** power could be reapplied to assure full engagement of the dogs. In the event that one or both of switches **S6** and **S9** fail to operate, then an additional terminal *c* on switch **S1** would provide a bypass for applying power directly to the dogs over line **66,** shown dotted in the schematic.

To remove the spreader bar from a container, the polarity of the power applied to terminal **62** and **64** is reversed. For this purpose, normally open switches **S4** and **S7** are provided which are closed by action of arms **18** and **20** shortly after retraction begins. With switches **S4** and **S7** closed and a reverse polarity applied at terminal **62** and **64,** current flows through lines **68** and **70,** reversing motors **30** and **32,** causing the arms **18** and **20** to be extended. With the arms **18** and **20** fully retracted, switches **S6** and **S9** remain closed and the reverse polarity is also applied through line **72** to solenoid coils **L5** through **L8,** associated with the dogs, causing an upward force on the locking stud **60,** thus releasing the dogs. Thus, extension of the arms **18** and **20** and retraction of the dogs from the container begins simultaneously. The upward force on the locking stud **60** causes pin **54** to ride upward in rail **56** until it latches at the top of the rail.

Again, if either or both of switches **S6** and **S9** are inoperable, reverse current may be applied to the dogs through terminal *c* of switch **S1,** and line **66,** to retract the dogs from the container. Since switches **S4** and **S7** are closed by arms **18** and **20** shortly after retraction begins, diode **CR1** assures proper polarity during retraction. Conversely, since switches **S5** and **S8** close shortly after extension of the arms **18** and **20** is begun, diodes **CR3** and **CR5** assure proper polarity during extension of the arms. Diodes **CR6** and **CR7** perform the same function for the retractable dogs.

If desired, diodes **CR6** and **CR7** could be eliminated and a single set of solenoid coils **L1** through **L4** used to release or retract the locking stud **60.** In this case, coil **L1** would be connected directly to switch **S9,** permitting forward current to release the locking studs and reverse current to retract them. However, the additional solenoid coils **L5** through **L8** provide more flexibility in that it is a back-up system to assure that the locking studs can be electrically retracted. In the event one of the coils **L1** through **L4** fails, the dogs could be locked manually. Another variation would be to connect the solenoid coils **L1** through **L4** in parallel to permit electrically locking the other dogs, even if one of the coils failed. The dog which did not operate would then be released manually. However, this is not desirable because if one of the dogs does not lock, then considerable damage could be caused in attempting to lift the container with one corner of the spreader bar unattached.

Referring again to FIG. **1,** contact switches **S2** and **S3** would be located on the lengthwise centerline of the spreader bar **10** beneath the retractable arms **18** approximately at **76.** These switches would extend slightly below the lower plane of the rectangular frame **12** in order that they be energized when the spreader bar **10**

is placed on a container. Switches S2 and S3 can be mounted in any suitable manner at the position shown and a hinged plate (not shown) could be provided to assure that they are energized when the spreader bar is placed on a container. S4 would be mounted underneath either of the retractable arms **18**, approximately at **74** so that it would be energized shortly after retraction of the arm begins. In the same way, contact switch S7, associated with retractable arms **20**, would be mounted approximately at **78**. Contact switches S5 and S6 would be mounted adjacent each other in association with one of the retractable arms **18**, approximately at **80**. They would be simultaneously operated by arms **18** at full retraction. Contact switches S8 and S9 would be mounted in the same manner in association with one of the retractable arms **20**, approximately at **82**. Alternatively, contact switches S5 and S6 could be mounted in the side rail of rectangular frame **12** for operation by the end of the retractable arm when it is fully retracted. If desired, contact switches S5 and S8 could be mounted slightly ahead of contact switches S6 and S9, in which case the latter switches would be energized by over-travel of the motor. Contact switches S2 through S9 can be micro-switches or any other suitable spring-operated switch. For example, switches S5 and S6 could be a single commutator-type switch which rotates from one closed position to a second position.

In order to avoid any outward protrusions from the rectangular frame **12**, retractable arms **18** and **20** can be provided with angled cam surfaces **84** on the underside of hook-like projections **52**. The cam surfaces **84** would cause the retractable arms **18** and **20** to ride upward after alignment is complete until they are flush with the outer surface of the rectangular frame **12**.

Thus, there has been disclosed a self-activated container spreader bar which eliminates the problem of punching holes in the tops of containers and eliminates substantially the need for precision placement and manual operation, whether by helicopter or otherwise. The character of this spreader bar system allows placement in practically blind areas with an error of as much as an estimated half the width of the spreader.

Obviously, many modifications and variations of the present invention are possible in light of the above teachings. It is therefore to be understood that within the scope of the appended claims the invention may be practiced otherwise than as specifically described.

I claim:

1. A container handling spreader bar comprised of:

a. a rectangular frame;

b. a skirt attached to the frame and extending downward along one side and the adjacent end;

c. first and second pairs of substantially parallel, spaced apart, movable arms mounted in the frame and extendable from the side and end opposite the skirt;

d. downward projections on the ends of said arms for drawing the spreader bar into alignment with the top of a container after placement;

e. means for extending and retracting the movable arms;

f. means for automatically energizing the arm retracting means when the spreader bar is placed on top of a container;

g. four self-locking retractable dogs attached to each inside corner of the frame;

h. means for retracting the dogs;

i. means for keeping the dogs retracted during positioning of the spreader bar; and

j. means for automatically releasing the dogs when the spreader bar is aligned with the top of a container.

2. The container handling spreader bar of claim **1** wherein the means for extending and retracting the arms comprise:

a. an electric motor for each pair of movable arms attached to the top of the rectangular frame and having gears engaging a rack on each movable arm; and

b. means for reversing the polarity of the motor to permit extension or retraction of the arms.

3. The container handling spreader bar of claim **2** wherein the means for energizing the arm retracting means comprises at least two contact switches mounted underneath the rectangular frame, equally spaced from each end along the lengthwise centerline.

4. The container handling spreader bar of claim **3** wherein the means for reversing the polarity of the motors to permit extension or retraction of the arms comprises:

a. a first pair of series-connected switches, one of said first switches associated with each pair of arms and adapted to be closed when the arms are extended, and open when the arms are fully retracted; and

b. a second pair of series-connected switches, one of said second switches associated with each pair of arms and adapted to be closed when the arms are retracted, and open when the arms are fully extended.

5. The container handling spreader bar of claim **4** wherein the means for keeping the dogs retracted comprises a spiraling rail in the dog housing, and a pin attached to the dog slidably engaging in the spiraling rail.

6. The container handling spreader bar of claim **5** wherein the means for releasing the dogs comprises:

a. a solenoid coil associated with each dog;

b. a pair of limit switches associated with each pair of retractable arms; said limit switches being closed when the arms are fully retracted; whereby the solenoid coil associated with each dog is activated, releasing the pin to slide down the spiraling rail to lock the dogs onto the container.

7. The container handling spreader bar of claim **6** wherein said means for retracting the dogs comprises:

a. a second solenoid coil associated with each dog; and

b. means for applying a reverse current to the second solenoid coils, thereby exerting an upward force on the dogs, causing the retaining pin to slide up the spiraling rail and latch the dogs in a retracted position.

8. The container handling spreader bar of claim **1** wherein the downward projections on the ends of the movable arms are formed with angled cam surfaces to force the ends of the arms upward after alignment is complete so that the arms are flush with the outside surface of the rectangular frame.

* * * * *