United States Patent [19]

Glaister et al.

[11] **3,862,381**

[45] **Jan. 21, 1975**

[54] **KEYBOARD SWITCH ASSEMBLY WITH MULTILAYER, COEXTENSIVE CONTACTOR MEANS**

[75] Inventors: **Frank Joseph Glaister**, Salisbury; **Vincent Squitieri**, Billerica; **William J. Lynn**, Groveland, all of Mass.

[73] Assignee: **Chomerics, Inc.**, Woburn, Mass.

[22] Filed: **Oct. 29, 1973**

[21] Appl. No.: **410,327**

[52] **U.S. Cl.** ..... **200/5 A**, 200/5 R, 200/159 B, 200/262, 200/265

[51] **Int. Cl.** **H01h 13/70**, H01h 1/02

[58] **Field of Search** ..... 200/1 R, 5 R, 5 A, 159 R, 200/159 B, 166 C, 262, 264, 265, 267, 275; 333/98

[56] **References Cited**

UNITED STATES PATENTS

3,140,342	7/1964	Ehrreich et al.	333/98 X
3,594,684	7/1971	Miller	200/159 B
3,676,615	7/1972	Wiedmer	200/5 R X
3,699,294	10/1972	Sudduth	200/5 A X
3,705,276	12/1972	Seeger, Jr. et al.	200/5 A
3,721,778	3/1973	Seeger, Jr. et al.	200/166 C X
3,728,509	4/1973	Shimajo	200/159 B
3,742,797	7/1973	Hoffman	200/1 R
3,773,998	11/1973	Seeger, Jr. et al.	200/159 B
3,780,237	12/1973	Seeger, Jr. et al.	200/5 A
3,789,167	1/1974	Seeger, Jr. et al.	200/159 B X

OTHER PUBLICATIONS

IBM Technical Disclosure Bulletin, Kuntzleman, "Keyboard Transducer," Vol. 7, No. 12, page 1170, May 1965.

IBM Technical Disclosure Bulletin, Sedaris et al., "Elastic Diaphragm Switch", Vol. 14, No. 3, page 767, August 1971.

Primary Examiner—James R. Scott

Attorney, Agent, or Firm—Dike, Bronstein, Roberts, Cushman & Pfund

[57] **ABSTRACT**

A keyboard structure which includes a circuit board or the like having a plurality of contacts, an insulator layer having a plurality of holes therethrough, said holes positioned above said board to expose said contacts, composite means comprising an electrically non-conductive elastomeric layer having adhered thereto and covering a major portion of one side thereof, a thin flexible electrically conductive non-selfsupporting and non-elastomeric plastic layer having electrically conductive particles dispersed therethrough, and means for pushing the non-conductive layer and the conductive layer through said holes to make electrical contact with contacts.

17 Claims, 6 Drawing Figures

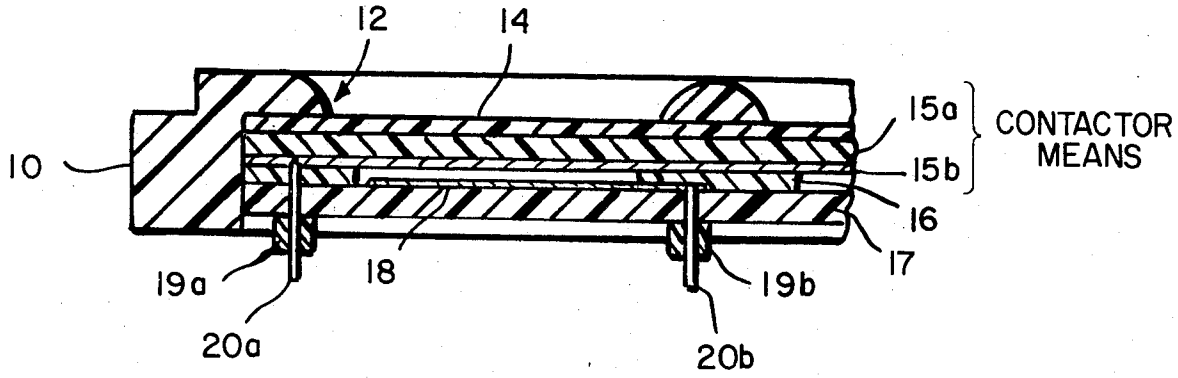

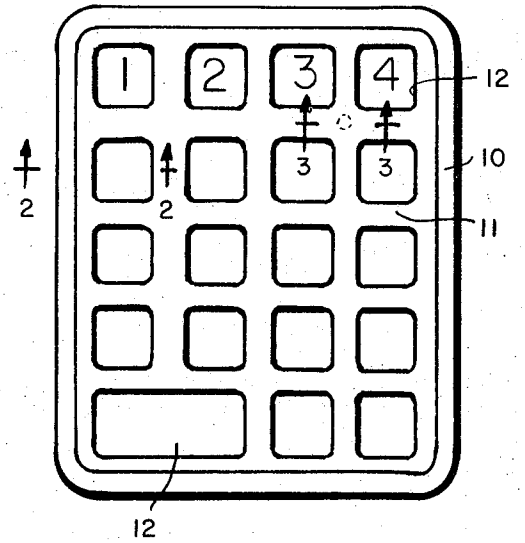

FIG. 1

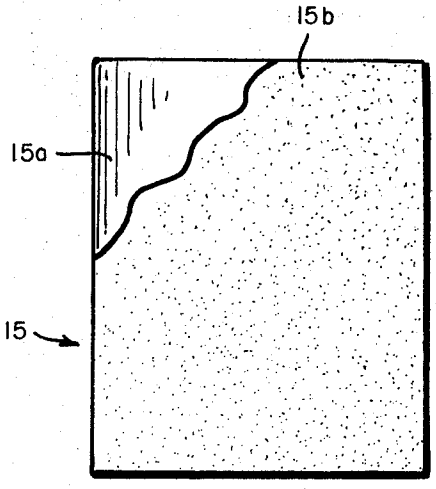

FIG. 4

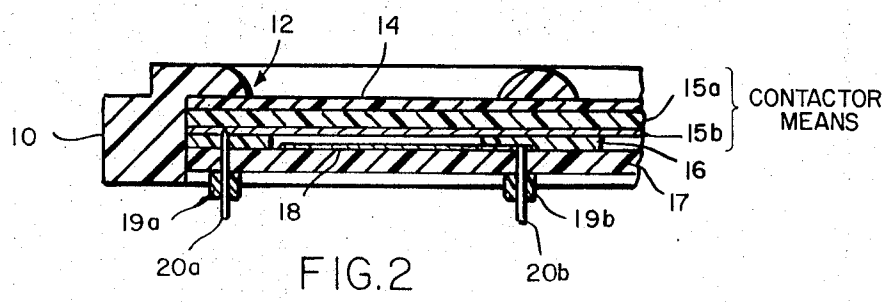

FIG. 2

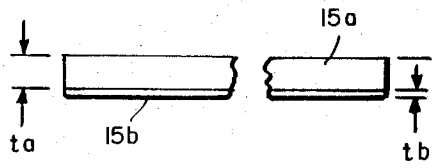

FIG. 5

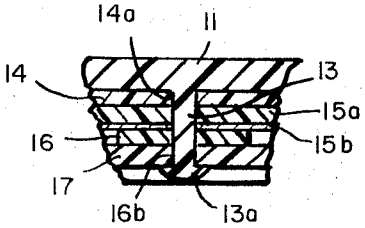

FIG. 3

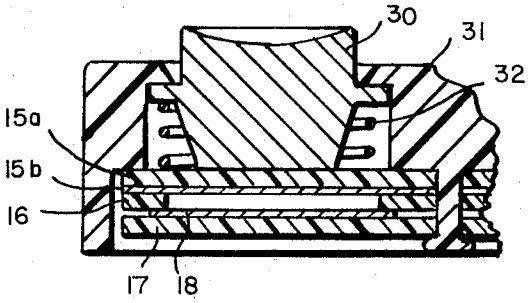

FIG. 6

KEYBOARD SWITCH ASSEMBLY WITH MULTILAYER, COEXTENSIVE CONTACTOR MEANS

BACKGROUND OF THE DISCLOSURE

This invention is directed to a new and improved keyboard structure for converting key depression to a coded electrical output and is more particularly directed to a new and improved composite electrical contactor means.

The present invention differs from the keyboard structures of the prior art such as shown in U.S. Pat. Nos. 3,705,276, and 3,699,294 which discloses a single relatively thick layer contactor of elastomeric material filled with electrically conductive particles, e.g., carbon, silver, etc., by providing a composite contactor of a thicker layer elastomeric, i.e., unfilled and non-electrically conductive, supporting a much thinner layer or coating of an electrically conductive flexible non-elastomeric conductive plastic.

The present invention provides substantial cost savings in comparison with the aforementioned prior art keyboard contactors with cost savings running 50 percent and more, while at the same time providing a very useful contactor for a keyboard.

The present invention also differs from other prior art keyboards which uses a non-conductive layer of plastic or elastomer plated with a layer of metal. Again the present invention provides substantial cost savings over this prior art with material cost savings again estimated to run 50 percent and more.

While these cost savings may not seem impressive in themselves, when one considers of the entire keyboard, it must be remembered that the keyboards of this invention find substantial utility in the consumer calculator market in which prices at this time are dropping rapidly.

Accordingly, when calculator manufacturers are looking for cost reductions, a keyboard manufacturer to remain competitive must also constantly pursue developments which can keep it competitive.

This invention provides one such cost saving development and permits a keyboard manufacturer to remain competitive in a market in which end product retail prices are decreasing rapidly.

BRIEF DESCRIPTION OF THE DRAWINGS

FIG. **1** is a top view of a keyboard according to the invention;

FIG. **2** is a sectional view taken along line **2—2** of FIG. **1**;

FIG. **3** is a sectional view taken along line **3—3** of FIG. **1**;

FIG. **4** is a bottom view of the composite member;

FIG. **5** is an enlarged side view of the composite member; and

FIG. **6** illustrates in cross-section a button shown as a key.

DETAILED DESCRIPTION OF THE PREFERRED EMBODIMENT

Reference should now be had to FIGS. **1–5** for a description of the preferred embodiment of the disclosure. The keyboard comprises a frame **10** preferably of insulator material, more preferably of a plastic, e.g., A.B.S. (a high impact polystyrene) or polyethylene.

The frame **10** is provided with a plurality of divider members **11** which form the walls of windows **12** extending through the frame **10.**

The underside of the frame includes a plurality of rods **13** (preferably formed at the same time as the frame, i.e., by molding (see FIG. **2**) which extend downwardly as shown in FIG. **3.** Reference may also be hade to U.S. Pat. No. 3,721,778 for a further description of the frame, rods, the construction of a keyboard.

The rods **13** may be softened by heat to form heads **13a** to hold the keyboard assembly together as shown in FIG. **3.** Alternatively, the rods may be threaded and nuts may be used to hold the keyboard assembly together.

Positioned directly below the frame member **11** is a thin plastic insulator layer **14,** e.g., of Mylar which has indicia applied thereto. Instead of the layer **14** with indicia which functions as keys of the keyboard, buttons having indicia thereon may also be used as keys such as shown in U.S. Pat. No. 3,721,778 or U.S. Pat. application Ser. No. 297,721 filed Oct. 16, 1972 now U.S. Pat. No. 3,780,237 and Ser. No. 297,636 filed Oct. 16, 1972 now U.S. Pat. No. 3,773,998 or as shown in FIG. **6.**

Positioned below the layer **14** is a composite electrical contactor **15** which comprises a non-electrically conductive elastomeric layer **15*a*** supporting and having coupled or adhered (by adhesion e.g., an adhesive) thereto a thin non-selfsupporting and non-elastomeric flexible electrically conductive plastic layer **15*b*.**

The elastomeric layer **15*a*** may comprise any of the well known elastomeric, resilient materials such as silicone rubber or fluoro silicone rubber, nitrile rubber, natural rubber etc.

The flexible non-elastomeric electrically conductive plastic layer **15*b*** comprises non-elastomeric plastics such as polyamides (e.g., Versalon 1140, polyamide adhesion resin by General Mills), polycarbonates (e.g., Lexan by General Electric) polyester (e.g., Mylar), epoxy (CORVEL by Polymer Corp.), polyacetate, polysterene etc., unmodified or modified if needed by a plastisizer to obtain the desired flexibility to permit the layer **15** to flex with the layer **15*a*** and not separate or break away therefrom after continuous prolonged use.

The layer **15*b*** also contains electrically conductive particles dispersed therethrough such as silver particles, carbon particles or other well known conductive particles such as shown in U.S. Pat. No. 3,140,342 and No. 3,576,387.

The amount of electrical particles may vary with particles in the amount of 20 to 40 percent volume being preferred, although in this application the amount may vary over a wide range, e.g., 10 to 80 percent volume percent.

In the preferred embodiment the layer **15*a*** is preferably of a thickness t_a of between 5 to 200 mils with 5 to 100 mils being more preferred and 20 to 50 mils being most preferred. The layer **15*b*** is preferably of thickness t_b of between 5 microns (0.197 mil) to 2.0 mils with a thickness of 10 microns (0.394 mil) to 25 microns (0.984 mil) being more preferred and a thickness of 10 microns (0.394 mil) to 20 microns (0.788 mil) being most preferred (about 25.4 microns = 1 mil).

In the preferred embodiment the composite contactor is constructed using a nitrile rubber layer **15*a*** made by combining Hycar 1042 (NBR) (B. F. Goodrich), 100 parts by weight with zinc oxide 1 part by weight,

hydrated silica (HI-SIL215), 40 parts by weight, dicumyl peroxide 5 parts by weight and then curing.

The layer **15b** was made by mixing about 63 percent by volume of Versalon **1140** with 37 percent by volume of silflake 135, and then coating it on the layer **15a** after it is formed e.g., by using an artists air brush. Solvents such as toluene and 1-propanol as in Example 7 may be added to the Versalon 1140 and Silflake 135 such as shown in U.S. Pat. No. 3,576,387 may be added to permit easy spraying or coating e.g., by a knife. The solvents are then permitted to evaporate in air.

The composite contactor **15** is positioned over an insulator or separator plastic layer **16** e.g., of Mylar having a plurality of windows **16a** extending therethrough in alignment with windows **12.** with the layer **15b** directly over the windows **16a**. See U.S. Pat. Nos. 3,699,294 and 3,705,276 for a further description of the separator layer.

The rods **13a** also extend through holes **16b** in layer **16** to locate the layer **16** within the frame **10.** Below the layer **16** is a typical circuit board **16** e.g., of Bakelite having a plurality of electrically conductive contacts, contact elements or pathways formed thereon. See U.S. Pat. Nos. 3,705,276 and No. 3,721,778 for an illustration of various possible pathways.

The circuit pattern may be formed conventionally from copper which is etched or by the spraying of conductive paint.

The electrical pathways are at least in part aligned with the windows **16a** so that the application of pressure by a finger to the key or force applying layer **14** can push portions of the composite layer **15** through the windows **16a** and particular layer **15b** against the pathways. In this manner electrical contact is made between the layer **15b** and the pathways **18.**

Where the force is withdrawn, the resiliency of the elastomeric layer **15a** causes it to withdraw pulling the flexible non-elastomeric layer **15b** back with it and breaking electrical contact between layer **15b** and the pathways. Most preferably the thickness of layer **15a** is at least **5** times that of layer **15b.**

In order to make electrical contact with the electrically conductive layer **15b** as well as the pathways **18,** there are provided pins **20a** and **20b** retained with connector supports **19a** and **19b** respectively with pin **20a** in contact with layer **15b** and pin **20b** in contact with pathway **18.**

It should be understood that while preferred dimensions are given for the layers **15a** and **15b**, functionally the thickness of the layer **15a** should be sufficient to provide the elasticity to pull the layer **15b** back with after being depressed while the layer **15b** should be as thin as physically possible to save as much money as possible so long as it provides good electrical conductivity for use as a contactor.

The volume resistivity of the conductive layer is preferably less than **10** ohm cm., more preferably less than 1 ohm cm., and most preferably less than 0.5 ohm cm. As used herein the term non-selfsupporting means that the layer unless backed as shown would curl up and not be useful for its intended purpose i.e., as a keyboard contactor layer for covering a plurality of openings in the insulator therebelow.

In FIG. **6** there is shown a button **30** preferably of non-conductive plastic supported in a redesigned frame **31** and held in its undepressed condition by a spring **32.** The remainder of the keyboard members are identical with that of FIGS. **1–5** and are so numbered. Upon depression of the key **30** by a finger, the conductive layer **15b** is brought into contact with the pathway **18.**

We claim:

1. A keyboard assembly including in combination an electrical circuit board having contact elements, a separator insulator layer positioned over said circuit board, said separator insulator layer having openings registerable with portions of said contact elements, the improvement being a composite contactor positioned over said separator layer for movement through each of said openings to contact said contact elements said contactor comprising a nonconductive resilient, flexible, elastomeric layer supporting an electrically conductive non-elastomeric and non-selfsupporting flexible plastic layer adhered thereto and coextensive therewith for movement therewith, said non-conductive layer being

greater in thickness than said conductive layer and said conductive layer having a volume resistivity of about or less than 10 ohm centimeters, and said conductive layer being positioned directly over said openings.

2. A keyboard assembly according to claim **1** in which the conductive layer is less than 1.969 mil in thickness and in which the elastomeric layer is between 5 to 200 mils in thickness.

3. A keyboard assembly according to claim **2** in which the conductive layer has silver particles dispersed therethrough.

4. In a keyboard according to claim **1** in which the conductive layer is 0.197 mil to 1.0 mils in thickness.

5. In a keyboard according to claim **4** in which the elastomeric layer is 5 to 200 mils in thickness.

6. In a keyboard according to claim **1** in which the conductive layer is of a lesser thickness than the non-conductive elastomeric layer with the elastomeric layer being of a thickness sufficient and at least about 5 times that of the conductive layer to provide the elasticity to pull the conductive layer back with it after being depressed and the conductive layer being thick enough to provide electrical conductivity.

7. In a keyboard according to claim **6** in which the volume resistivity is less than 10 ohm cm.

8. In a keyboard according to claim **7** in which the volume resistivity is less than 1 ohm cm.

9. In a keyboard according to claim **8** in which the volume resistivity is less than 0.5 ohm cm.

10. In a keyboard according to claim **1** said conductive plastic layer comprises a plastic binder and electrically conductive particles dispersed therethrough.

11. In a keyboard which includes an insulator board having circuit pathways thereon, insulator means having a plurality of windows therethrough in alignment with selected portions of the pathways, composite contactor means positioned on the insulator layer and covering said windows of said insulator layer, said contactor means comprising an elastomeric layer having a thinner, flexible non-elastomeric electrically conductive plastic layer physically adhered thereto and coextensive therewith, said conductive layer positioned over at least one of said windows, and pressure application means for forcing said composite contactor through said windows to cause said conductive layer to electrically contact portions of said pathways, said elastomeric layer being thick enough to keep said conductive layer away from said pathway portions in the ab-

sence of pressure applied to pressure application means and for pulling said conductive layer away with it from said pathways after application of pressure to said pressure application means, and said conductive layer being thick enough to provide electrical conductivity while not being so inflexible to separate from the elastomer upon being flexed in continuous use.

12. In a keyboard according to claim **11** in which the conductive layer is 5 to 100 microns in thickness.

13. In a keyboard according to claim **12** in which the elastomeric layer is 10 to 100 mils in thickness.

14. In a keyboard according to claim **11** in which the conductive layer is of a thickness less than 1 mil.

15. In a keyboard according to claim **14** in which the conductive layer is of a thickness less than 0.788 mil.

16. In a keyboard according to claim **4** in which the conductive layer comprises polyamide adhesive resin having silver particles dispersed therein.

17. In a keyboard according to claim **4** in which said conductive plastic layer comprises a plastic binder and electrically conductive particles dispersed therethrough.

* * * * *

UNITED STATES PATENT OFFICE

CERTIFICATE OF CORRECTION

PATENT NO. : 3,862,381

DATED : January 21, 1975

INVENTOR(S) : Frank J. Glaister

It is certified that error appears in the above-identified patent and that said Letters Patent are hereby corrected as shown below:

In the specification

Column 2 line 38 "adhesion" should be --adhesive--

In the claims

Claim 16 "claim 4" should be --claim 11--

Claim 17 "Claim 4" should be --claim 11--

Signed and Sealed this

fourteenth Day of *October 1975*

[SEAL]

Attest:

RUTH C. MASON
Attesting Officer

C. MARSHALL DANN
Commissioner of Patents and Trademarks

UNITED STATES PATENT OFFICE
CERTIFICATE OF CORRECTION

PATENT NO. : 3,862,381

DATED : January 21, 1975

INVENTOR(S) : Frank J. Glaister

It is certified that error appears in the above–identified patent and that said Letters Patent are hereby corrected as shown below:

In the specification

Column 2 line 38 "adhesion" should be --adhesive--

In the claims

Claim 16 "claim 4" should be --claim 11--

Claim 17 "Claim 4" should be --claim 11--

Signed and Sealed this

fourteenth Day of *October 1975*

[SEAL]

Attest:

RUTH C. MASON
Attesting Officer

C. MARSHALL DANN
Commissioner of Patents and Trademarks