United States Patent [19]

Sick et al.

[11] **3,858,043**

[45] **Dec. 31, 1974**

[54] **LIGHT BARRIER SCREEN**

[75] Inventors: **Erwin Sick**, Icking; **Ernst Gass**, Munich, both of Germany

[73] Assignee: **Erwin Sick Optik-Elektronic**, Waldkirch, Germany

[22] Filed: **Sept. 20, 1973**

[21] Appl. No.: **398,943**

[30] **Foreign Application Priority Data**

Sept. 26, 1972 Germany 2247053

[52] **U.S. Cl.** ..... **250/221**, 340/258 B

[51] **Int. Cl.** **G06m 7/00**, G08b 13/00

[58] **Field of Search** ..... 250/209, 221, 222; 317/124; 340/258 B

[56] **References Cited**

UNITED STATES PATENTS

2,930,898	3/1960	Nuttall et al.	250/222
3,293,513	12/1966	Biard et al.	313/108 D
3,742,222	6/1973	Endl	250/209
3,764,813	10/1973	Clement	250/221

Primary Examiner—James W. Lawrence
Assistant Examiner—T. N. Grigsby

[57] **ABSTRACT**

A light barrier screen having a plurality of sequentially arranged light sources which emit a light beam occupying a given predetermined area, and a photosensitive receiver which registers the intensity of the light beam coming out of the predetermined area and emits an output signal upon a given decrease in intensity of one or more light beams, said individual light sources being introduced through a single energy source in rapid temporal sequence.

2 Claims, 5 Drawing Figures

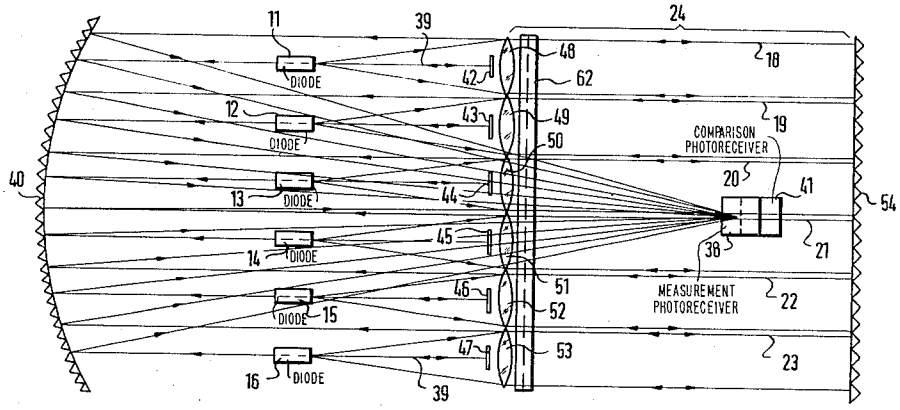

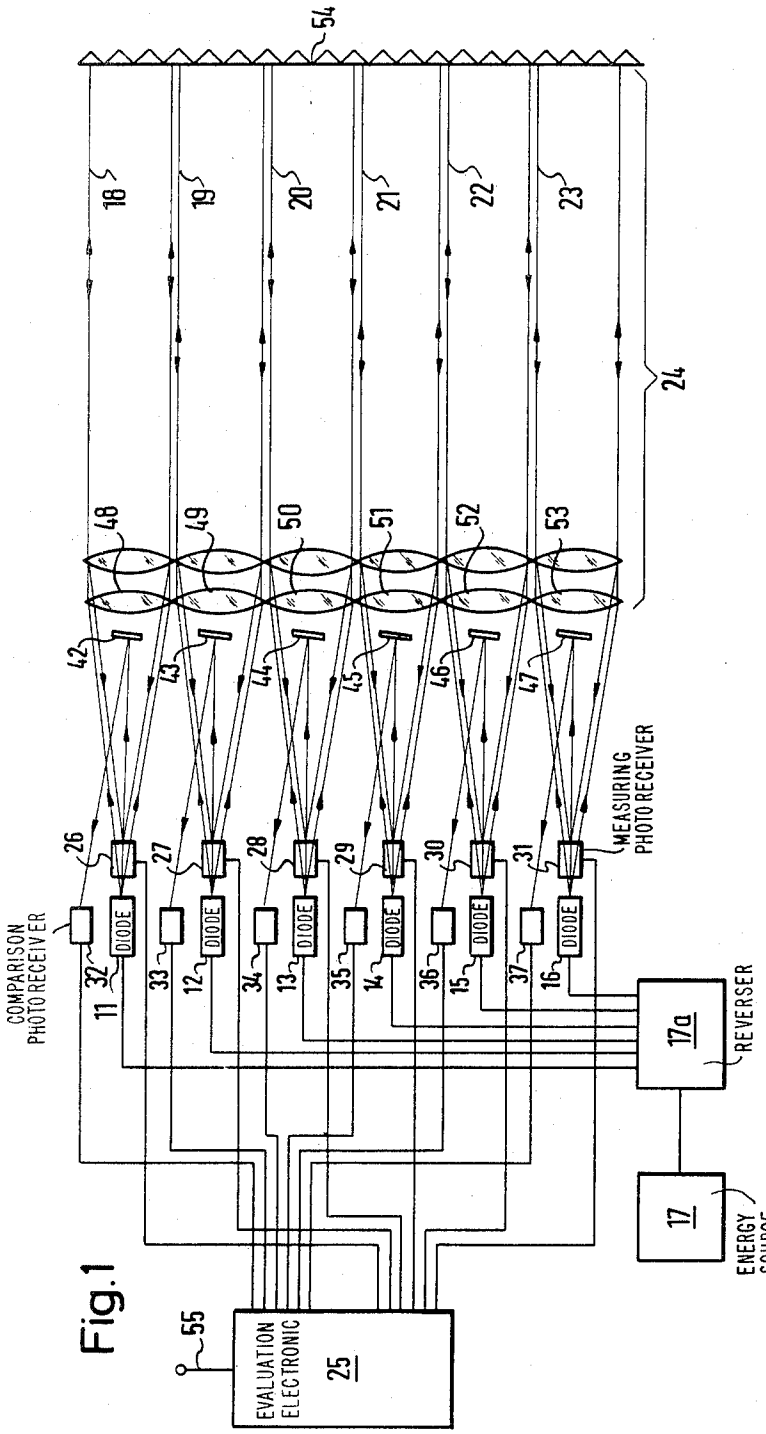
54
18
19
20
21
22
23
24
48
49
50
51
52
53
42
43
44
45
46
47
26
27
28
29
30
31
MEASURING PHOTO RECEIVER
COMPARISON PHOTO RECEIVER
DIODE
11
32
33
12
34
13
35
14
36
15
37
16
17a
REVERSER
17
ENERGY SOURCE
55
EVALUATION ELECTRONIC
25

Fig.1

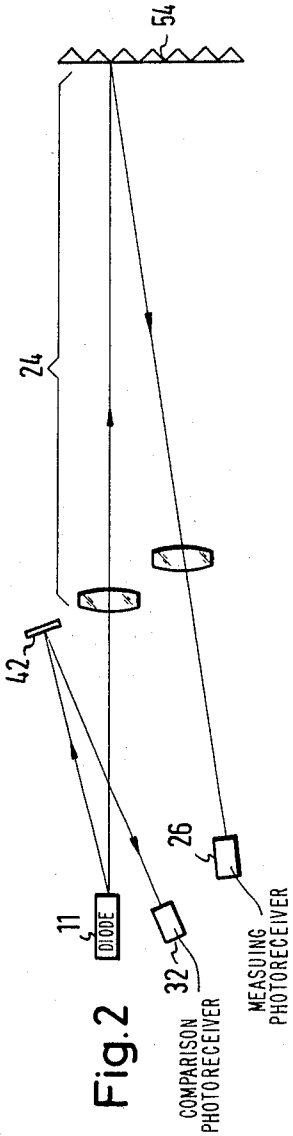
54
24
42
26
11
DIODE
32
COMPARISON PHOTORECEIVER
MEASUING PHOTORECEIVER

Fig.2

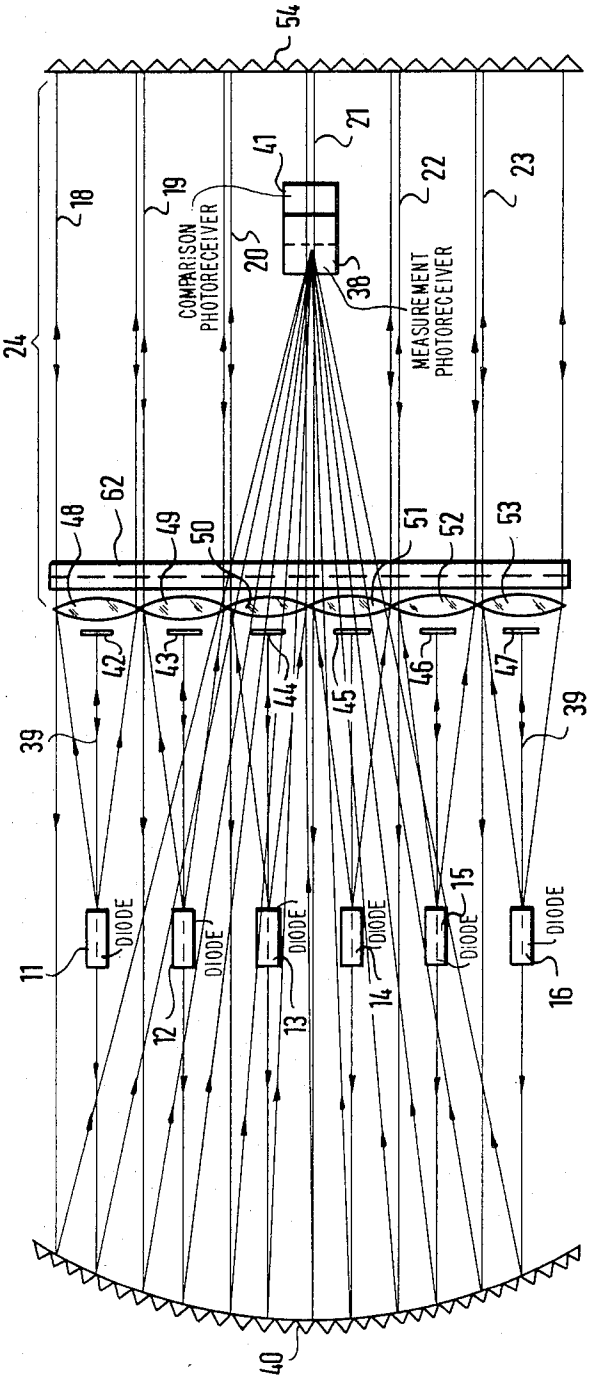
54
18
19
21
22
23
24
41
20
38
COMPARISON PHOTORECEIVER
MEASUREMENT PHOTORECEIVER
48
62
49
50
51
52
53
42
43
44
45
46
47
39
39
11
12
13
14
15
16
DIODE
DIODE
DIODE
DIODE
DIODE
DIODE
40

Fig.3

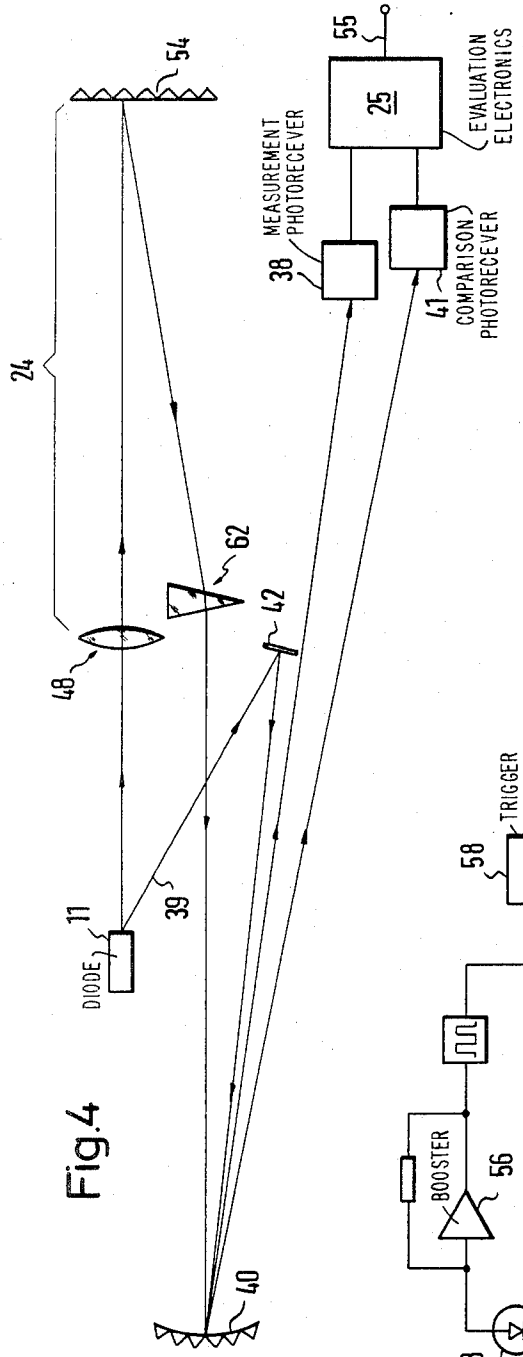
54
55
25
EVALUATION ELECTRONICS
MEASUREMENT PHOTORECEVER
38
41
COMPARISON PHOTORECEVER
24
62
42
48
39
11
DIODE
40

Fig.4

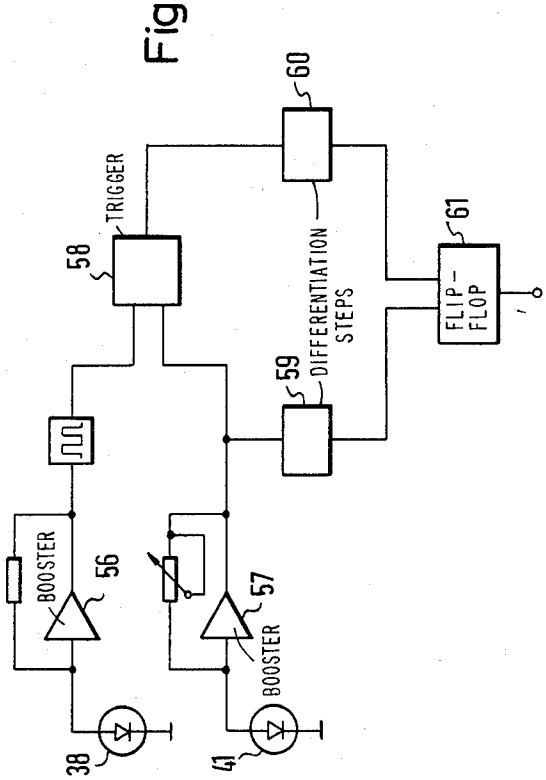
60
TRIGGER
58
DIFFERENTIATION STEPS
61
FLIP-FLOP
59
BOOSTER
56
57
BOOSTER
38
41

Fig.5

LIGHT BARRIER SCREEN

FIELD OF THE INVENTION

The present invention concerns a light barrier screen with (1) a plurality of sequentially arranged light sources which emit a light beam occupying a predetermined area, and (2) a photosensitive receiver which registers the intensity of the light beam coming out of the predetermined area and emits an output signal upon a given decrease in intensity of one or more light beams. Light barrier screens of this type are already known (DAS 1,170,286) and are utilized as guards for relatively large surface areas. They are, for example, used as safety light curtains in front of the danger zones of machines such as presses, giving an automatic shut-off signal when a hand or other body part approaches the danger zone.

SUMMARY OF THE INVENTION

The aim of the present invention is a light barrier screen of the above-named type in which the cost of its practical embodiment is substantially lowered without adversely affecting the high requirements of reliability and safety which are made upon such screens. The present screen is also of compact, neat design and easy to manufacture.

To accomplish this, the present invention provides that the individual light sources can be introduced through a single energy source in quick temporal succession. In this manner, a sort of radius vector (guide beam) principle results, but without the necessity of using mechanically moving parts such as mirror wheels or vibrating mirrors. It is an advantage of the present invention that only a single energy source is called for, which constitutes a considerable cost reduction. Between the energy source and the individual light sources is located, in accordance with the present invention, an electronically operated reverser switch, which connects the light sources with the energy source in the temporal sequence mentioned above.

A further substantial simplification is achieved in accordance with the present invention in that for the evaluation of the electric signals actuated by the individual light beams leaving the guard area there is only one single evaluation-electronics provided.

In case a photoreceiver is provided for each light source, a reverser switch is placed between the photoreceiver and the evaluation-electronics, and the reverser switch is in the same rhythm on the evaluation-electronics as the photoreceivers on the light source side.

An advantageous practical embodiment provides that each light source is set up with a measuring photoreceiver which receives the light beam out of the guard area and another comparison-photoreceiver which receives light emitted by the light source but not traversing the area, and that the outputs of both measuring and comparison-receivers are hooked up to a comparison circuit inside the evaluation-electronics. In the comparison circuit the quotient of the two signals is formed, so that differences of background brightness of the light sources utilized as well as age phenomena, temperature influences, etc., are completely excluded. Thus in simple fashion a device which is not sensitive to disturbances is obtained.

Yet another substantial simplification is obtained in that all of the light beams escaping from the guard area

are optically unified on a single measurement-photoreceiver to which the evaluation-electronics is connected. In this form of embodiment there is thus required only one measuring photoreceiver for numerous light sources.

It is further advantageously provided that the comparison rays emitted by each light source are united by the same optics as the measurement rays to a single comparison-photoreceiver, which is hooked up to a comparison circuit provided in the evaluation-electronics. In the comparison circuit another quotient-formation takes place. The advantage constituted by the non-sensitivity to vacillations of background brightness is thus achieved in this embodiment with the advantage that only a single comparison photoreceiver is required, while the optics used for the measurement ray is doubly exploited.

It is especially advantageous if the light sources are light-emitting diodes, and Ga-AS-Diodes are used to the best advantage. Diodes of this type are remarkable for their ease of handling. In accordance with the present invention, they are hooked up sequentially to the energy source by means of a shifting register which is available at very reasonable cost on the present-day market.

When the inventive light screen is utilized as a safety light curtain in front of a danger zone in a machine such as a press, the frequency with which the light sources are sequentially hooked up is so high that in case of the instrusion of a human hand inside the light curtain the shut-off signal occurs before the danger zone is reached by the hand. The optimal frequency is in the order of magnitude of 5kHz.

BRIEF DESCRIPTION OF THE DRAWING

The present invention will now be described by means of drawings designated hereinafter as FIGS. **1** through **5**;

FIG. **1** is a schematic representation of the circuit and of the light beam paths of a first embodiment of the inventive light barrier screen;

FIG. **2** is a side view of the topmost optical partial arrangement indicated in FIG. **1**;

FIG. **3** is a schematic view of the optical portion of a particularly advantageous embodiment of a light barrier screen in accordance with the present invention;

FIG. **4** is a side view of the object of FIG. **3**; and

FIG. **5** is an example of embodiment of an evaluation-electronics for the inventive light barrier screen.

DETAILED DESCRIPTION OF PREFERRED EMBODIMENT

In accordance with FIG. **1**, six Ga-As Diodes **11, 12, 13, 14, 15,** and **16** are sequentially connected in such a way that the light emitted by them through paired lenses **48, 49, 50, 51, 52** respectively result in light beams **18, 19, 20, 21, 22,** and **23,** which are very close together and substantially parallel. Light beams **18–23** are reflected by natural dispersion into a triple mirror **54** in such a way that they fall into the second rank of the paired lenses **48–53** and a reflection on measuring photoreceivers **26, 27, 28, 29, 30,** and **31** results, which may be especially readily seen in FIG. **2.** We are thus dealing with a reflection in accordance with the autocollimation principle through pupillary division.

Beams **18–23** thus make up a guard area **24.** If an obstacle is introduced into this area, the light stream

reaching one of the measurement photoreceivers **26–31** is correspondingly weakened. This decrease in intensity is transmitted for evaluation.

In accordance with the present invention all six light-emitting diodes **11-16** are connected to an energy source **17** via a reverser **17a**. The reverser guarantees that only one diode at one time is charged with voltage and that in rapid sequence all diodes are cyclically charged, while this operation is constantly repeated. If this operation occurs with a sufficiently high frequency in the order of magnitude of 1 through 10 kHz, a light curtain which is for all practical purposes uninterrupted is generated in guard area **24**.

Measurement photoreceivers **26–31** are hooked up to an evaluation-electronics **25**, which delivers a signal at its output **55** as soon as the intensity of the light reaching any of the measurement photoreceivers falls beneath a given predetermined value.

Differences in background brightness of the light-emitting diodes being used, as well as of other disturbances influencing diode brightness, can be excluded in that each of the diodes **11–16** is arranged in front of guard area **24** but next to the plane mirrors **42, 43, 44, 45,** and **46** which are arranged for the measurement of ray paths, said plane mirrors connecting one portion of the light emitted by the relevant diode to comparison-photoreceivers **32, 33, 34, 35, 36,** and **37** respectively.

Also, comparison-photoreceivers **32** through **37** are hooked up to the evaluation electronics **25** in which a comparison circuit is located, in which the quotient from the electric signals of each measurement-comparison-photoreceiver pair is formed. In this fashion differing background brightnesses of the light sources being used are of as little significance in the evaluation as aging phenomena or temperature influences on the light sources.

In the embodiment illustrated by FIGS. **3** and **4**, the light rays escaping from guard area **24** are reflected (instead of through lenses) through a wedge **62** arranged as in the drawing and a concave mirror **40** together upon a single measurement-photoreceiver **38** which is hooked up to the evaluation-electronic **25** shown in FIG. **4**.

To each of the diodes **11-16** a small plane mirror (**42–47**) is connected (said mirrors having been appropriately arranged relative to the measurement beam path). Each of the said mirrors throws light escaping from the light source arranged relative to it onto a concave mirror **40**, which unifies the light coming from all the mirrors onto a single comparison-photoreceiver **41**. As may be seen from FIG. **4**, plane mirrors **42–47** are arranged relative to paired lenses **48–53** in such a way that light is used for comparison-beam **39** which otherwise would not enter the measurement beam path.

FIG. **5** shows a circuit for evaluation of the signals emitted by photoreceivers **38** and **41**. These are first boosted in boosters **56** and **57** and then applied to both entrances of a trigger **58**. In accordance with the present invention, the output of the trigger is zero as long as the signal transmitted from diode **38** is smaller than the signal from reference diode **41**. The output of the trigger is however L, if the signal from diode **38** is greater than the signal coming from diode **41**.

At the output of booster **57** a differentiation step **59** is connected which emits an output only for the positive side of an impulse reaching **41**. Also at the output of trigger **58** a differentiation step **60** is connected, which however emits an output impulse only upon the presence of the negative side of an impulse appearing at trigger **58**.

The two differentiation steps are applied at the inputs of a settable flip-flop **61**.

During normal operation, output impulses appear in regular sequence at the output of trigger **58**, so that at the output of flip-flop **61** an alternating current appears. If, however, the signal at receiver diode **38** sinks beneath a given predetermined value in consequence of the introduction of an obstacle inside of guard area **24**, at least one of the impulses at the output of trigger **58** disappears and flip-flop **61** remains slightly longer in the position determined by differentiation step **59**. In the output of flip-flop **61** there is applied in accordance with the present invention, a very rapid automatic circuit like a relay which is responsive to every single impulse, and if a single impulse of the series is missing it immediately actuates a warning signal or a switch-off mechanism to stop the machine. The circuit in accordance with FIG. **5** is also intrinsically safe and reliable, because if any of the circuit factors is missing the same effect is obtained as by introducing an obstacle in guard area **24**.

While the above described embodiments constitute the presently preferred modes of practicing the invention, other embodiments or equivalents are within the scope of the actual invention, which is claimed as;

1. A light barrier screen having a plurality of sequentially arranged light sources which emit a light beam occupying a given predetermined area, said individual light sources being introduced through a single energy source in rapid temporal sequence, the light beams coming out of said area being optically unified upon a single measurement-photoreceiver which registers the intensity of the light beams coming out of said area and emits an output signal upon a given decrease in intensity of one or more light beams, and a single evaluation electronics connected to said measurement-photoreceiver for the evaluation of electrical signals actuated by the individual light beams coming out of said area.

2. Light barrier screen in accordance with claim **1**, wherein comparison-beams emitted by each of the light sources are unified through the same optics as the measurement beams upon a single comparison-photoreceiver which is hooked up to a comparison circuit provided in the evaluation-electronic.

* * * * *