United States Patent [19]

Kobayashi

[11] **3,855,740**

[45] **Dec. 24, 1974**

[54] **CENTRIFUGAL BARREL FINISHING APPARATUS HAVING TILTABLE TUBS**

[75] Inventor: **Hisamine Kobayashi,** Nagoya, Japan

[73] Assignee: **Shikishima Tipton Mfg. Co. Ltd.,** Nagoya City, Aichi Pref., Japan

[22] Filed: **Feb. 14, 1973**

[21] Appl. No.: **332,378**

[30] **Foreign Application Priority Data**

Feb. 19, 1972 Japan 47-17340

[52] **U.S. Cl.** **51/164,** 233/25

[51] **Int. Cl.** **B24b 31/04**

[58] **Field of Search** 134/79, 80, 81, 121; 51/164; 259/48; 241/171, 176; 233/25

[56] **References Cited**

UNITED STATES PATENTS

895,173	8/1908	Ecaulbert	51/164 UX
2,822,127	2/1958	Sinn	233/25 X
2,923,104	2/1960	Olson	51/164

FOREIGN PATENTS OR APPLICATIONS

231,338	7/1969	U.S.S.R.	51/164

Primary Examiner—Harold D. Whitehead

Attorney, Agent, or Firm—Wenderoth, Lind & Ponack

[57] **ABSTRACT**

This invention relates to a centrifugal barrel finishing apparatus having tiltable tubs, the apparatus including a means for moving the covers for tubs up and down, a means for tilting all tubs to an angle to allow an automatic discharge of the finished workpieces and abrasive media, a means for charging a given quantity of mass including workpieces and abrasive media and a means for separating the mass into workpieces and media, so that all these operations are automatically performed in an improved manner.

12 Claims, 16 Drawing Figures

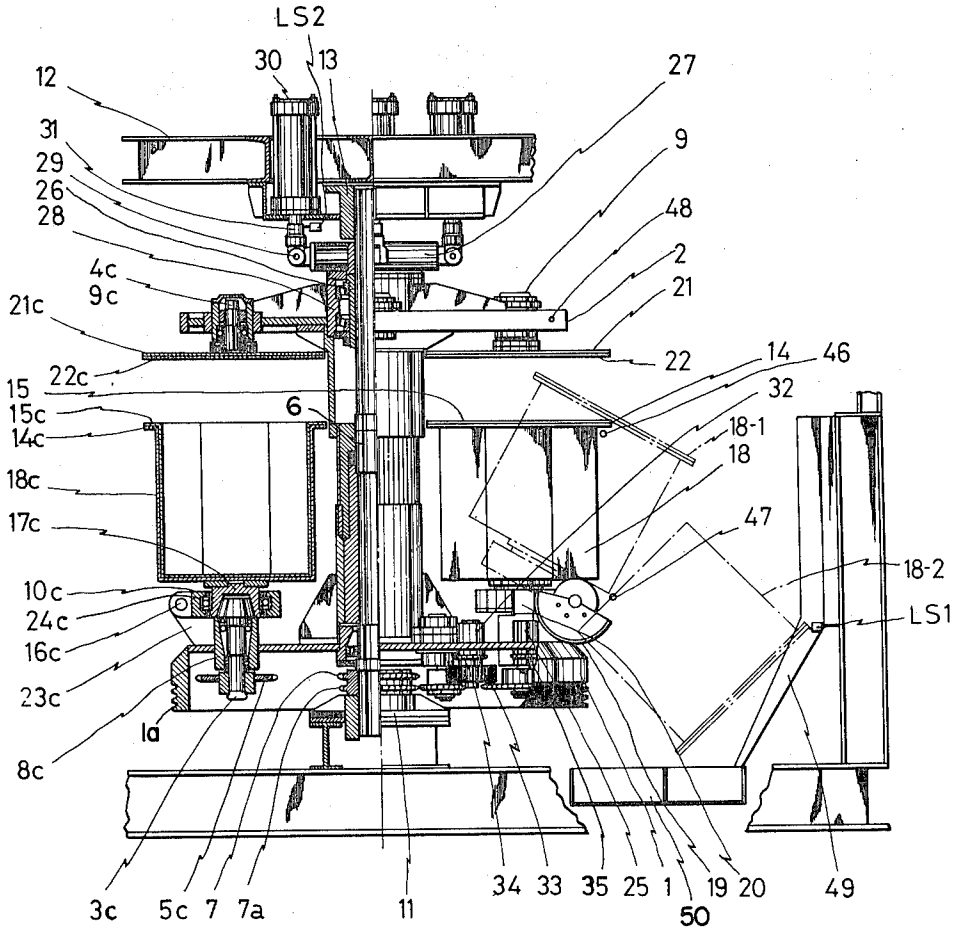

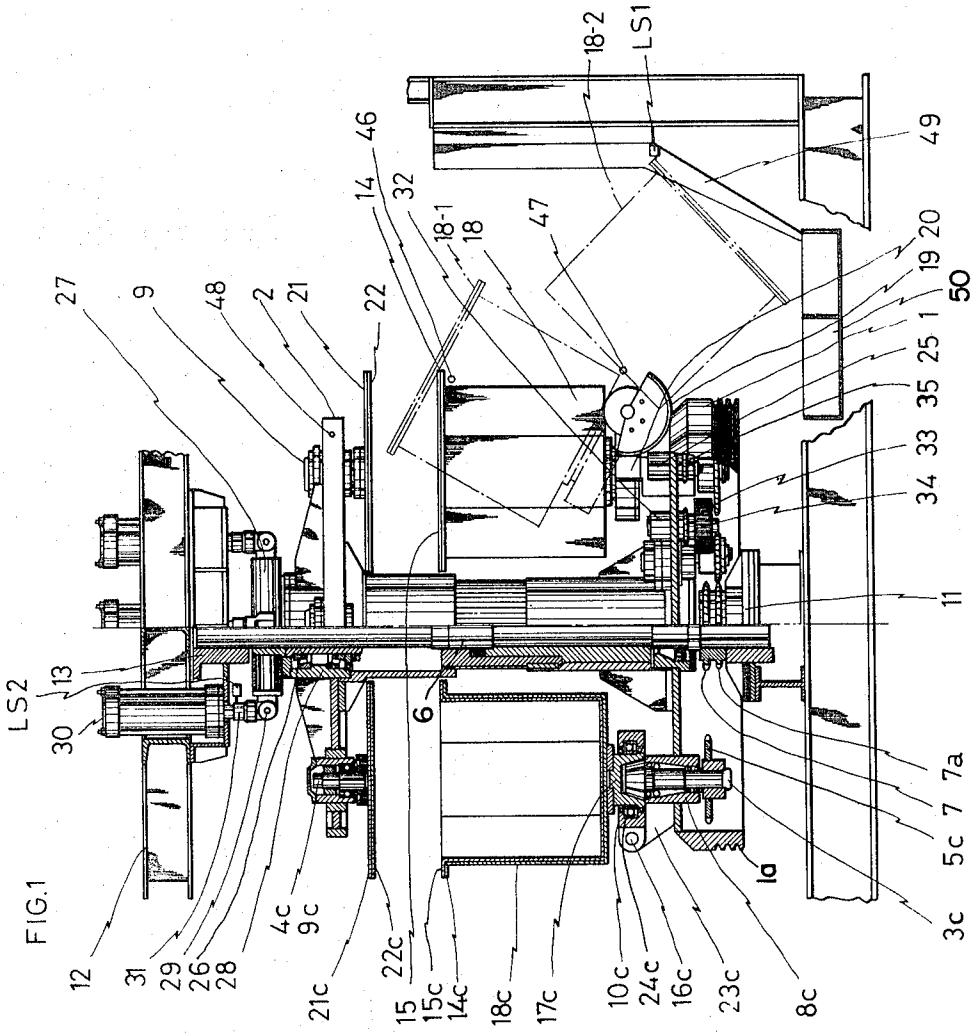
LS2
13
30
27
9
48
2
21
22
46
14
32
18-1
18
47
18-2
LS1
49
20
19
50
1
25
35
33
34
11
6
7a
7
5c
3c
1a
8c
23c
16c
24c
10c
17c
18c
14c
15c
15
22c
21c
4c
9c
28
26
29
31
12

FIG.1

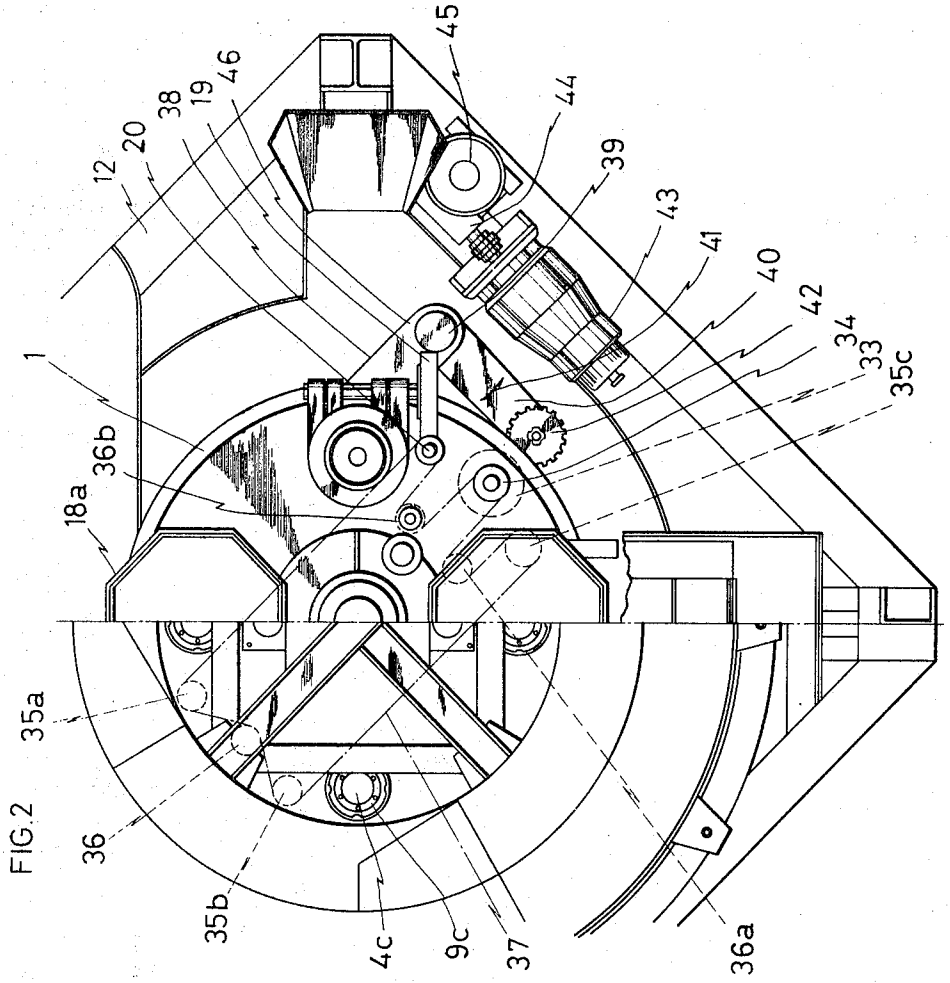
12
20
38
19
46
45
44
39
43
41
40
42
34
33
35c
1
36b
18a
35a
36
35b
4c
9c
37
36a

FIG. 2

FIG.3

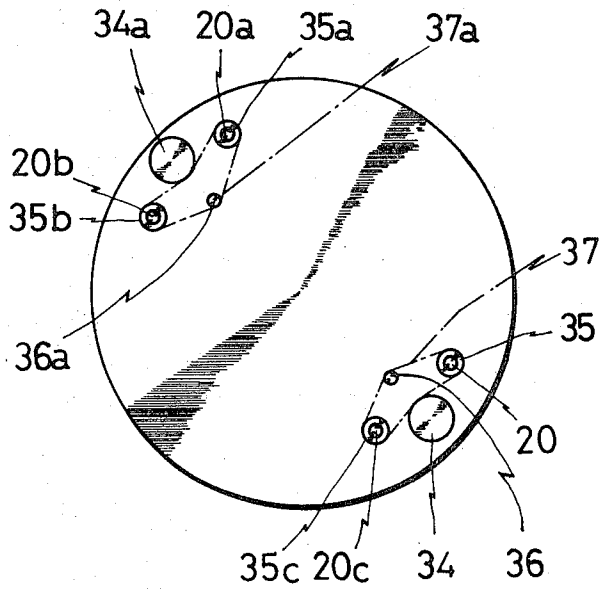
34a
20a
35a
37a
20b
35b
37
35
36a
20
35c
20c
34
36

FIG. 4

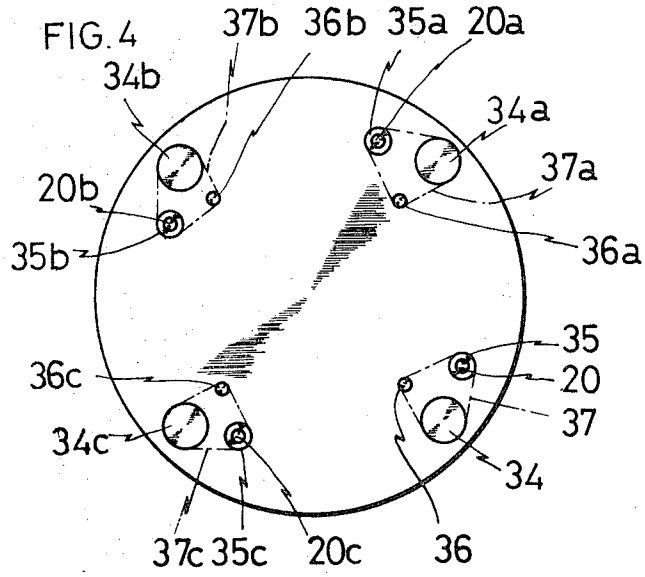
37b
36b
35a
20a
34b
34a
37a
20b
35b
36a
35
36c
20
37
34c
34
37c
35c
20c
36

FIG.5

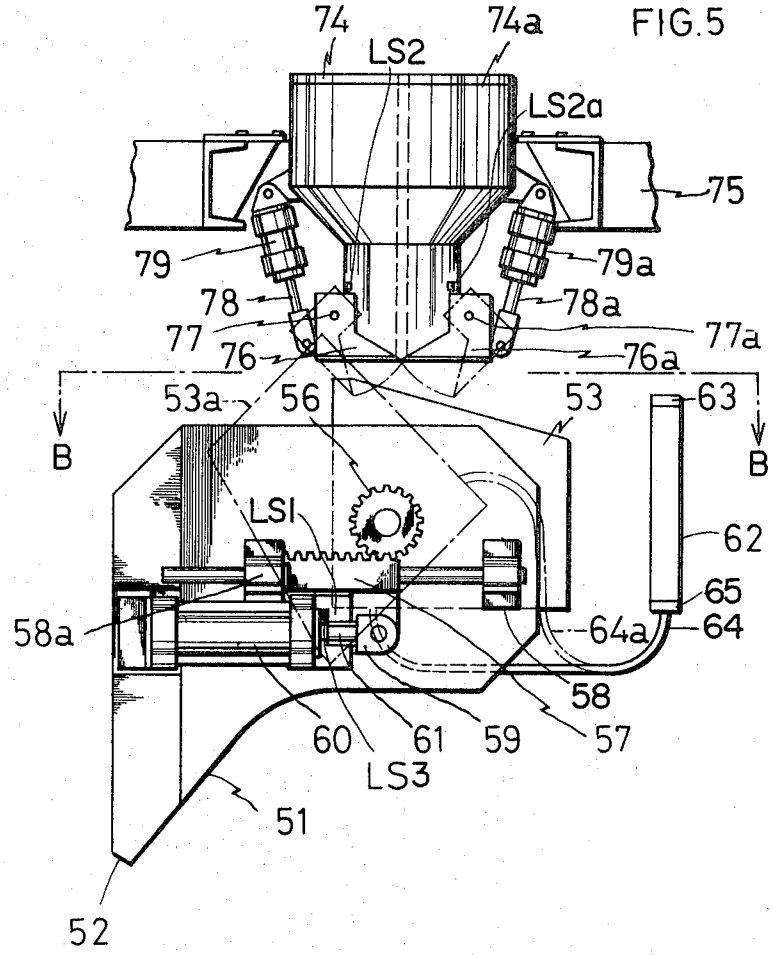
74
74a
LS2
LS2a
75
79
79a
78
78a
77
77a
76
76a
53a
56
53
63
B
B
LSI
62
65
58a
64a
64
58
60
61
59
57
LS3
51
52

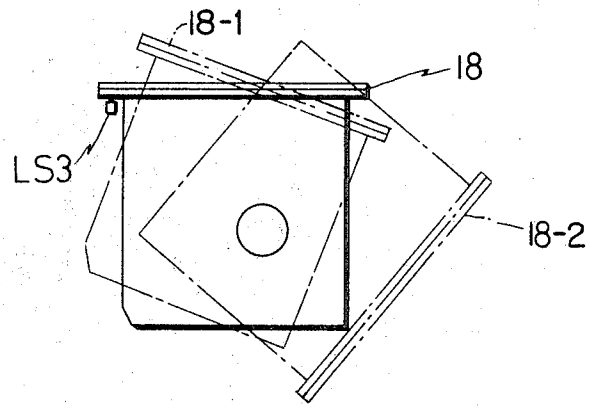
18-1
18
LS3
18-2

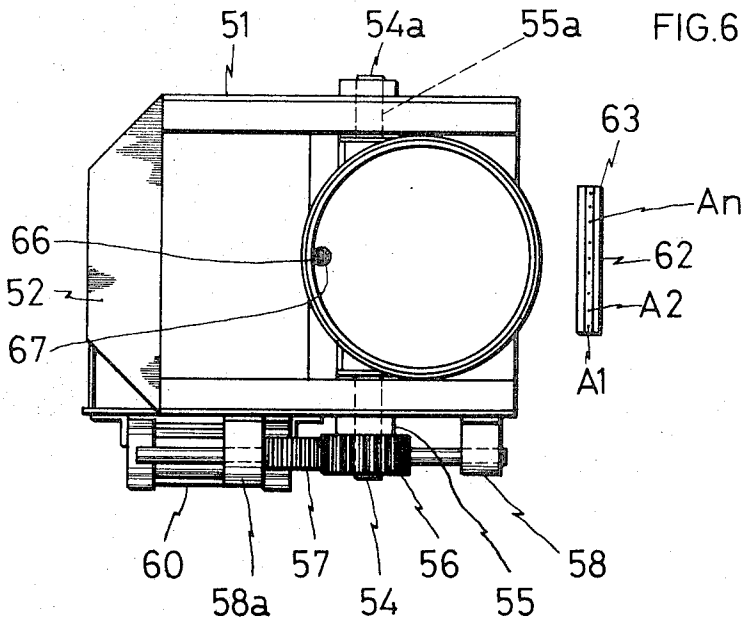
51
54a
55a
63
An
62
A2
A1
66
52
67
60
58a
57
54
56
55
58

FIG.6

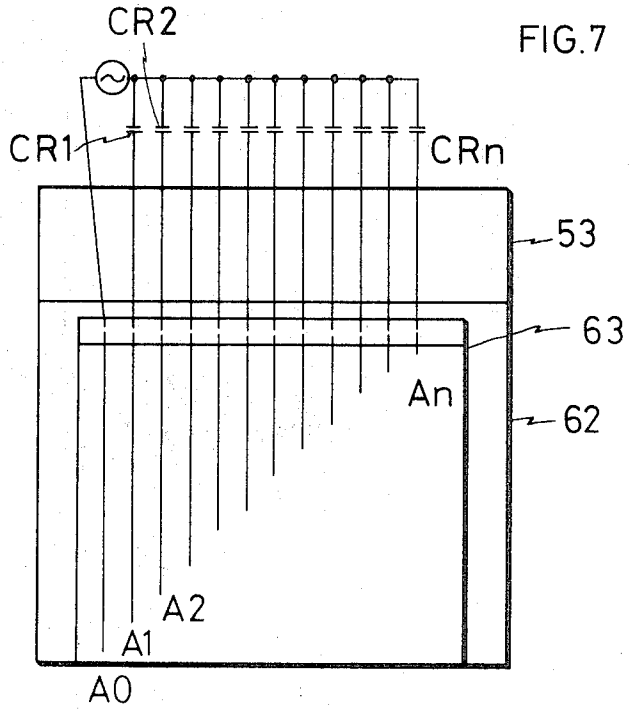
CR2
CR1
CRn
53
63
An
62
A2
A1
A0

FIG.7

FIG. 8

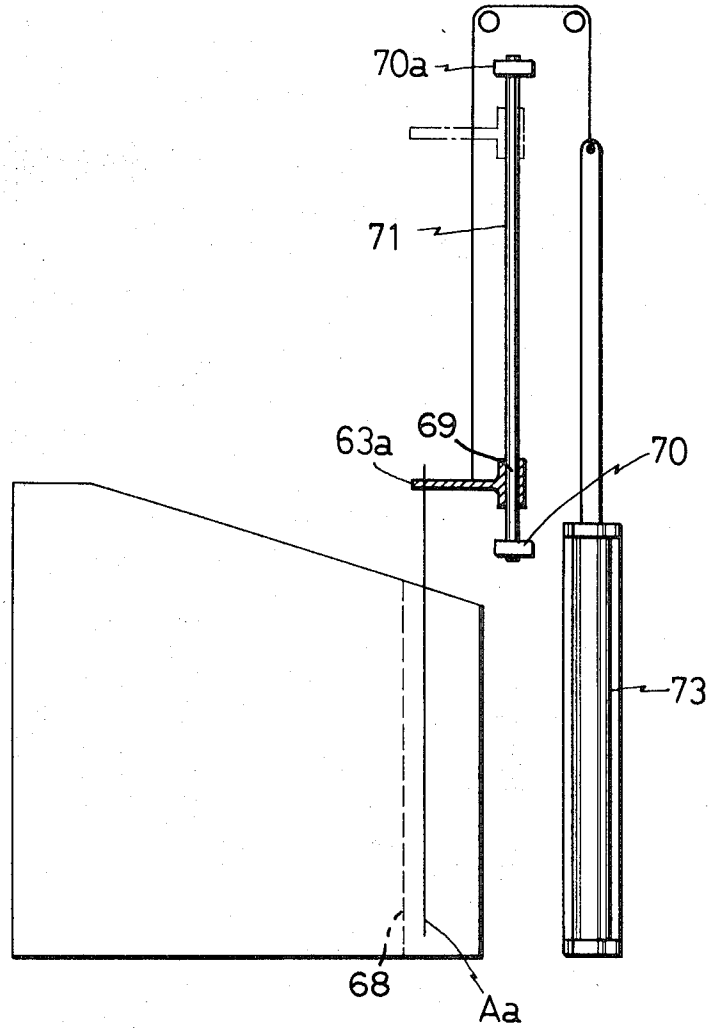

FIG.9

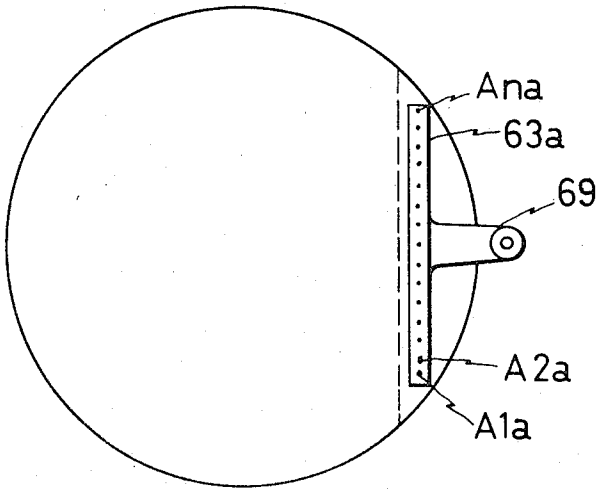

FIG.10

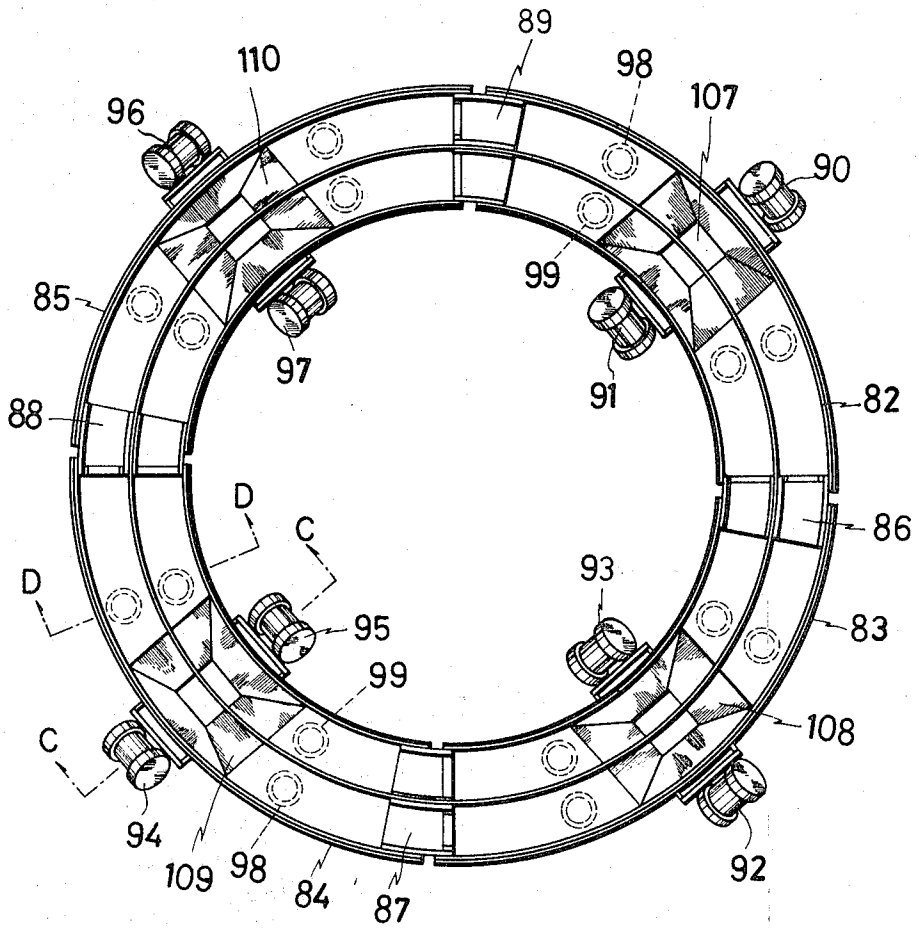
89
110
98
107
96
90
99
85
97
91
82
88
D
C
86
93
D
95
83
99
108
C
94
109
98
84
87
92

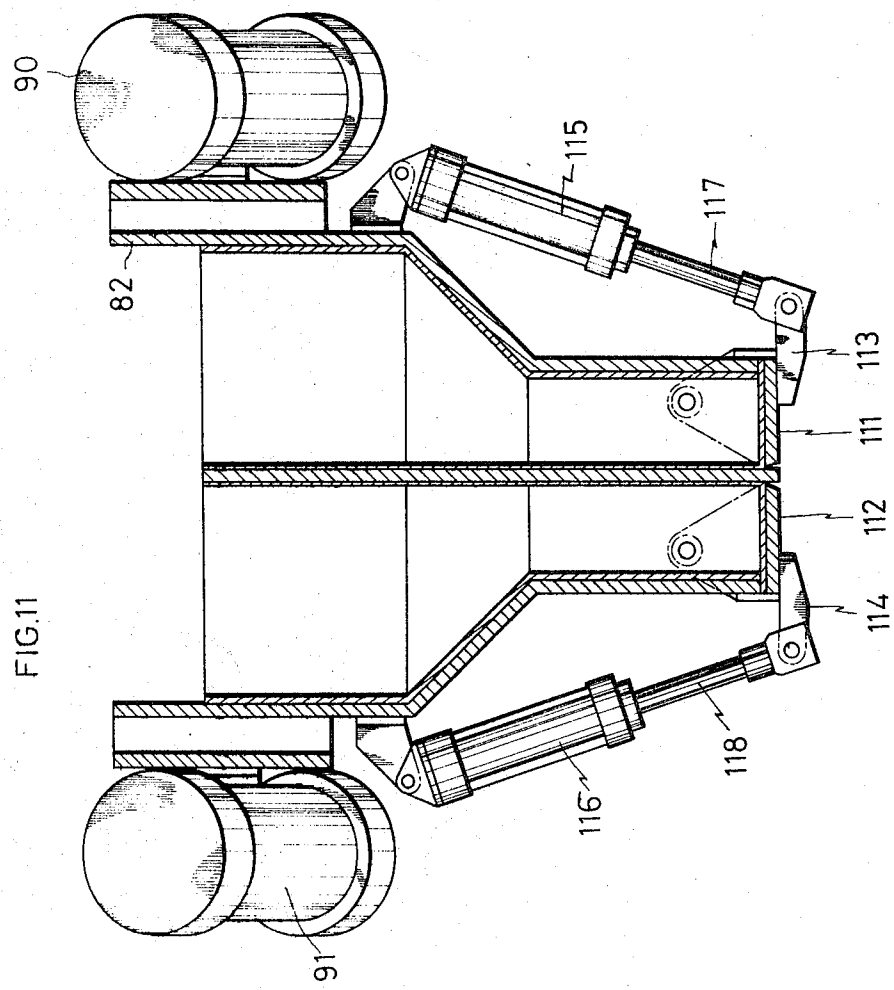

FIG.11

FIG.12

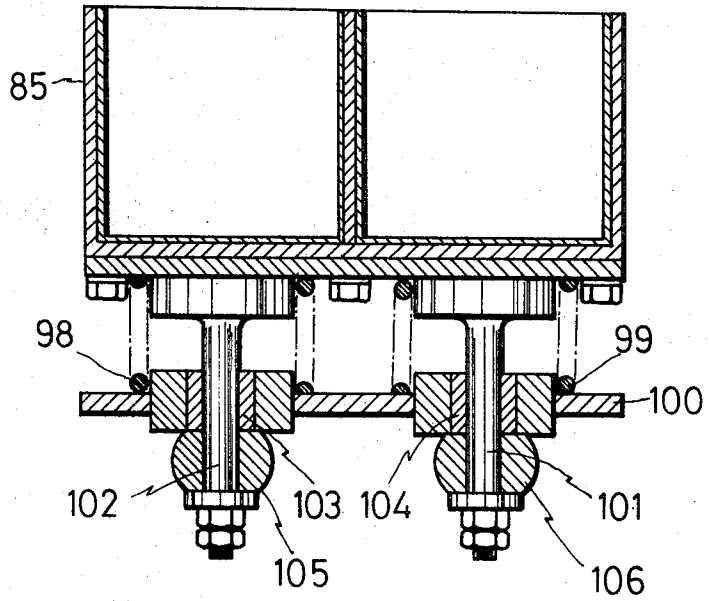

FIG.14

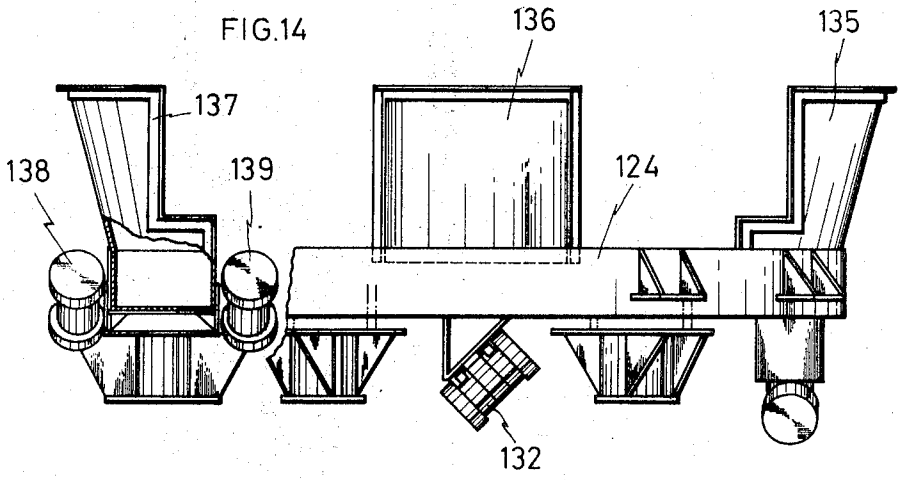

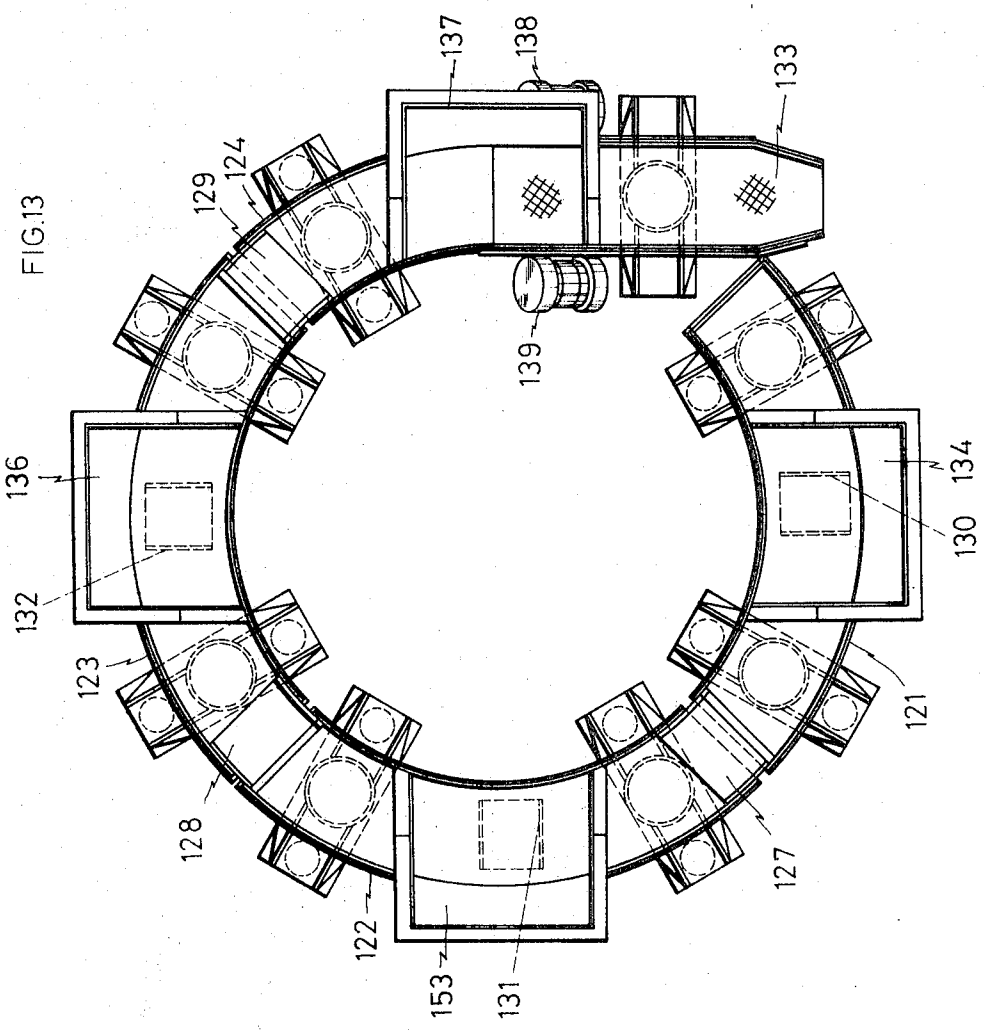
137
138
133
129
124
139
136
134
132
130
123
121
128
127
122
153
131

FIG.13

FIG.15

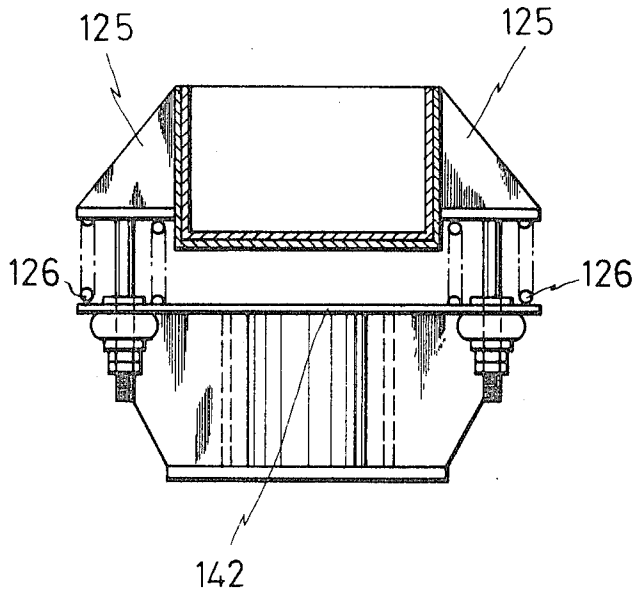

FIG.16

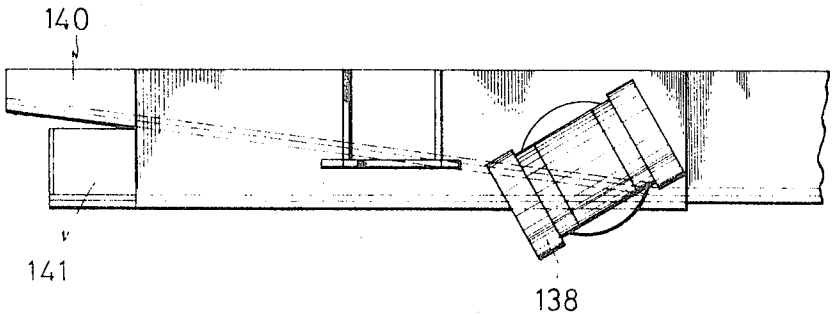

CENTRIFUGAL BARREL FINISHING APPARATUS HAVING TILTABLE TUBS

BACKGROUND OF THE INVENTION

This invention relates to a centrifugal barrel finishing apparatus with tiltable tubs having covers automatically moved up and down, said tubs being automatically tilted simultaneously or separately to discharge the mass with an improved efficiency, and having a means for separating the mass into workpieces and media and a means for charging a given quantity of mass into the tubs.

All types of conventional apparatus have a number of tubs rotatably mounted on a pair of turrets rotating at high speeds to cause the tubs to revolve. The masses in the rotating tubs are processed with a good efficiency, receiving several or some 10 times as great centrifugal force as the gravity which would normally act thereon. However, this presents a problem as to the manual labor and time consumption in the operations for charging and discharging the mass.

In order to solve this problem, some automated operations have been performed. In an apparatus disclosed in prior U.S. application Ser. No. 231,874, filed Mar. 6, 1972, the operations such as movement of tub covers, tilting and returning of tubs and charging of mass are automated but performed on a one-tub at a time basis, and when these operations have been completed for one tub, the turret is caused to rotate by a given angle to place a second tub in the position for discharging and charging the mass. This has really reduced the manual labor, but there is still a problem in saving time.

In this invention, a splined shaft is used as a means of connecting the tub to the driving system. In this way, when the tub is caused to turn toward the mass discharging side, then it is brought out of engagement with the driving system by means of the splined shaft, and is brought into engagement with the same on turning to its upright position. This simplifies the structure of the apparatus, thus increasing the working capacity of all tubs.

Furthermore, it provides advantages over all prior apparatus in that tub covers are moved up and down simultaneously and tubs can be caused to tilt simultaneously or separately in charging and discharging the mass.

Conventional vibratory separating means are usually installed in a straight line so as to transport the mass to a separating apparatus, and the mass discharging operations are performed when tubs are stopped in a given position.

However, this invention provides an annular transport and separating means enabling the mass discharging operations to be performed with all tubs simultaneously.

There are two methods of weighing the mass to be finished, one being that workpieces and abrasive media are automatically weighed, and the other being that a weighing instrument is used to charge a given quantity of mass. These methods present disadvantages in that sophisticated instruments must be used and workpieces must previously be weighed in a block, thus causing workpieces to get damaged when during or after weighing.

In this invention, workpieces and media are alternately charged bit by bit into the tubs so that there occur no such damages.

Feeding of the mass is by the use of an annular feeding means, by which it is possible to feed mass into the tubs simultaneously.

BRIEF SUMMARY OF THE INVENTION

According to the invention, the lower turret is provided with a pulley connected by way of a chain or belt to the main drive motor, and the upper turret is placed at a given interval above the lower turret, said lower and upper turrets being fixed on the main shaft. Both ends of the main shaft are rotatably supported on lower and upper bearings fixed on the upper and lower frames, the lower end of said main shaft having a sprocket wheel or pulley freely supported and fixed on the lower bearings.

The main shaft and the turrets are fixed by the use of a key or the like. The same number of bearings as tubs are mounted across the upper and lower turrets. The lower shaft is rotatably supported on the bearing of the lower turret, the lower end of said shaft having a sprocket wheel or pulley across that of the main shaft and driven by chains or belts. In this way, the axial rotation of the lower shaft is caused by the orbital revolution of the lower turret. The upper end of the lower shaft is axially splined to provide a curved profile. Supporting arms are fixed on the lower turret, said supporting arms being rotatably supported on bearings, and the shafts for tubs are rotatably supported on said bearings.

The lower end of the tub shaft is also splined to provide a concave profile which is capable of joining or separating from the corresponding upper end of the lower shaft and is provided with a driving system to tilt the tubs in the supporting arms. The bottom of the upper turret has covers for the tubs rotatably mounted across the tubs, and is provided with a means for moving the upper turret up and down in relation to the lower turret.

With the apparatus of the invention, the upper turret is moved upwardly and the rotation of the supporting arms is caused by the driving system, and a tub is caused to tilt on its shaft to discharge mass automatically. When the tub turns in the opposite direction toward its upright position, a charge of mass with unfinished workpieces is automatically fed into it.

In this invention, one annular transport and separating means is used to separate the mass discharged from all tubs simultaneously. By this means, it is possible, on the one hand, to recharge the separated media into tubs while selecting the finished workpieces, on the other. An annular mass feeding means is also used to feed mass into all tubs simultaneously or separately. Weighing of workpieces and media is made by the use of a water gauge which measures water levels produced by workpieces and media thrown into water. A given quantity of mass is thus measured and fed into the tubs

BRIEF DESCRIPTION OF THE ACCOMPANYING DRAWINGS

FIG. 1 is a front view, partly in section, of one portion of the finishing apparatus of the invention.

FIG. 2 is a partial plan view of the apparatus of FIG. 1.

FIG. 3 is a plan view of a driving system for tilting every tub two at a time.

FIG. 4 is a plan view of a driving system for tilting tubs one by one.

FIG. 5 is a front view of a mass weighing instrument.

FIG. 6 is a plan view of the instrument of FIG. 5, taken along the line B—B of FIG. 5.

FIG. 7 is a water gauge and a circuit diagram thereof.

FIG. 8 is another water gauge and the circuit diagram thereof.

FIG. 9 is a plan view of the gauge of FIG. 8.

FIG. 10 is a plan view of a mass feeding equipment.

FIG. 11 is an enlarged sectional view of the equipment of FIG. 10 taken along the line C—C of FIG. 10.

FIG. 12 is an enlarged sectional view of the equipment of FIG. 10 taken along the line D–C of FIG. 10.

FIG. 13 is a plan view of a mass transport and separating apparatus.

FIG. 14 is a side view of the apparatus of FIG. 13.

FIG. 15 is an enlarged sectional view of a portion of the apparatus of FIG. 13.

FIG. 16 is an enlarged side view of the apparatus of FIG. 13.

DETAILED DESCRIPTION OF THE INVENTION

The finishing apparatus of the invention is provided with tiltable tubs axially rotating during the orbital revolution of the turrets, incorporating a means for moving the covers for tubs up and down and a means for tilting tubs to such an angle as to allow an automatic discharge of mass. With this apparatus having this simple construction, it is possible to carry out automatic mass charging and discharging operations without any decrease of the working capacity of the tubs. Labor saving and higher finishing efficiency have thus been realized.

Now, the finishing apparatus of the invention will be further described, by way of examples only, by reference to the accompanying drawings.

In FIGS. **1** and **2**, a lower turret **1** is provided having integral therewith a pulley **1***a* which connects by way of a belt or chain to a high speed main motor (not shown in the figure). The the motor must be capable of being operated at two velocities, i.e., finishing and inching. An upper turret **2** is positioned above the lower turret **1**. A main shaft **6** is passed through the lower and upper turrets **1** and **2**. The lower part of the main shaft **6** is rotatably supported on a lower bearing **11** which is mounted on the lower part of a housing **12**. The same number of sprocket wheels or pulleys **7**, **7***a*, **7***b*, **7***c* as there are tubs, or one half the number thereof, are fixed on the bearing **11**, rotating with the main shaft **6**. An example of one half number is shown in the figure.

The upper end of the main shaft **6** is rotatably supported on an upper bearing **13** which is fixed on the upper part of the housing **12**. The main shaft **6** and the turret **1** are fixed to each other by means of a key or the like. The same number of bearings as tubs are mounted around the upper and lower turrets, respectively. The number of tubs is arbitrary, and a finishing apparatus having four tubs, for example, will be described hereinafter.

Four bearings **8**, **8***a*, **8***b*, **8***c* are mounted on the lower turret **1** to permit rotation of the lower shafts **3**, **3***a*, **3***b*, **3***c* therein respectively. Sprocket wheels or pulleys **5**, **5***a*, **5***b*, **5***c* are mounted on the lower ends of the respective lower shafts **3**, **3***a*, **3***b*, **3***c*, being connected by way of the chains or belts to the corresponding sprocket wheels or pulleys **7**, **7***a*. The upper ends of the lower shafts **3**, **3***a*, **3***b*, **3***c* are axially splined and are in the shape of a truncated cone. The tub shafts **17**, **17***a*, **17***b*, **17***c* are mounted on the lower ends of the respective tubs **18**, **18***a*, **18***b*, **18***c*, the lower ends of said shafts each having a splined truncated conical recess therein which engages with the splined upper end of the corresponding lower shafts **3**, **3***a*, **3***b*, **3***c*. Supporting arms **23**, **23***a*, **23***b*, **23***c* are fixed on the lower turret **1** by, the respective arms of a bolt or by welding means, having shafts **16**, **16***a*, **16***b*, **16***c* rotatably mounted on the upper end thereof to allow bearing mounts **10**, **10***a*, **10***b*, **10***c* to rotate with the shafts. The bearing mounts **10**, **10***a*, **10***b*, **10***c* have ball bearings **24**, **24***a*, **24***b*, **24***c* at the center thereof, said ball bearings supporting the tub shafts **17**, **17***a*, **17***b*, **17***c* on the inner race thereof.

The shafts **16**, **16***a*, **16***b*, **16***c* have worm wheels **19**, **19***a*, **19***b*, **19***c* fixed at one end thereof, said worm wheels engaging with worm screws **20**, **20***a*, **20***b*, **20***c*. The shafts **25**, **25***a*, **25***b*, **25***c*, of the worm screws extend through the lower turret **1**. Sprocket wheels **35**, **35***a*, **35***b*, **35***c* are mounted on the lower part of the lower turret **1**.

The truncated conical ends of the splined shafts **3**, **3***a*, **3***b*, **3***c* are so formed as to bring tubs into engagement or out of engagement with the driving system when tubs are tilting or returning around the shafts **24**.

The tubs **18**, **18***a*, **18***b*, **18***c* have an opening at the top, having a cylindrical, polygonal or any other shape. For polishing purposes in particular, a pentagonal or octagonal tub is more convenient since it, when it orbital motion, causes a flow layer on the surface of the mass.

The tubs have flanges **14**, **14***a*, **14***b*, **14***c* around the opening, said flanges having packings **15**, **15***a*, **15***b*, **15***c* thereon. Tub covers **21**, **21***a*, **21***b*, **21***c* are so mounted as to be placed on the flanges when the tubs are upright. The covers are also provided with packings **22**, **22***a*, **22***b*, **22***c* on the lower surfaces thereof, which keep the tubs sealed in cooperation with the flange packings. The upper shafts **4**, **4***a*, **4***b*, **4***c* are mounted on the top of the covers, and are rotatably supported on the upper bearings **9**, **9***a*, **9***b*, **9***c* which are fixed on the upper turret **2**.

An outer race **28** for the upper turret is fixed by welding means or the like on a portion through which the main shaft for the turret **2** is passed. The mounting of the outer race **28** is means of of a spherical thrust roller bearing as shown in the figure so that the outer race **28** can be rotated relative to a slider **26** for moving tub covers and can be slid along the main shaft **6** with the slider **26**. The slider **26** is so mounted as to rotate and slide relative to the main shaft **6**.

The slider **26** has two or four arms **27**, **27***a*, **27***b*, **27***c* at the top (four arms being shown), the free ends of said arms being connected by means of pins **29**, **29***a*, **29***b*, **29***c* to the heads of the piston rods **31**, **31***a*, **31***b*,

31c of cylinders 30, 30a, 30b, 30c for moving the tub covers. The cylinders which are mounted on the housing 12 are operated by a hydraulic or pneumatic means.

The lower turret 1 is provided with another bearing 32 on which a shaft is rotatably supported which has a pinion 33 at the lower end. The shaft has a sprocket wheel 34 fixed centrally thereof. The sprocket wheel 34 is placed on a level with the worm wheels 25, 25a, 25b, 25c and is connected by way of a chain 37 to the intermediate sprocket wheels 36, 36a, 36b, 36c as shown in FIG. 2.

In FIG. 2, one pinion 33 drives the worm shafts 25, 25a, 25b, 25c to rotate them simultaneously. In FIG. 3, two pinions are provided so that one pinion 33 may impart its rotation to the worm shafts 20, 20c whereas the other pinion 33 rotates the worm shafts 20a, 20b. In FIG. 4, four pinions 33 are provided near the worm shafts 20, 20a, 20b, 20c so as to impart their respective rotation thereto.

A supporting arm 38 for a driving system is mounted on the bottom of the housing 12 as shown in FIG. 2, said arm 38 having a supporting arm 40 rotatably mounted on a shaft 39 thereon. The supporting arm 40 has a rotatable pinion 42 at the free end, oscillating as indicated by an arrow 41 under hydraulic or pneumatic pressure. In the position as shown in FIG. 2 the pinions 33 and 42 are brought into engagement. When the pinions 33 and 42 are moved out of engagement, the lower turret 1 can rotate independently of the pinion 42.

The pinion 42 has a driving system, in which a drive motor, such as an electric motor 43 drives a pulley 45 to rotate it through of reduction gears 44, said pulley 45 and a pulley connected to the shaft 39 than imparting rotation to the pinion 42 by way of a belt or chain.

In order to detect positions where tubs are placed, holes 47 and 48 for detecting by photocell are provided at a right angle to the drawing. A projector and a photoelectric switch are mounted on the housing 12. In this way, it is possible to detect the position where tubs are to be stopped.

By this structure of the apparatus as described above, when the lower turret 1 begins to rotate, it causes the main shaft 6 to rotate, and then the tubs are also caused to revolve in an orbital motion around the main shaft 6. At this moment, the main shaft 6 is rotating inside the slider 26 while the cylinder 30 for moving tub covers, the slider 26 and supporting arm 27 remain stationary. The outer race 28 is rotating about the bearing with the orbital motion of the tub 18 and the axial rotation of the turret 2 while the slider 26 remains stationary.

A chute 49 and an annular separating means 50 are provided for the tubs, said separating means 50 surrounding the lower turret 1.

The axial rotation of the tubs 18, 18a, 18b, 18c is caused by the sprocket wheels or pulleys 7, 7a and lower shafts 3, 3a, 3b, 3c which are interconnected by the chain or belt. The lower shafts 3, 3a, 3b, 3c are rotating inside the lower bearings 8, 8a, 8b, 8c and the shafts 17, 17a, 17b, 17c are rotating inside the bearings 10, 10a, 10b, 10c by means of the splined shafts provided on the upper end of the lower shaft. The upper shafts 4, 4a, 4b, 4c are rotating inside the upper bearings 9, 9a, 9b, 9c while the tub covers 21, 21a, 21b, 21c remain stationary on the tubs 17, 17a, 17b, 17c.

Now, the operations of the finishing apparatus will be explained by referring to the structure described heretofore.

After a predetermined finishing period of time, a timer works to switch the motor to turn slowly, then moving the turret to the tub tilting position. There are two methods of stopping the turret in position; one is that a cutout is provided around the lower turret 1 so that a roller is thereby locked; and the other is that as shown in FIG. 1, a through hole 48 is provided on the upper turret 2 through which a beam of light is passed at a right angle to the drawing when a tub cover is placed in an open or closed position, and a photoelectric switch acts to stop the motor when the turret is placed correctly in a predetermined position. When the turret has stopped, a valve is operated automatically by signal or manually to introduce pneumatic air or hydraulic oil into the piston rod sides of the cylinders 30, 30a, 30b, 30c, so that tub covers move upwardly as the piston rods moving up to the position as shown in FIG. 1.

Movement of the lever 40 at this moment brings the pinions 33 and 42 into engagement. When the motor 43 is then started, it causes the chain to move, followed by rotation of the sprocket wheels 35, 35a, 35b, 35c which cause the worm wheels 19, 19a, 19b, 19c to rotate by way of the worm screws 25, 25a, 25b, 25c. With worm wheel shafts 16, 16a, 16b, 16c and the bearings 10, 10a, 10b, 10c firmly connected, the bearings are rotated clockwise in the case of the right-hand tub in FIG. 1, so that the splined shafts are disconnected and the tub is caused to tilt toward a position 18-2. When the tub turns downwards, the mass is discharged out of the tub. This position can be detected by a light switch LS_1 provided on the chute 49, and the motor 43 is then stopped by a relay and caused to turn reversely. All tubs can be caused to tilt simultaneously or separately. The mass is discharged through the chute 49 into the annular separating means 50 where the mass separation is performed.

When it is necessary to feed a given quantity of workpieces to be finished during reversal of the motor, the motor may be stopped when the tub reaches the position 18-1.

When feeding of the charge is completed, the motor is started again to bring the tub to its upright position and join the upper and lower splined shafts. This upright position can be detected by the use of the photocell. If a beam of light extending at a right angle to the drawing passes through both holes 46, 48 in FIG. 1, it means that the tub has been placed correctly in its upright position.

There has been described the situation in which all four tubs are tilting simultaneously. FIG. 3 shows a drive system for tilting two tubs at a time. For tilting two tubs at a time, two pinions 33 and associated parts such as worm shafts 20 and 20c, 20a and 20b, and chains 37 and 37a etc. are provided so that tubs 18, 18c are first caused to tilt and tubs 18a, 18b are then caused to tilt.

For tilting each tub separately, four pinions 33, are provided near the corresponding worm shafts 20, 20a, 20b, 20c as indicated in FIG. 4, so that tubs may be caused to tilt one by one to exchange the mass.

The embodiments of FIGS. 3 and 4 have advantages when one tub is so large that the separating apparatus is not sufficient to receive at one time the mass from all

tubs. In either case, on completion of the discharging and charging operations and with the tubs in upright positions, a signal is sent out to remove air pressure from the piston rod side of the cylinders **30** and boost air pressure in the piston side (upper side) so that the covers **21–21***c* are moved downwardly to seal the tubs. Whether or not the tubs have been securely sealed can be detected by the limit switch LS_2 which is installed on the end of one piston rod **31**, said limit switch LS_2, if the tub has been sealed correctly, sending out a signal to act on a relay which drives the main motor to rotate the tubs. Other subsequent operations are performed in the same manner as described earlier.

Weighing and preparing of mass is automatically carried out by the measuring instrument of FIG. **5**. A chute **51** is provided inside a housing (not shown) above the tubs. An opening **52** of the chute **51** comes opposite the opening of a tub **18** when the tub is ready to receive a mass. There is a mass measuring box **53** inside the chute **51**, in which a given amount of mass is stored. This box **53** has shafts **54** and **54***a* rotatably supported on bearings **55** and **55***a* on the chute **51**. The shaft **54** has a pinion **56** at the end, said pinion **56** engaging with a rack **57** both ends of which are rotatably supported on bearings **58** and **58***a* on the chute **51**. The rack **57** has a crank **59** on the lower side, said crank **57** being connected to one end of the piston rod **61** of the cylinder **60**. The cylinder **60** is fixed on the chute **51**. A mass measuring pipe **62** which is placed near the box **52** is **65** to the housing. A connector **65** at the lower end of the pipe **62** and a connector **66** at the lower end of the box **52** are inter-connected by means of a rubber or vinyl hose **64**. The upper end of the connector **66** is covered with a metallic net **67** which prevents abrasive media or other solid substances from entering the hose **64**. The connector **66** may be placed in any position of the lower end of the pipe **62**, but should preferably be placed in such a position as to minimize the strains on the hose **64**, when the box **53** is turning toward a position **53***a* in which case the hose is shown in position **64***a*.

A water gauge is provided inside the pipe **62**. This gauge may be a float type having contacts or an electric-contact type as indicated in FIG. **7**.

When an electric-contact type is used, an electrically insulated cover **63** is provided on the pipe **62**, having contacts A_0, A_1, A_2 . . . . Intervals of the level of the bottom ends these contacts make possible the mass measuring, which will be described hereinafter.

Instead of the measuring pipe **62**, a measuring instrument may be provided at one corner of the measuring box which is separated by a metallic net **68** as shown in FIG. **8**. In this instance, an electrically insulated cover **63***a* is provided with a sleeve **69** sliding on the shaft **71** supported on the bearings **70** and **70***a* in the housing.

The outer race **69** is provided with a wire **72** which, with the aid of the cylinder **73**, pulls the water gauge back to a position in which turning of the measuring box is not obstructed by the gauge.

Now, the functions of the contacts A_0, A_1, A_2 . . . will be explained, as follows.

A given voltage is applied between A_0 and A_1, A_0 and A_2 . . . , respectively, where A_0 is a base contact, as indicated in FIG. **7**.

No electric current flows between these contacts when water is not present in the measuring box. When water is present, for example, to a level A_1, electric current flows between A_0 and A_1 to operate a relay circuit CR_1. A given amount of workpieces or abrasive media being fed into the box, the water level rises and the water gauge measures the cubic volume of the mass accordingly.

A desired quantity of workpieces or media can be determined and charged in a predetermined sequence by the use of a signal from the measuring box.

A mass feeding means is provided on top of the measuring box. This means is mounted on the housing or another frame, feeding workpieces to one portion of a tub and abrasive media to the other portion.

At the bottom of the tub, there are covers **76** and **76***a* rotating about the shafts **77** and **77***a* and said covers **76**, **76***a* having piston rods **78** and **78***a* of cylinders **79** and **79***a* rotatably connected to the lateral side thereof.

Now, the functions of the measuring instrument will be described. When the measuring box **53** returns to its upright position after discharging a mass, the crank **59** acts on the limit switch LS_3 to actuate it, and then a relay functions to feed desired quantities of water and compound solution into the box **53**. A known float valve distributor may be used or an electromagnetic valve may be used for this purpose. In the latter instance, the limit switch LS_3 acts on the relay to open the electromagnetic valve, and when the water gauge indicates a certain level of water, i.e., when an electric current flows between A_0 and A_1, the relay CR_1 functions to close the valve.

When feeding of water has been completed, the timer or the relay CR_1 works to apply air pressure into one side of the cylinder **79** or **79***a* to open the cover **76** or **76***a* and feed workpieces or media.

When workpieces or media are fed into the measuring box, the water level rises and the contacts A_0, A_2 form a circuit as predetermined to act on the relay CR_2 to introduce air pressure to the other side of the cylinder, then closing the cover and stopping the mass feeding.

When the cover is closed, the limit switch LS_2 or LS_{2a} operates to open the other cover. In this manner, desired quantities of workpieces and media are fed into the measuring box **53**. Workpieces and media may be fed separately. However, it is rather desirable that workpieces alone should not be fed in order to prevent damage due to impact thereof. Feeding of both workpieces and mass simultaneously is possible in various methods by controlling the electric circuit. One method, for example, is that the covers **76** and **76***a* are opened simultaneously, the opening being regulated by strokes of the piston rods **78** and **78***a* beforehand to control the ratio of workpieces and media to be fed and to close the covers when a desired water level is reached. A second method is that both covers **76** and **76***a* are kept open till the relay CR_2 starts, and one of the covers (usually the cover for workpieces) is closed when the relay CR_2 functions while the other remains open to feed the mass till the relay CR_3 starts to function.

A third is that workpieces and media are alternately fed bit by bit into the measuring box.

Whatever method may be chosen, given quantities of workpieces and media are kept in store in the measuring box **53**. Compound solution may be fed into the box through the feeding unit or in solid form or directly fed into tubs.

When the tub stops to discharge mass, and is caused to tilt back to a position **18-1**, pneumatic pressure is introduced into one side of the cylinder **60**, then the rack **57** and the pinion **56** cause the measuring box to turn toward the position **53***a* in FIG. **5**. From this position **53***a*, a given quantity of mass is fed through the chute **51** and its opening **53** into the tub **18-1**.

In a given period of time after the box has taken the position **53***a*, the timer starts to function so as to introduce air pressure into the other side of the cylinder **60** and return the box to its original position. Other operations will follow in the same manner as described earlier.

The instrument of FIG. **5** discussed previously is used to feed mass into all tubs from one position, but it is possible to feed mass into all tubs simultaneously by using annular feeding equipment which will now be described.

In FIG. **10**, separate arch-like portions **82, 83, 84** and **85** having a rectangular or semi-circular section are combined into one circular or elliptic shape trough. These portions are joined by rubber or plastic joints **86, 87, 88** and **89**, each portion vibrating separately. This equipment may be built as one circular or elliptic trough.

In the embodiment of FIG. **10**, a double circular path is provided, one for workpieces and the other for abrasive media. This equipment may be used for feeding media alone, whereas workpieces may be fed through other feeding means. The lateral side of the trough is provided with vibration-generating motors **90, 91, 92, 93, 94, 95, 96** and **97** which cause the trough to vibrate and circulate mass therealong.

In FIG. **12**, this trough is resiliently mounted by springs **98** and **99** on a base **100**, and firmly supported on connecting rods **101** and **102**. The connecting rods **101** and **102** are provided with a hard rubber bushing **103** and **104** and a rubber cushion **105** and **106** absorbing shocks to the trough.

There are hoppers **107, 108, 109** and **110** over tubs as shown in FIG. **11**. The hoppers have openings at the bottom which are provided with covers **111** and **112**. The covers **111** and **112** are connected by way of links **113** and **114** to piston rods **117** and **118** of cylinders **115** and **116**, turning with movement of the piston rods **117** and **118**.

When tubs are ready to receive a mass, air pressure is introduced into the piston rod side of the cylinders **115** and **116** to move the covers to open them. Then workpieces and media are fed into the mass feeding apparatus, where workpieces and media are measured to desired quantities as described earlier, and fed into tubs. In this instance, when a definite volume of workpieces and media is fed into the mass feeding apparatus, a detecting device sends out a signal to introduce air pressure into the cylinders and move the covers to close them.

Now, the mass transport and separating equipment will be described by referring to the drawings.

In FIGS. **13** and **14**, **121, 122, 123** and **124** are vibratory feeders having a rectangular section, for example, particulars of which are shown in FIG. **15**.

The feeders are resiliently mounted by way of lateral plates **125, 125** and springs **126, 126** on a base **142**.

The inner wall of the feeder should be preferably covered with rubber material so as to prevent workpieces from being damaged. The feeders **121, 122, 123** and **124** are joined by rubber joints **127, 128** and **129**, each feeder vibrating independently of the others.

Vibration generating motors **130, 131** and **132** are provided, each causing the feeders to vibrate separately to transport a mixture of mass to a screen **133**.

Chutes **134, 135, 136** and **137** are provided to transport the discharged mass to the vibratory feeders. One feeder **124** is connected to the screen **133**. The screen **133** is caused to vibrate by a pair of motors **138** and **139**, separating the mass into workpieces and media. Workpieces are ejected through a port **140** whereas media are ejected through a port **141**.

This mass transport and separating equipment, by using an annular vibratory equipment, permits an automatic and simultaneous screening of the mass discharged from all tubs, particularly those of a vertical centrifugal barrel finishing apparatus. It thus reduces the manual labor, time and working area to a considerable extent. In the embodiment just described, the mass transporting path is divided into four sections, but this division is arbitrary. This path may be built in a single section. The vibration-generating motors may be placed centrally of the equipment.

Having thus been described, this invention provides a number of advantages, such as saving manual labor and time as well as economizing the working capacity of tubs.

In summary, this invention is characterized in that, in a centrifugal barrel finishing apparatus having a plurality of tubs, tubs are capable of tilting by means of the splined shafts. It is also characterized in that covers for tubs are moved up and down simultaneously, tilting or returning of tubs is performed simultaneously or separately, i.e., two tubs at a time or one by one, and feeding of mass is performed to all tubs simultaneously. In addition, the annular feeding equipment and the automatic measuring instrument permit an automatic operation for feeding mass and a simplified operation for recharging used media into tubs. The annular transport and separating equipment permits an automatic operation for opening all covers simultaneously and separating the finished workpieces and media.

These operations that have been described may be sequence-programmed or performed with hand-operated switches. These two methods are naturally within the technical scope of the present invention.

What is claimed:

1. A centrifugal barrel finishing apparatus comprising a lower turret rotatably mounted for rotation around a central axis, a plurality of tubs rotatably mounted on said lower turret around said central axis and rotatable around axes parallel to said central axis, drive means coupled to said lower turret for rotating said lower turret, tub drive means detachable coupled to said tubs for rotating said tubs, said tubs being pivotally mounted on said lower turret for pivotal movement outwardly of said central axis to a position in which the axes of the tubs are at more than 90° to the central axis, tub-pivoting means coupled to said tubs, an upper turret mounted above said lower turret and movable toward and away from said lower turret, tub covers on said upper turret in positions corresponding to the positions of said tubs on said lower turret and engageable with said tubs to close said tubs when said upper turret is moved toward said lower turret, and upper turret drive means coupled to said upper turret for moving said

upper turret toward and away from said lower turret.

2. A centrifugal barrel finishing apparatus as claimed in claim **1** in which said tub pivoting means comprises means coupled to the tubs for pivoting at least two of the tubs simultaneously.

3. A centrifugal barrel finishing apparatus as claimed in claim **1** in which said tub pivoting means comprises means coupled to the tubs for pivoting the tubs separately one at a time.

4. A centrifugal barrel finishing apparatus as claimed in claim **1** in which said tubs each have a tub shaft on which the tub is mounted, said lower turret having a plurality of tub drive shafts thereon, one for each tub, one shaft in each pair of a tub shaft and tub drive shaft having a splined portion on the end thereof toward the other shaft, and the other shaft having a splined recess in the end thereof toward the one shaft for receiving the splined portion on the end of the one shaft, whereby when a tub is pivoted, the splined portion moves freely out of and back into the recess for disconnecting the tub from the tub drive means.

5. A centrifugal barrel finishing apparatus as claimed in claim **1** in which said tubs each have a tub shaft on which the tub is mounted, a bearing in which said shaft is rotatably mounted and a pivotal mounting on said lower turret on which said bearing is pivotally mounted for pivoting movement of said tub on said lower turret.

6. A centrifugal barrel finishing apparatus as claimed in claim **1** in which said upper turret drive means comprises fluid pressure drive means.

7. A centrifugal barrel finishing apparatus as claimed in claim **1** further comprising position detecting means operatively associated with said tubs for detecting the position to which said tubs have been pivoted.

8. A centrifugal barrel finishing apparatus as claimed in claim **1** further comprising at least one feeding means positioned around the periphery of said turrets for feeding parts to be finished and a polishing media into a tub stopped at the position of the feeding means.

9. A centrifugal barrel finishing apparatus as claimed in claim **8** in which said feeding means is an annular trough extending around the turrets and having feeding chutes extending downwardly therefrom toward the tubs and at positions corresponding to the positions of the tubs on said lower turret when said turrets are stopped, hoppers above said annular trough for feeding parts and abrasive media into said trough, and vibration generating means associated with said trough for vibrating the media and the parts in said trough.

10. A centrifugal barrel finishing apparatus as claimed in claim **9** in which said trough is divided into two annular portions, one for polishing media and one for parts.

11. A centrifugal barrel finishing apparatus as claimed in claim **8** in which said feeding means comprises means for preparing a quantity of compound solution, finishing media and parts to be finished, a measuring box into which said quantity is fed, and liquid level measuring means in said measuring box for measuring the amount of the mixture fed into the box and discontinuing the feed when a predetermined amount has been fed.

12. A centrifugal barrel finishing apparatus as claimed in claim **1** further comprising an annular transporting and separating means around said lower turret having a trough extending in an annular path and having an end lying adjacent the annular path, a plurality of chutes spaced therearound at intervals corresponding to the spacing of the tubs around the turrets so that when the tubs are pivoted they discharge the contents into said chutes, vibrating means operatively associated with said annular transporting and separating means for transporting the contents of the tubs therealong toward said end, and a screening means at said end of the annular transporting and separating means for separating the media and the parts.

* * * * *