United States Patent [19]

Glover et al.

[11] **3,854,020**

[45] **Dec. 10, 1974**

[54] **TRIGGER MECHANISM FOR HAND-OPERATED POWER DEVICE INCLUDING STATIONARY LOCKING DEVICE WHICH PROVIDES LOCK-OFF AND LOCK-ON OPERATION**

[75] Inventors: **Richard Warmath Glover**, Joppa; **Gordon Frederick Musch**, Fork, both of Md.; **John A. Summa**, Anaheim, Calif.

[73] Assignee: **The Black and Decker Manufacturing Company**, Towson, Md.

[22] Filed: **June 29, 1973**

[21] Appl. No.: **375,081**

[52] **U.S. Cl.** **200/321**, 200/157

[51] **Int. Cl.** **H01h 9/20**

[58] **Field of Search** ..... 200/157, 169 R, 169 PB, 200/321, 322, 328

[56] **References Cited**

UNITED STATES PATENTS

1,929,662	10/1933	Wappat	200/157
2,564,612	8/1951	Schneider	200/60
2,676,217	4/1954	Garbs	200/60
2,701,288	1/1955	Russell et al.	200/169 R X
2,947,840	8/1960	Park et al.	200/157 X
3,413,498	11/1968	Bowen et al.	310/47
3,676,627	7/1972	Happe	200/157 X
3,780,246	12/1973	Beckering et al.	200/157
3,784,765	1/1974	Daly	200/157

FOREIGN PATENTS OR APPLICATIONS

1,064,120	4/1967	Great Britain	200/169 R
6,919,843	4/1969	Germany	

Primary Examiner—Robert K. Schaefer
Assistant Examiner—William J. Smith
Attorney, Agent, or Firm—Joseph R. Slotnik; Leonard Bloom; Edward D. Murphy

[57] **ABSTRACT**

A trigger mechanism for a hand-operated power tool includes a manually operable trigger movable between inoperative and operative levels and a stationary locking device which normally locks the trigger in its inoperative level and permits the trigger to be locked in its operative level. The trigger is slidable in its inoperative level from a lock-off position wherein the locking device prevents movement of the trigger to its operative level to an unlock position wherein the trigger is manually movable to its operative level. The trigger is also slidable in its operative level from an on position to a lock-on position wherein the locking device locks the trigger in its operative level for continuous operation of the power tool. The trigger mechanism requires distinct, intentional actions for its unlock and lock-on operations and thus provides a safeguard against accidental operation of the tool.

13 Claims, 4 Drawing Figures

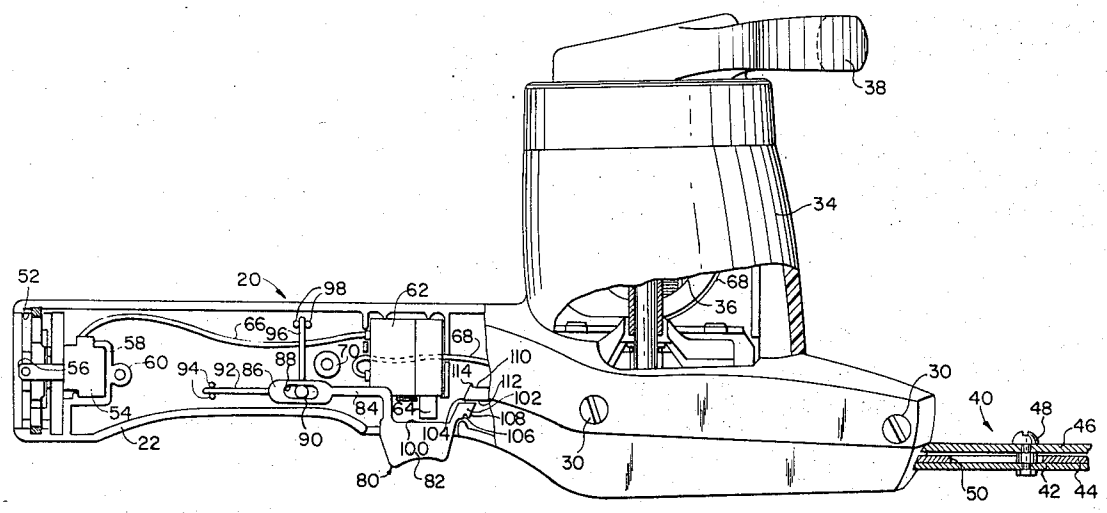

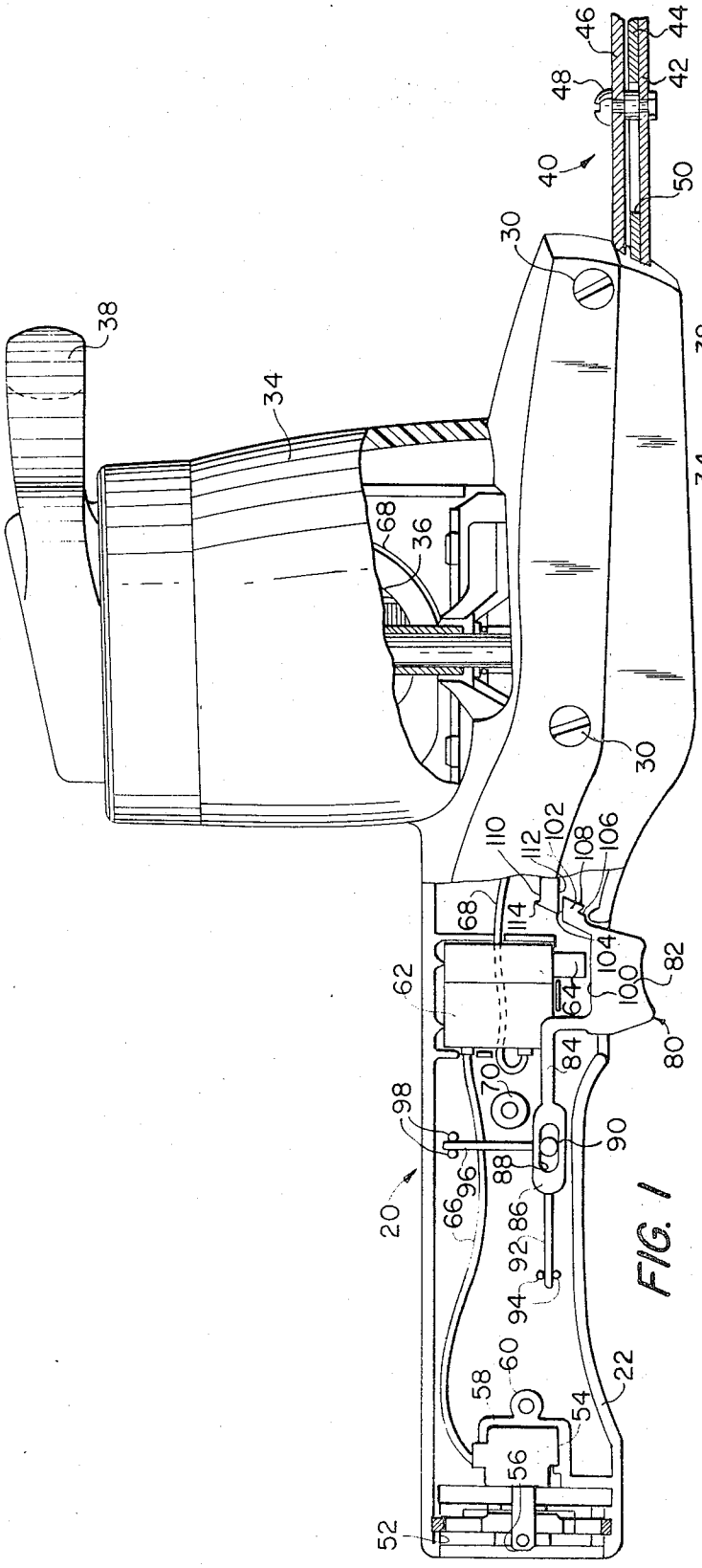
38
34
68
36
30
30
46
44
48
42
40
50
110
112
102
108
106
68
114
104
100
82
62
64
80
84
70
98
90
96
88
20
66
86
92
94
60
58
22
54
56
52

FIG. 1

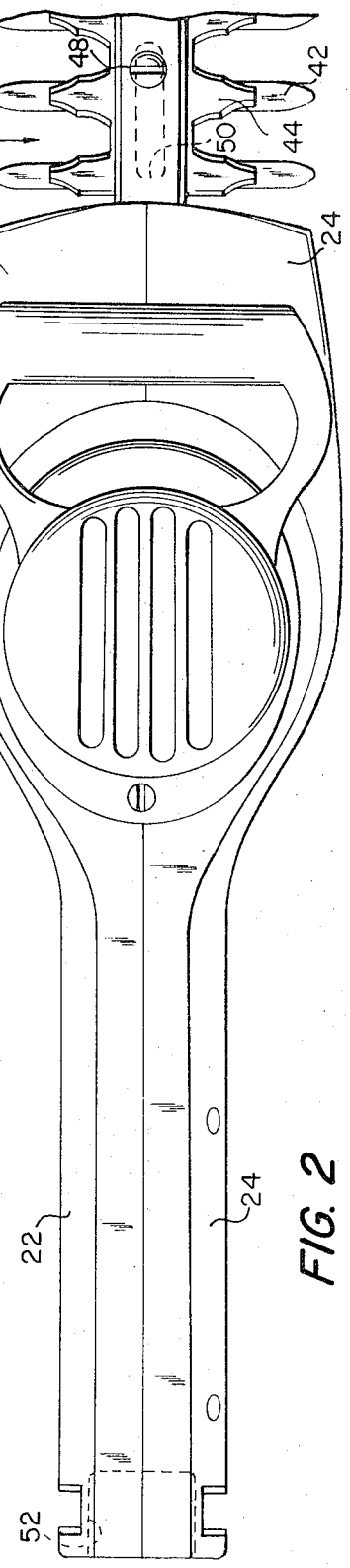
48
42
40
50
44
22
24
38
34
22
24
52

FIG. 2

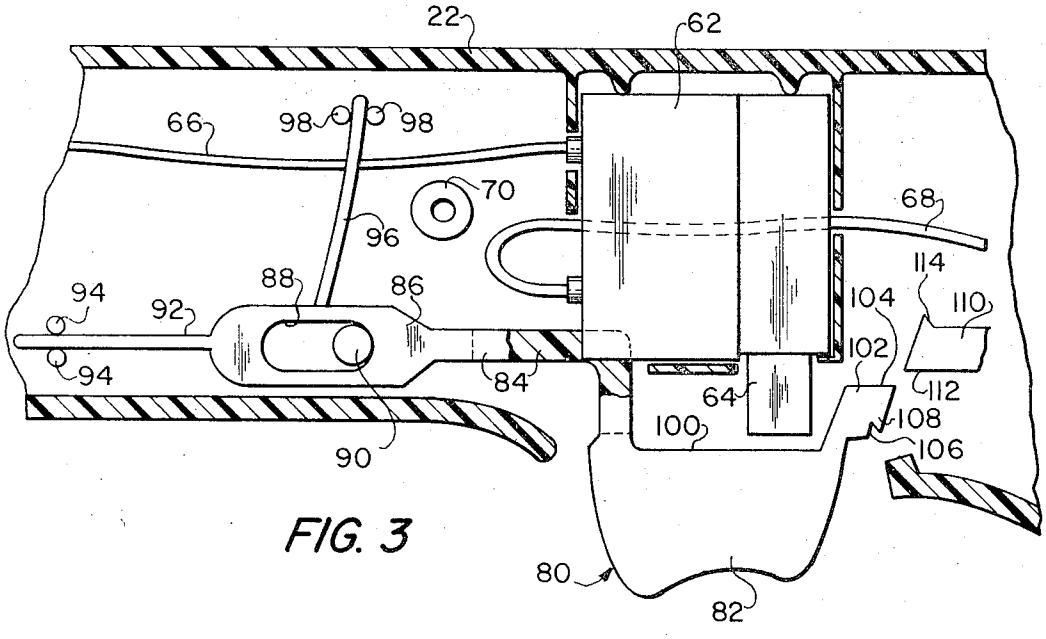
22
62
66
98
98
70
68
96
114
88
86
104
110
94
92
102
94
84
112
64
108
100
106
90
80
82

FIG. 3

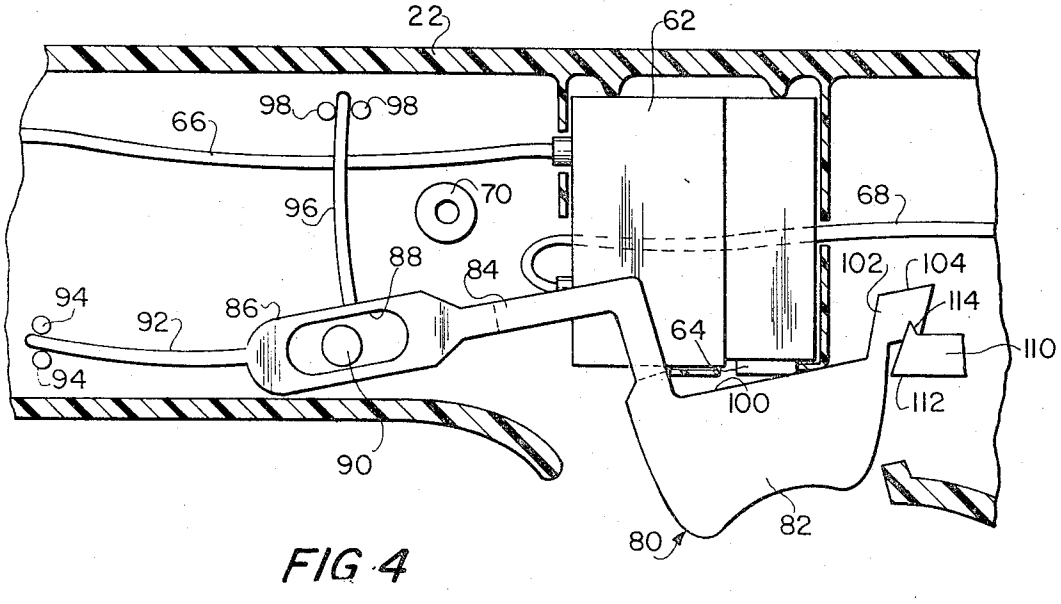
22
62
66
98
98
70
68
96
88
84
102
104
94
86
114
92
64
110
94
100
112
90
80
82

FIG 4

TRIGGER MECHANISM FOR HAND-OPERATED POWER DEVICE INCLUDING STATIONARY LOCKING DEVICE WHICH PROVIDES LOCK-OFF AND LOCK-ON OPERATION

The present invention relates to a trigger mechanism for a hand-operated power device and, more particularly, to a trigger mechanism for a portable, hand-operated power tool driven by an electric motor which is automatically locked off when turned off and which permits the tool to be temporarily locked on for continuous operation.

In the prior art, portable, hand-operated power tools, e.g., electrically powered hedge or shrub trimmers, grass shears and power saws, have included trigger mechanisms incorporating automatic lock-off and manual lock-on features. These features have been provided by a locking device movable between lock-off and lock-on positions to control the operation of a trigger. The automatic lock-off feature has protected an operator against accidental operation of the power tool, and the lock-on feature has enabled the operator to continuously operate the power tool without the necessity of exerting continuous manual pressure on the trigger.

The prior art trigger mechanisms have been capable of operation by a simple activity to operate the power tool between its lock-off and lock-on states. For example, it has been possible for an operator, by continuous movement of the locking device in a single direction, to unlock the trigger mechanism from its lock-off state and to operate the trigger mechanism to its lock-on state. Since only a simple activity has been required to operate the prior art trigger mechanisms from lock-off to lock-on states, the possibility of accidental lock-on operation of the power tool has been enhanced along with the attendant risk of injury to the operator.

To avoid the disadvantages of the prior art, it is desirable to provide a trigger mechanism having automatic lock-off and manual lock-on features of portable, hand-operated power tool which requires a positive, intentional action, distinct from the activity required to unlock the trigger mechanism, to operate the trigger mechanism into its lock-on state. The requirement of a positive, intentional action minimizes the possiblity of inadvertent lock-on operation of the tool.

It is an object of the present invention to provide a trigger mechanism for a hand-operated power tool which provides automatic lock-off and manual lock-on operation and requires an operator to consciously perform a complex activity to operate the trigger mechanism from its lock-off state to its lock-on state to minimize the possibility of inadvertent operation of the tool.

It is an additional object of the present invention to provide a trigger mechanism for a hand-operated power tool incorporating a stationary locking device including lock-off and lock-on portions cooperatively engageable with a manually operable trigger to provide automatic lock-off and manual lock-on operations and requiring a positive, intentional action by an operator, distinct from the action required to move the trigger out of registration with the lock-off portion of the locking device to move the trigger into engagement with the lock-on portion of the locking device.

It is still another object of the present invention to provide a trigger mechanism for a hand-operated power tool incorporating a locking device including lock-off and lock-on means cooperatively engageable with a manually operable trigger to provide automatic lock-off and manual lock-on operations and requiring a distinct and different trigger action by an operator from the action required to move the trigger out of the lock-off condition to move the trigger into the lock-on condition.

It is a further object of the present invention to provide a trigger mechanism for a hand-operated power tool incorporating a trigger which is automatically returned to its lock-off position upon termination of the operation of the trigger mechanism, i.e., when the tool is turned off.

In accordance with the invention, a trigger mechanism for a hand-operated power device including a motor and a control operatively associated with the motor includes a manually operable trigger movable from an inoperative level to an operative level to actuate the control and operate the motor, the trigger being manually movable in its inoperative level from a lock-off position to an unlock position wherein it is movable to its operative level to actuate the control and manually movable in its operative level to a lock-on position to continuously actuate the control; and a locking device which preferably is stationary and includes a lock-off portion cooperatively engageable with the trigger in its lock-off position to prevent movement of the trigger from its inoperative level to its operative level and a lock-on portion cooperatively engageable with the trigger in its lock-on position to maintain the trigger in its operative level to continuously actuate the control and operate the motor. Preferably, the trigger is normally biased toward its inoperative level and its lock-off position. A positive, intentional action, distinct from the action required to unlock the trigger, is required by an operator to move the trigger to its lock-on position. The requirement of distinct actions reduces the likelihood of inadvertent operation of the power device to its lock-on state and thus minimizes the risk of injury to the operator.

In a preferred embodiment of the trigger mechanism, for use in a hand-operated power tool including an electric motor and a handle which supports a switch operatively associated with the motor, the trigger is mounted on the handle for both slidable and pivotal movement and the stationary locking device is mounted on the handle adjacent to the trigger. The trigger is pivotable from an inoperative level to an operative level to actuate the switch and, in each level, it is slidable relative to the handle. In its inoperative level, the trigger is slidable from a lock-off position, wherein the lock-off portion of the locking device is in registration with the trigger to prevent pivotal movement of the trigger to its operative level, to an unlock position wherein the lock-off portion of the locking device is out of registration with the trigger to permit pivotal movement of the trigger to its operative level to actuate the switch. In its operative level, the trigger is slidable from an on position to a lock-on position wherein the lock-on portion of the locking device engages the trigger to maintain the trigger in its operative level to continuously actuate the switch and operate the motor.

The trigger is normally biased by novel spring means toward its inoperative level and its lock-off position. If the trigger, in its unlock position and either on or off, is completely released, it automatically returns to its

lock-off position. Similarly, if the trigger, in its operative level and its lock-on position, is disengaged from the locking device and completely released, the trigger automatically returns to its inoperative level and its lock-off position.

The automatic lock-off and manual lock-on features of the trigger mechanism of the present invention preclude inadvertent operation of the power tool. The automatic lock-off feature requires an operator to perform an unlock activity prior to the actuation of the trigger to operate the tool. In addition, the manual lock-on feature requires the operator to perform a positive, intentional action, which is distinct from the unlock activity, to achieve lock-on operation of the power tool. These safety features of the trigger mechanism prevent an inexperienced operator from accidentally turning on the power tool and locking the tool on for continuous operation.

The accompanying drawings illustrate a preferred embodiment of the invention and, together with the description, serve to explain the principles of the invention.

BRIEF DESCRIPTION OF THE DRAWINGS

FIG. 1 is a side elevation, partially cutaway, of a portable hand-operated power tool, e.g., a shrub or hedge trimmer, having a handle which supports a trigger mechanism including a trigger, trigger biasing assembly, and a stationary locking device constructed in accordance with the principles of the present invention, a motor, and a cutting blade assembly;

FIG. 2 is a plan view of the portable power tool of FIG. 1 illustrating the construction of the handle in two sections;

FIG. 3 is an enlarged side view, partially in section, taken along line 3—3 of FIG. 2, of a portion of the handle of the portable power tool, with one handle section removed, illustrating the trigger moved to its unlock position; and

FIG. 4 is an enlarged side view, partially in section, of the same portion of the power tool handle illustrating the trigger moved to its lock-on position.

DETAILED DESCRIPTION

FIG. 1 illustrates a portable, hand-operated power tool, e.g., a shrub or hedge trimmer, which incorporates a trigger mechanism constructed according to the principles of this invention. The power tool includes an elongated, hollow handle, generally **20**, consisting of two half sections **22** and **24** (FIG. 2). The half-sections of handle **20** are essentially mirror images of each other and are held together by a plurality of screws or bolts **30** (two shown in FIG. 1).

Referring to FIGS. 1 and 2, handle **20** includes a rearward portion which is relatively narrow and elongated to provide a convenient shape to be gripped by the hand of an operator. The handle also includes an enlarged forward portion to support a housing **34** for receiving a motor **36** which drives the power tool. A hand grip **38** is secured at the top of the housing to allow the operator to grip the tool with both hands.

As shown in FIG. 1, a cutting blade assembly, generally **40**, extends forward from the front end of handle **20**. The cutting blade assembly is representative of one standard construction and, thus, only a portion of the assembly is illustrated.

Cutting blade assembly **40** includes a lower, stationary blade **42**, an upper, reciprocating blade **44**, and an elongated support member **46** which extends forward from the front end of the handle above reciprocating blade **44**. Lower, stationary cutting blade **42** is secured to support member **46** by a plurality of nuts and bolts **48** (one shown in FIG. 1) spaced along the cutting blade assembly. Upper, reciprocating blade **44** includes a plurality of elongated slots **50** extending longitudinally along the blade for receiving bolts **48** to permit blade **44** to be reciprocated relative to stationary blade **42** and support member **46**. A drive mechanism (not shown) is provided to convert the rotary output of motor **36** to reciprocating motion of blade **44**. Alternatively, the blades **42** and **44** may both be reciprocated by suitable means (not shown).

In the present embodiment, the rear end of handle **20** is provided with a power cord receptacle **52** for receiving a detachable power cord (not shown) to connect the tool to an electrical power source. The power cord receptacle receives a specially shaped power cord connector (not shown) of the detachable power cord to enable the tool to be connected to the power source. It is understood that the detachable power cord and receptacle do not constitute any part of the present invention and that other power cord arrangements, e.g., a permanently attached power cord, can be used to supply electric power to the tool.

Referring to FIG. 3, the tool includes a plug **54** located within the interior of handle **20** with a pair of plug blades **56** (one shown in FIG. 3) extending rearwardly into power cord receptacle **52**. A generally rectangular support **58** extends inwardly from the interior of handle section **22** for supporting plug **54** in a fixed position relative to the handle. The connector of the detachable power cord (not shown) received in power cord receptacle **52** is adapted to make electrical contact with plug blades **56** to connect the tool to a source of electrical power. Rectangular support **58** includes a first, cylindrical projection **60** extending inwardly from the interior of handle section **22** including a central opening for receiving a screw (not shown) in the assembly of the handle.

As shown in FIGS. 1 and 3, the power tool handle supports a control here shown to be an on-off switch **62** operatively associated with motor **36**. Switch **62** may be a single speed, on-off switch, a multiple speed switch, or a variable speed switch. It includes an actuator **64** normally biased downward to an off position and movable upward to an on position to operate the motor. A first pair of conductors **66** (only one shown) connects plug **54** to switch **62**. In addition, a second pair of conductors **68** (only one shown) connects switch **62** to motor **36**.

Handle section **22** includes an additional cylindrical projection **70** for receiving another screw (not shown) in the assembly of the handle. Similar cylindrical projections (not shown) are provided on the interior of handle section **22** for receiving screws **30** of FIG. 1.

The power tool handle supports a trigger mechanism for actuating switch **62** to control operation of motor **36**. The trigger mechanism provides automatic lock-off and manual unlock, on, and lock-on operations for control of the motor. The manual unlock and lock-on operations require intentional, distinct actions by the operator to unlock the trigger mechanism for manual

operation and to achieve continuous operation of the power tool.

In accordance with the invention, the trigger mechanism includes a manually operable trigger movable from an inoperative level to an operative level to actuate the control and operate the motor. The trigger is manually movable in its inoperative level from a lock-off position to an unlock position wherein it is movable to its operative level into an on position to actuate the control. It is also manually movable in its operative level from the on position to a lock-on position to continuously actuate the control. In a preferred embodiment of the trigger mechanism, improved means is provided for normally biasing the trigger toward its inoperative level and its lock-off position.

Referring to FIG. 3, the preferred embodiment of the trigger mechanism includes a trigger, generally **80**, mounted within the interior of handle **30** which includes a finger engageable body **82** protruding downwardly through a trigger opening defined by adjacent slots provided in the bottom of handle sections **22** and **24**. Trigger **80** also includes a pair of spaced, parallel arms **84** extending rearwardly from trigger body **82**.

As shown in FIG. 3, switch **62** is positioned in the space between arms **84** of the trigger. The arms terminate in an enlarged collar **86** which is provided with an elongated, horizontal slot **88** for receiving a stationary pin **90** projecting inwardly from the interior of handle section **22**. The pin supports trigger **80** for both slidable and pivotal movement relative to the handle.

Trigger **80** may be constructed from a suitable elastomeric, non-conductive material and includes a first, integral leaf spring **92** extending horizontally backward from collar **86** with its free end received between a pair of stationary pins **94** provided on the interior of handle section **22**. The purpose of first, integral leaf spring **92** is to normally bias trigger body **82** downward to its inoperative level (FIGS. 1 and 3). In addition, trigger **80** includes a second integral leaf spring **96** extending vertically upward from collar **86** with its free end received between a pair of pins **98** provided on the interior of handle section **22**. The purpose of second, integral leaf spring **96** is to normally bias the trigger body forward toward a lock-off position (FIG. 1).

Trigger body **82** includes an upper, actuating surface **100** which moves into contact with actuator **64** of switch **62** upon upward movement of the trigger to an operator level. In addition, a finger **102** projects forward from the front end of trigger body **82**. The finger includes a top, lock-off surface **104** and a notch **106** formed in its lower surface which provides a downwardly extending lip or lock-on member **108**.

In accordance with the invention, the trigger mechanism also includes a locking device, preferably stationary, including a lock-off portion cooperatively engageable with the trigger in its lock-off position to prevent movement of the trigger from its inoperative level to its operative level and a lock-on portion cooperatively engageable with the trigger in its lock-on position to maintain the trigger in its operative level to continuously actuate the control and operate the motor. Referring to FIGS. 1 and 3, a locking device or rib **110** projects inwardly from the interior of handle section **22**. Rib **110** is located above finger **102** of trigger body **82** when the trigger is in its lock-off position (FIG. 1) Rib **110** includes a lower, lock-off surface **112** and a lock-on member or ridge **114** projecting upward from its upper surface.

In the operation of the trigger mechanism, integral leaf spring **92** normally maintains trigger body **82** in a downward inoperative level, and integral leaf spring **96** normally maintains the trigger body in a forward, lock-off position. Referring to FIG. 1, with trigger **80** in its inoperative position, lock-off surface **112** of locking device **110** is in registration with lock-off surface **104** of finger **102** of the trigger to prevent upward movement of trigger body **82** from its inoperative level.

When it is desired to unlock the trigger mechanism, the operator manually engages trigger body **82** and slides the trigger longitudinally backward against the bias of leaf spring **96** to its unlock position (FIG. 3). With the trigger in its unlock position, lock-off surface **112** of locking member **110** is out of registration with lock-off surface **104** of finger **102** to permit trigger body **82** to be moved upward to its operative level. The operator can then pivot trigger **80** upward against the bias of leaf spring **92** to its operative level by manually applying pressure to trigger body **82**. Upon upward movement of trigger **80** to its operative level, i.e., into its on position, actuating surface **100** of trigger body **82** moves switch actuator **64** upward to actuate switch **62** and operate the motor **34**.

If, at this time, the trigger is released, leaf spring **92** returns trigger body **82** downward to its inoperative level and leaf spring **96** returns the body forward to its lock-off position. The trigger is thus automatically returned to its lock-off position when the operation of the trigger mechanism is terminated.

When it is desired to lock trigger **80** in its upward, operative level, the operator can slide trigger body **82** forward from its on position to a lock-on position (FIG. 4). With the trigger body in its lock-on position, lock-on ridge **114** is received in notch **106** of finger **102** of the trigger body. Integral leaf spring **92** exerts a downward bias on trigger body **82** and integral leaf spring **96** exerts a backward bias on the trigger body to maintain its lip **108** in engagement with lock-on ridge **114**. Trigger body **82** is thus locked in its upward, operative level to continuously actuate switch **62** and operate motor **34**.

When it is desired to terminate lock-on operation of the trigger mechanism, the operator manually engages trigger body **82** and moves the trigger body slightly upward to disengage its lip **108** from lock-on ridge **114** of locking device **110**. If the trigger is thereafter released, integral leaf springs **92** and **96** automatically return trigger body **82** to its downward, inoperative level and its lock-off position (FIG. 1).

The preferred embodiment provides a trigger mechanism having automatic lock-off and manual lock-on features. The trigger mechanism requires distinct actions, i.e., slidable movement of its trigger in reverse directions, to unlock the trigger for manual on-off operation of the power tool and to lock the trigger on for continuous operation of the tool. The requirement of distinct, intentional actions precludes inadvertent operation of a trigger mechanism.

The invention, in its broader aspects, is not limited to the specific details shown and described, and modifications may be made in the details of the trigger mechanism without departing from the principles of the present invention.

What is claimed is:

1. A trigger mechanism for a hand-operated power device including a motor and a control operatively associated with the motor, comprising:

a manually operable trigger movable from an inoperative level to an operative level to actuate the control and operate the motor, said trigger being manually movable in its inoperative level from a lock-off position to an unlock position wherein it is movable to its operative level to actuate the control and manually movable in its operative level to a lock-on position to continuously actuate the control;

a stationary locking device including a lock-off portion cooperatively engageable with said trigger in its lock-off position to prevent movement of said trigger from its inoperative level to its operative level and a lock-on portion cooperatively engageable with said trigger in its lock-on position to maintain said trigger in its operative level to continuously actuate the control and operate the motor;

means for normally biasing said trigger toward its inoperative level; and

means for biasing said trigger to a position in which said trigger cooperates with said lock-off portion when said trigger is at its inoperative level, and in which said trigger is released from said lock-on portion when said trigger is at its operative level.

2. A trigger mechanism as claimed in claim 1 wherein said locking device includes a sloped surface extending through said neutral position for enabling said first-mentioned means to overcome said last-mentioned means whereby said trigger is automatically returned to its lock-off position from any released position other than said lock-on position.

3. A trigger mechanism for a hand-operated power tool including an electric motor and an elongated, hollow handle which supports a switch operatively associated with the motor; comprising:

a manually operable trigger mounted within the handle and including a finger engageable body extending through an opening provided in the handle, said trigger having an arm which extends from its body and includes an elongated slot for receiving a pin provided on the handle to permit slidable movement of said trigger longitudinally relative to the handle and pivotal movement of said trigger transversely relative to the handle, said trigger body including a lock-off surface and a lock-on member, said trigger being pivotable from an inoperative level to an operative level to actuate the switch and operate the motor; said trigger being longitudinally slidable relative to the handle in its inoperative level from a lock-off position to an unlock position wherein said trigger is pivotable to its operative level to actuate the switch, said trigger being longitudinally slidable relative to the handle in its operative level to a lock-on position to continuously actuate the switch, said trigger being normally biased toward its inoperative level and its lock-off position; and

a locking member mounted within the handle adjacent to said trigger body, said locking member including a lower surface in registration with said lock-off surface of said trigger body when said trigger is in its lock-off position to prevent pivotal movement of said trigger from its inoperative level to its operative level, said lower surface of said locking member being out of registration with said trigger body when said trigger is in its unlock position to permit pivotal movement of said trigger to its operative level to actuate the switch, said locking member including a ridge on its upper surface for engaging said lock-on member of said trigger body to lock said trigger in its operative level to continuously actuate the switch and operate the motor;

means for normally biasing said trigger toward its inoperative level; and

means for biasing said trigger to a position in which said trigger cooperates with said lock-off portion when said trigger is at its inoperative level, and in which said trigger is released from said lock-on portion when said trigger is at its operative level.

4. A trigger mechanism for a hand-operated power tool including an electric motor and an elongated, hollow handle which supports a switch operatively associated with the motor, comprising:

a manually operable trigger mounted within the handle and including a finger engageable body extending downward through an opening provided in the handle, said trigger having an arm which extends backward from its body and includes an elongated, horizontal slot for receiving a pin provided on the handle to permit slidable movement of said trigger horizontally relative to the handle and pivotal movement of said trigger vertically relative to the handle, said trigger body including a finger which extends forward from said trigger body and includes an upper, lock-off surface and a lower surface provided with a downwardly extending lock-on member, said trigger being vertically pivotable from an inoperative level to an operative level to actuate the switch and operate the motor, said trigger being slidable backward relative to the handle in its inoperative level from a lock-off position to an unlock position wherein said trigger is vertically pivotable to its operative level to actuate the switch, said trigger being slidable forward relative to the handle in its operative level to a lock-on position to continuously actuate the switch, said trigger including a first, integral leaf spring extending backward from said arm and engaging the handle to normally bias said trigger downward toward its inoperative level and a second, integral leaf spring extending upward from said arm and engaging the handle to normally bias said trigger forward toward its lock-off position; and

a locking member mounted within the handle above said trigger body, said locking member including a lower surface in registration with said lock-off surface of said finger when said trigger is in its lock-off position to prevent pivotal movement of said trigger from its inoperative level to its operative level, said lower surface of said locking member being out of registration with said finger when said trigger is in its unlock position to permit pivotal movement of said trigger to its operative level to actuate the switch, said locking member including a ridge on its upper surface for engaging said lock-on member of said finger to lock said trigger in its operative level to continuously actuate the switch and operate the motor.

5. A trigger mechanism for a hand-operated power tool including an electric motor and an elongated, hol-

low handle which supports an on-off switch operatively associated with the motor and provided with a movable actuator to control its operation, comprising:

a manually operable trigger mounted within the handle and including a finger engageable body extending downward through an opening provided in the handle, said trigger having an arm which extends backward from its body and includes an elongated, horizontal slot for receiving a pin provided on the handle to permit slidable movement of said trigger horizontally relative to the handle and pivotal movement of said trigger vertically relative to the handle, said trigger body including a finger which extends forward from said trigger body and includes an upper, lock-off surface and a lower surface provided with a downwardly extending lock-on member, said trigger body being located beneath the switch and including an actuating surface for engaging the switch actuator, said trigger being pivotable upward from an inoperative level to an operative level to move said actuating surface into engagement with the switch actuator to actuate the switch to turn on the motor, said trigger being slidable backward relative to the handle in its inoperative level from a lock-off position to an unlock position wherein said trigger is pivotable upward to its operative level to actuate the switch, said trigger being slidable forward relative to the handle in its operative level to a lock-on position to continuously actuate the switch, said trigger including a first, integral leaf spring extending backward from said arm and engaging the handle to normally bias said trigger downward toward its inoperative level and a second, integral leaf spring extending upward from said arm and engaging the handle to normally bias said trigger forward toward its lock-off position; and

a locking member mounted within the handle above said trigger body, said locking member including a lower surface in registration with said lock-off surface of said finger when said trigger is in its lock-off position to prevent pivotal movement of said trigger from its inoperative level to its operative level, said lower surface of said locking member being out of registration with said finger when said trigger is in its unlock position to permit pivotal movement of said trigger to its operative level to actuate the switch, said locking member including a ridge on its upper surface for engaging said lock-on member of said finger to lock said trigger in its operative level to continuously actuate the switch and operate the motor.

6. A trigger mechanism for a hand-operated power device including a motor and a control operatively associated with the motor, comprising:

a manually operable trigger movable from an inoperative level to an operative level to actuate the control and operate the motor, means normally biasing said trigger toward said inoperative level, said trigger being manually movable in its inoperative level from a lock-off position to an unlock position wherein it is movable to its operative level to actuate the control, and manually movable in its operative level to a lock-on position to continuously actuate the control;

locking means including a lock-off portion cooperatively engageable with said trigger in its lock-off position to prevent movement of said trigger from its inoperative level to its operative level, and a lock-on portion cooperatively engageable with said trigger in its lock-on position to maintain said trigger in its operative level to continuously actuate the control and operate the motor; and

means normally biasing said trigger into cooperable lock-off engagement with said locking means when said trigger is in its inoperative level.

7. A trigger mechanism for a hand-operated power tool including a motor and a handle which supports a control operatively associated with the motor, comprising:

a manually operable trigger mounted on the handle for both slidable and pivotal movement relative to the handle, said trigger being pivotable from an inoperative level to an operative level to actuate the control and operate the motor, said trigger being slidable in its inoperative level from a lock-off position to an unlock position wherein said trigger is pivotable to its operative level to actuate the control and slidable in its operative level to a lock-on position to continuously actuate the control; and

a locking device on the handle adjacent to said trigger, said locking device including a lock-off portion in registration with said trigger in its lock-off position to prevent pivotal movement of said trigger to its operative level, means normally biasing said trigger toward lock-off registration with said locking device when said trigger is in said inoperative level, said lock-off portion being out of registration with said trigger in its unlock position to permit pivotal movement of said trigger to its operative level to actuate the control, said locking device including a lock-on portion cooperatively engageable with to releasably retain said trigger in its lock-on position to maintain said trigger in its operative level to continuously actuate the control and operate the motor, and means normally biasing said trigger away from cooperative engagement with said lock-on portion when said trigger is in its operative level.

8. A trigger mechanism for a hand-operated power device including a motor and a control operatively associated with the motor, comprising:

a manually operable trigger movable from an inoperative level to an operative level to actuate the control and operate the motor, said trigger being manually movable in its inoperative level from a lock-off position to an unlock position wherein it is movable to its operative level to actuate the control, and manually movable in its operative level to a lock-on position to continuously actuate the control;

first biasing means arranged to constantly urge said trigger to its inoperative position; and

second biasing means for urging said trigger into a position where said trigger is in engagement with said lock-off portion when said trigger is at its inoperative level and for urging said trigger out of said lock-on position when said trigger is at its operative level.

9. A trigger mechanism for a hand-operated power tool including an electric motor and a switch for controlling the application of power to said motor, comprising:

a manually operable trigger for controlling said switch;

means mounting said trigger for pivotal movement between a first position in which said switch is off and a second position in which said switch is on;

means biasing said trigger toward said first position;

locking means including a lock-off portion engageable with said trigger for maintaining said trigger in said first position, and a lock-on portion for maintaining said trigger in said second position;

second biasing means associated with said trigger, said second biasing means being arranged to urge said trigger into engagement with said lock-off portion when said trigger is in said first position and to urge said trigger out of engagement with said lock-on portion when said trigger is in said second position.

10. A trigger mechanism as claimed in claim **9** wherein said locking device comprises a stop member, wherein said lock-off portion is a first surface of said stop member and wherein said lock-on portion is a second surface of said stop member; and

said mounting means for said trigger comprises means permitting movement of said trigger into engagement with said first surface when said trigger is in said first position and into engagement with said second surface when said trigger is in said second position.

11. A trigger mechanism as claimed in claim **10** wherein said mounting means for said trigger permits both pivotal movement of said trigger between said first position and said second position and lateral movement of said trigger into engagement with one of said first and said second surfaces of said locking device, said first surface being positioned closer to said trigger than said second surface, and said second biasing means urges said trigger into an intermediate lateral position relative to said first and said second surfaces whereby, at said first level, said trigger is engaged with said first surface and, at said second level, said trigger is normally spaced from said second surface.

12. A trigger mechanism as claimed in claim **11** wherein retaining means are provided for holding said trigger in engagement with said second surface upon movement of said trigger into such engagement.

13. A trigger mechanism as claimed in claim **11** wherein a sloped surface is provided between said first and said second surfaces, said sloped surface and said first biasing means cooperating to oppose said second biasing means to urge said trigger into its inoperative, lock-off position unless said trigger is engaged with said lock-on portion.

* * * * *