United States Patent [19]

Rudszinat

[11] **3,847,044**

[45] **Nov. 12, 1974**

[54] **METHOD AND APPARATUS FOR TESTING WRAPPERS OF CIGARETTES OR THE LIKE**

[75] Inventor: **Willy Rudszinat,** Dassendorf, Germany

[73] Assignee: **Hauni-Werke Korber & Co. KG,** Hamburg, Germany

[22] Filed: **Nov. 8, 1973**

[21] Appl. No.: **413,990**

[52] **U.S. Cl.** **83/2,** 83/79, 83/80, 83/98, 83/169, 83/522, 83/660

[51] **Int. Cl.** **A24c 5/28**

[58] **Field of Search** 83/80, 79, 27, 169, 2, 83/660, 98, 522

[56] **References Cited**

UNITED STATES PATENTS

3,264,916 8/1966 Owen 83/80

Primary Examiner—J. M. Meister

Attorney, Agent, or Firm—Michael S. Striker

[57] **ABSTRACT**

The wrappers of cigarettes are tested for a first time prior to and for a second time subsequent to the making therein of perforations by means of needles along which the wrappers roll during travel of cigarettes between a first and a second testing station. Cigarettes with defective wrappers are segregated after each testing operation or at a common ejecting location downstream of the second testing station.

14 Claims, 3 Drawing Figures

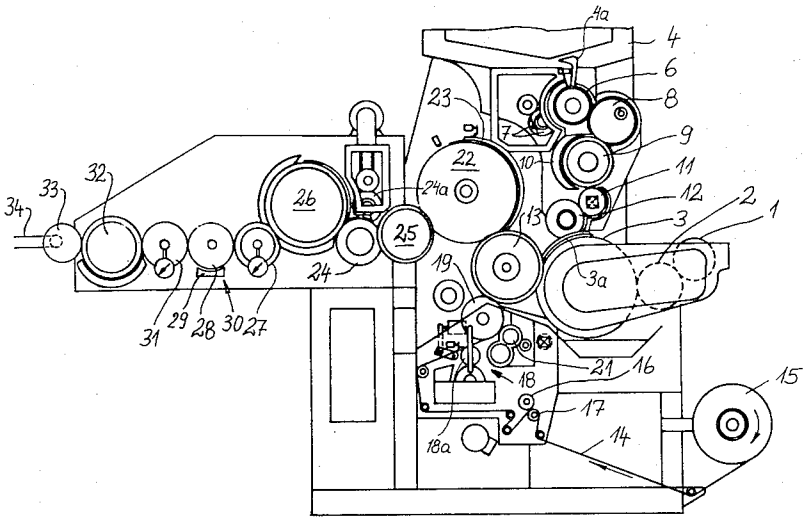

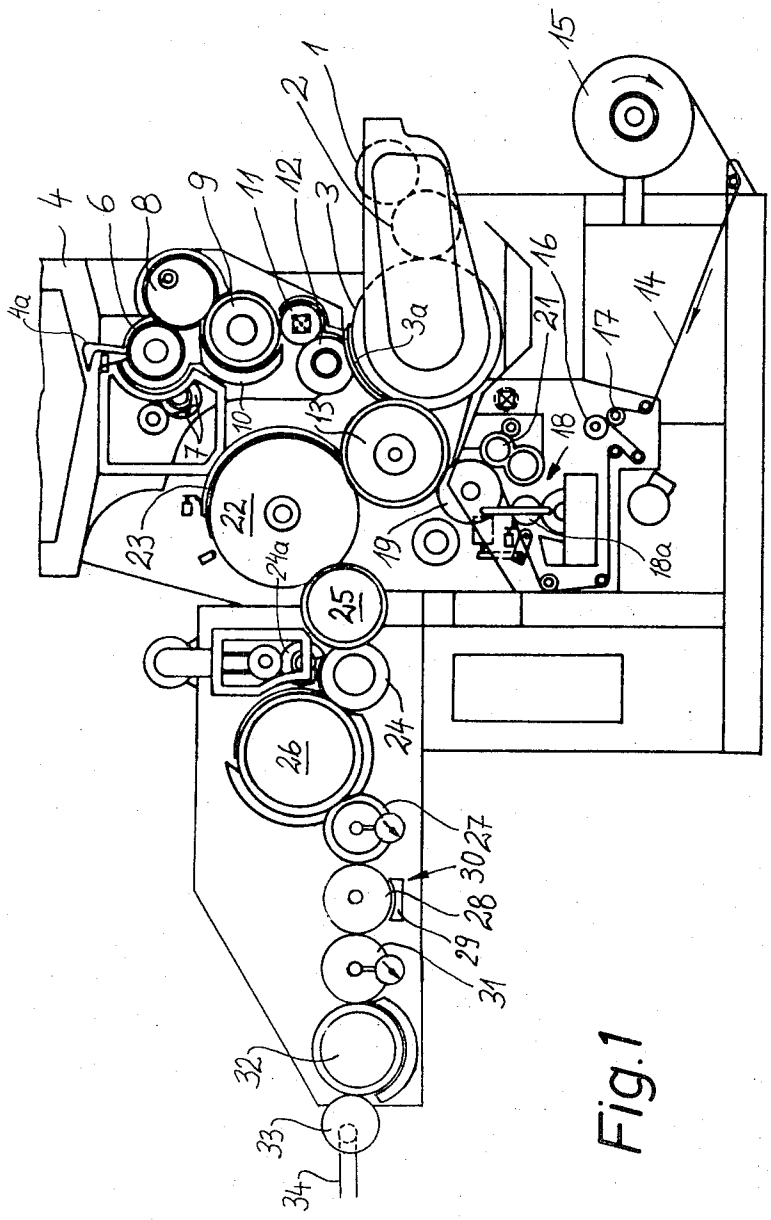
1
2
3
3a
4
4a
6
7
8
9
10
11
12
13
14
15
16
17
18
18a
19
21
22
23
24
24a
25
26
27
28
29
30
31
32
33
34

Fig.1

Fig. 2

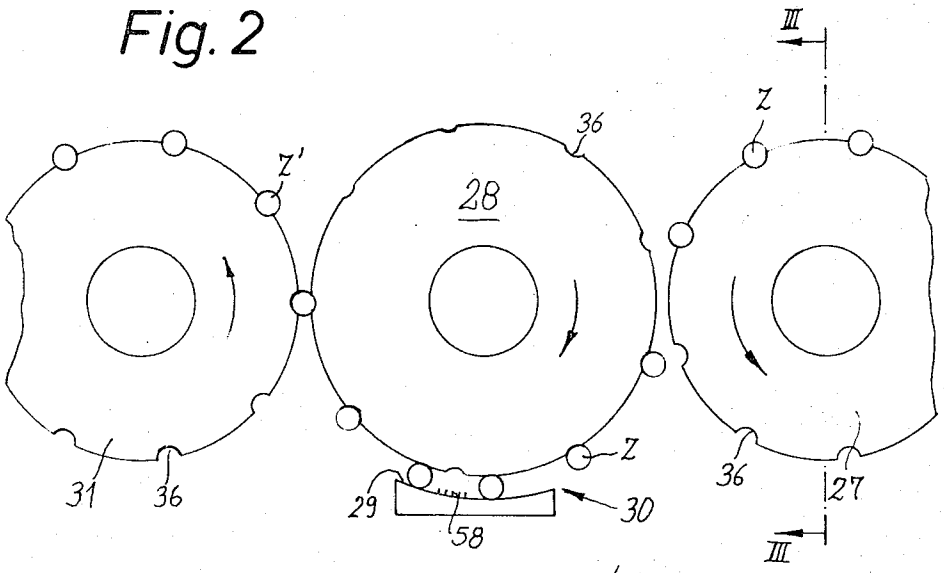
III
Z
36
Z'
28
Z
31
36
29
58
30
36
27
III

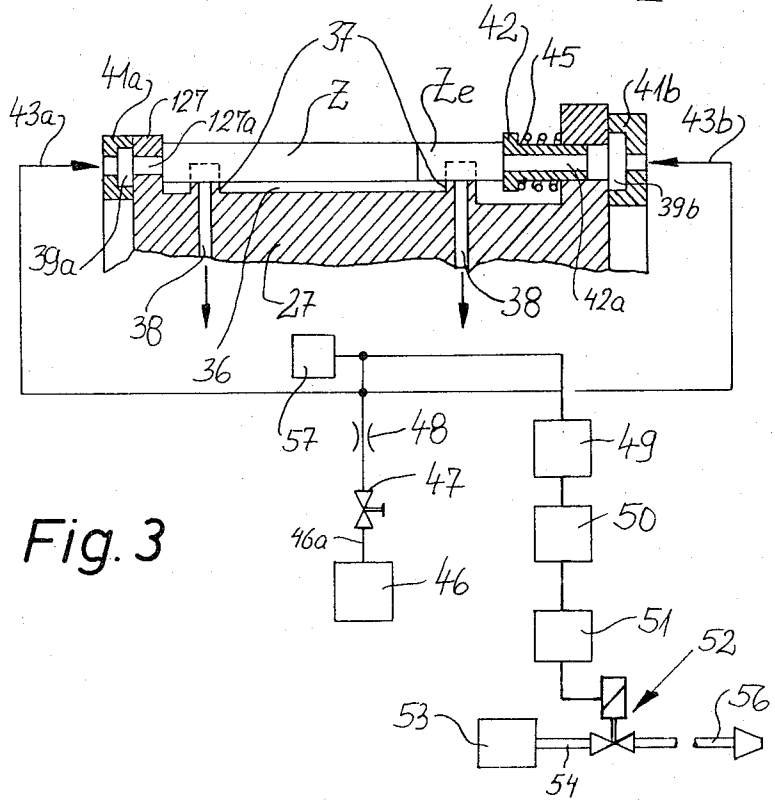
37
42
45
41a
127
Z
Ze
41b
43a
127a
43b
39b
39a
38
27
38
42a
36
57
48
49
47
50
46a
46
51
52
53
56
54

Fig. 3

METHOD AND APPARATUS FOR TESTING WRAPPERS OF CIGARETTES OR THE LIKE

BACKGROUND OF THE INVENTION

The present invention relates to a method and apparatus for testing the fillers and/or wrappers of plain or filter tipped cigarettes, filter rod sections, plain or filter tipped cigarillos, plain or filter tipped cigars and/or analogous rod-shaped articles wherein an open-ended tubular wrapper consisting of cigarette paper, cork, reconstituted tobacco and/or other suitable wrapping material surrounds one or more rod-like fillers consisting of or containing tobacco and/or other fibrous material. More particularly, the invention relates to a method and apparatus for repeatedly testing rod-shaped articles by means of air and/or another gaseous testing fluid (hereinafter referred to as air).

It is already known to perforate the wrappers of cigarettes or analogous rod-shaped articles in order to allow predetermined quantities of atmospheric air to enter the wrapper and to cool the smoke which is being drawn into the smoker's mouth. It is also known to test the wrappers and/or fillers of cigarettes or analogous rod-shaped articles prior to introduction into packs or other types of receptacles. However, the presently known methods and apparatus for testing of wrappers are not capable of detecting and segregating wrappers which are defective due to unsatisfactory perforation and/or due to the presence of defects which arose prior to the perforating step.

SUMMARY OF THE INVENTION

An object of the invention is to provide a novel and improved method of testing perforated wrappers of cigarettes or analogous rod-shaped articles.

Another object of the invention is to provide a method and apparatus for repeated testing of articles which insure the detection and allow for segregation of articles whose wrappers are defective prior to or as a result of the making of perforations therein.

A further object of the invention is to provide a method and apparatus for perforating and repeated testing of wrappers forming part of plain or filter tipped cigarettes and analogous rod-shaped articles.

An additional object of the invention is to provide a machine for the making and processing of cigarettes or analogous rod-shaped articles with novel and improved testing apparatus which can detect flaws in the wrappers not only if such flaws develop as a result of the making of holes in the wrappers but also if the flaws arose prior to the making of holes for admission of cool atmospheric air into the column of hot tobacco smoke.

One feature of the invention resides in the provision of a method of repeatedly testing the wrappers of cigarettes or analogous rod-shaped articles wherein a tubular wrapper surrounds a rod-like filler of fibrous material or the like. The method comprises the steps of conveying a succession of rod-shaped articles along a predetermined path, testing the wrappers of successive articles in a first portion of the path including establishing an air pressure differential between the interior and exterior of successive wrappers and producing first signals indicating the rate of air flow through the wrappers, perforating the wrappers of articles in a second portion of the path so that each of the thus perforated wrappers exhibits a predetermined number of holes or openings therein, and testing successive perforated wrappers in a third portion of the path including establishing an air pressure differential between the interior and exterior of successive perforated wrappers and producing second test signals indicating the rate of air flow through the wrappers.

The perforating step preferably includes the step of puncturing the wrappers, and such puncturing step preferably comprises rolling successive wrappers about their axes over an array of projections which thereby penetrate through the wrappers.

The method preferably further comprises the step of utilizing the first and/or second signals to segregate the respective articles from the path when the first and/or second signals indicate a rate of air flow which is without a predetermined range, i.e., without a first predetermined range as concerns the first signals and without second predetermined range as concerns the second signals. The segregating step or steps may include separately segregating the articles in response to those first signals and those second signals which are respectively indicative of defective unperforated and perforated wrappers, or segregating all of the defective articles from a predetermined portion of the path.

The novel features which are considered as characteristic of the invention are set forth in particular in the appended claims. The improved apparatus itself, however, both as to its construction and its mode of operation, together with additional features and advantages thereof, will be best understood upon perusal of the following detailed description of certain specific embodiments with reference to the accompanying drawing.

BRIEF DESCRIPTION OF THE DRAWING

FIG. **1** is a schematic side elevational view of a filter cigarette making machine including an apparatus which embodies the invention;

FIG. **2** is an enlarged view of a system of three conveyors in the apparatus of FIG. **1**; and

FIG. **3** is a fragmentary sectional view as seen in the direction of arrows from the line III—III of FIG. **2**.

DESCRIPTION OF THE PREFERRED EMBODIMENTS

FIG. **1** illustrates a filter cigarette making machine of the type known as MAX and produced by Hauni-Werke, Körber & Co. K.G., of Hamburg-Bergedorf, Western Germany. The machine comprises a transfer conveyor **1** which is a rotary drum having axially parallel flutes serving to receive discrete plain cigarettes of unit length from a suitable cigarette making machine, not shown. The conveyor **1** transfers plain cigarettes to two discrete aligning conveyors **2** (only one shown) each of which transports a single row of plain cigarettes sideways toward an assembly conveyor **3**. The arrangement is such that each flute of the assembly conveyor **3** receives a plain cigarette from each of the two aligning conveyors **2**, and such plain cigarettes are spaced apart by a distance at least slightly exceeding the length of a filter rod section or plug of double unit length.

The machine of FIG. **1** further comprises a magazine or hopper **4** for a stack of filter rod sections of six times unit length. A downwardly inclined duct **4***a* which receives filter rod sections from the magazine **4** delivers successive filter rod sections into the flutes of a rotary severing conveyor **6** cooperating with two rotary disk-

shaped knives **7** which are rotatable about a common axis and serve to subdivide each filter rod section of six times unit length into three coaxial filter rod sections or plugs of two times unit length. Such sections are transferred onto three discrete staggering conveyors **8** which cause the respective sections to travel at different speeds and/or through different distances in order to insure that the filter plugs which leave the three staggering conveyors **8** enter successive flutes of a shuffling conveyor **9** cooperating with one or more stationary cams **10** to convert the row of staggered filter plugs into a row wherein each next-following filter plug is located exactly behind the preceding filter plug. Successive filter plugs of such row are transferred into successive flutes of a transfer conveyor **11** and thereupon into successive flutes of an accelerating conveyor **12** serving to introduce a filter plug into the space between each pair of axially parallel plain cigarettes in the flutes of the assembly conveyor **3.**

The thus obtained groups of coaxial rod-shaped articles in the flutes of the assembly conveyor **3** (each such group comprises two coaxial plain cigarettes and a filter plug therebetween) are caused to advance between two stationary cams **3***a* which cause the plain cigarettes to move their inner ends into abutment with the respective ends of the adjacent filter plugs, and the thus condensed or shortened groups are transferred into successive flutes of a transfer conveyor **13** cooperating with a suction wheel **19** to provide each group with an adhesive-coated uniting band. The length of each band, as considered in the axial direction of the transfer conveyor **13,** is such that the band adheres in part to the respective filter plug as well as to the adjacent inner ends of the respective plain cigarettes.

The uniting bands are obtained by subdividing a continuous web or strip **14** of cigarette paper, cork or other suitable material into portions of unit length. The web **14** is being withdrawn from a roll **15** by two advancing rolls **16, 17** at least one of which is driven to advance the web in the direction indicated by arrows. One side of the web **14** is coated with adhesive by the roller-shaped applicator **18***a* of a conventional paster **18,** and the other side of the web **14** is attracted to the peripheral surface of the suction wheel **19.** This wheel cooperates with a rotary cutter **21** having a plurality of blades which sever the web **14** at regular intervals to convert the leading end of the web into a succession of adhesive-coated uniting bands.

The peripheral speed of the suction wheel **19** slightly exceeds the speed of lengthwise movement of the web **14** so that the uniting bands are spaced apart from the leader of the unsevered portion of the web and can be conveniently attached to successive groups in the flutes of the transfer conveyor **13.** The latter transfers the groups (each of which carries and adhesive-coated uniting band) onto a rolling or wrapping conveyor **22** cooperating with a complementary rolling device **23** to convolute each uniting band around the respective filter plug and around the adjacent inner ends of the respective plain cigarettes whereby such groups are converted into filter cigarettes of double unit length.

Successive filter cigarettes of double unit length are introduced into the flutes of a transfer conveyor **25** which delivers them into successive flutes of a severing conveyor **24** cooperating with a rotary disk-shaped knife **24***a* to subdivide each filter cigarette of double unit length into a pair of coaxial filter cigarettes of unit length. Such pairs of filter cigarettes of unit length are transferred onto an inverting conveyor **26** which inverts one filter cigarette of each pair end-for-end and places it into the space between two adjacent non-inverted filter cigarettes so that the filter cigarettes leaving the inverting conveyor **26** form a single row wherein the cigarettes move sideways and the filter plugs of all filter cigarettes face in the same direction. It is to be noted that the knife **24***a* severs each filter cigarette of double unit length midway across the convoluted uniting band and the filter plug so that each filter cigarette of unit length includes a plain cigarette, one-half of a filter plug (i.e., a filter plug of unit length and one-half of a convoluted uniting band.

The inverting conveyor **26** is followed by an apparatus including a first testing unit having a rotary drum-shaped conveyor **27** and wherein the filter cigarettes of unit length are examined for the condition of their wrappers (each such wrapper includes the tubular wrapper of the respective plain cigarette, the tubular wrapper of the respective filter plug of unit length, and one-half of a convoluted uniting band). The testing unit including the conveyor **27** is normally designed to determine the presence or absence of defects which permit the flow of air and/or smoke through the wrappers of filter cigarettes of unit length (hereinafter called cigarettes for short). Such defects can constitute holes in the wrappers, open seams which allow gaseous fluid to flow from and/or into the fillers of the respective cigarettes, excessive porosity of the wrappers, tears in the ends of the wrappers and/or a combination of two or more of the above.

The testing unit including the conveyor **27** is followed by an aperturing or perforating unit **30** including a drum-shaped conveyor **28** and a cushion or support **29** having an array of needle-like projections **58** (see FIG. **2**) which pierce or puncture the wrappers of successive cigarettes a predetermined number of times to thus provide small passages or holes for the entry of atmospheric air which cools the smoke while the smoke is being drawn into the mouth.

The aperturing or perforating unit **30** is followed by a second testing unit including a conveyor **31** which is similar to or identical with the conveyor **27** of the first testing unit. The purpose of the second testing unit is to determine the permeability of wrappers of successive cigarettes subsequent to piercing or puncturing of such wrappers by the projections **58** of the support **29.** The conveyor **31** of the second testing unit delivers cigarettes to a conveyor **32** forming part of a third testing unit which serves to determine the density of tobacco at the tobacco-containing ends of successive cigarettes. The cigarettes are thereupon transferred onto the upper stretch of an endless belt **34** by a further conveyor **33,** and the belt **34** transports the cigarettes (preferably only those cigarettes which are free of defects) into storage, to a tray filling apparatus or directly to a packing machine, not shown.

Save for the apparatus including the group of three testing units and the perforating unit **30,** the machine of FIG. **1** is well known in the art and is being used extensively by the manufacturers of filter cigarettes not only here but also abroad. The construction and mode of operation of certain parts of the testing units including the conveyors **27, 31** and **32** are also known. Therefore, FIGS. **2** and **3** merely show some details of one of the testing units and the details of the unit **30,** such as

are necessary for complete understanding of the invention.

FIG. 2 shows on a larger scale the conveyors **27, 28** and **31,** the support **29** of the perforating unit **30,** the needle-like projections **58** of the support **29,** and the receiving means or flutes **36** of the conveyors **27, 28** and **31.** The filter cigarettes of unit length with unperforated wrappers are shown at Z, the filter cigarettes with perforated wrappers are shown at Z′, and the arrows indicate the direction of rotation of the conveyors **27, 28** and **31.** A flute **36** of one of the conveyors **28, 31** (e.g., the conveyor **27**) is shown in FIG. **3.** This flute is formed by two sockets provided in two spaced apart radially outwardly extending axially aligned lugs **37** of the conveyor **27** and serving to receive two spaced apart portions of the wrapper of a cigarette Z. The lugs **37** are formed with radially inwardly extending suction ports **38** which communicate with axially parallel blind bores in the body of the conveyor **27.** The open ends of such blind bores are provided in one end face of the conveyor **27,** and this end face abuts against one end face of a stationary valve plate, not shown, having an arcuate groove which communicates with the inlet of a suction generating device, e.g., a fan. The blind bores communicate with the groove of the valve plate while the cigarettes Z travel from the transfer station between the conveyors **26, 27** to the transfer station between the conveyors **27, 28.**

The conveyor **27** is flanked by two stationary ring-shaped members **41***a*, **41***b* having slots **39***a*, **39***b* for reception of compressed air by way of conduits **43***a*, **43***b*. A cigarette Z which is transferred into the flute **36** of FIG. **3** by the conveyor **26** is biased against a flange **127** of the conveyor **27** by a reciprocable plunger **42** which is biased by a helical spring **45** and engages the free end of the filter plug Ze. The plunger **42** is movable axially of the cigarette Z by a cam and follower assembly of conventional design so as to allow for unobstructed entry of the cigarette Z at the transfer station between the conveyors **26, 27** an for unobstructed removal of cigarette Z at the transfer station between the conveyors **27, 28.** The plunger **42** has an axial bore **42***a* which receives compressed air from the conduit **43***b* during travel past the slot **39***b*. The flange **127** has discrete bores or channels **127***a* which communicate with the conduit **43***a* during travel past the slot **39***a*. The conduits **43***a*, **43***b* receive compressed air from a source **46** and by way of a conduit **46***a* containing a regulating valve **47** and a preferably adjustable flow restrictor **48.**

An electropneumatic transducer **49** is provided to produce test signals which are indicative of air pressure in the conduits **43***a*, **43***b*, and such pressure is indicative of the condition of the wrapper of the cigarette Z which is being transported through the testing station (this testing station occupies that portion of the path for successive cigarettes Z wherein the cigarettes travel while the ends of their wrappers communicate with the conduits **43***a*, **43***b* via slots **39***a*, **39***b*, channels **127***a* and axial passages **42***a* of the respective plungers **42**). The transducer **49** may be a capacitative transducer using a deformable diaphragm (reference may be had to U.S. Pat. No. 3,412,856 which is owned by the assignee of the present case).

When the testing unit including the structure of FIG. **3** detects a defective wrapper (which allows excessive quantities of air to flow from the interior of the respective cigarette Z into the atmosphere), the transducer **49** furnishes an electric test signal which is transmitted to the input of a time-delay device **50** (e.g., a shift register) which transmits the signal with a certain delay to an amplifier **51** and thereupon to the solenoid of a valve **52** which controls the flow of compressed air in a conduit **54** extending from a source **53** to an ejector nozzle **56.**

The nozzle **56** is adjacent to the path of cigarettes Z and ejects defective cigarettes in response to opening of the valve **52** by the amplifier **51.** The solenoid of the valve **52** receives an "eject" or "segregate" signal with a delay which is necessary to insure that a defective cigarette Z can advance from the testing station (between the slots **39***a*, **39***b*) to the ejecting or segregating station (nozzle **56**).

The second testing unit including the conveyor **31** is preferably identical with the testing unit including the structure of FIG. **3.** The difference is only that the transducer **49** (not shown) of the second testing unit including the conveyor **31** is adjusted in such a way that it furnishes test signals in response to detection of defects in perforated or punctured wrappers of cigarettes Z′. If desired, the second testing unit including the conveyor **31** may comprise a discrete second ejector nozzle **56** or another suitable (e.g., mechanical) ejecting or segregating device. However, it is equally within the purview of the invention to employ a single ejector and to actuate the single ejector in response to test signals from the transducer **49** of the first and second testing units. In fact, if the ejector nozzle **56** is mounted downstream of the conveyor **32** shown in FIG. **1,** it can serve to segregate cigarettes Z or Z′ having defective wrappers (as detected by the first and/or second testing unit) as well as cigarettes Z′ having defective tobacco-containing ends.

It is normally preferred to provide each of the first and second testing units with a discrete ejector to thus insure that the cigarettes Z whose wrappers are defective prior to puncturing need not be conveyed through the unit **30.** Such arrangement is often preferred on the additional ground that cigarettes Z which are defective prior to puncturing can be collected separately from cigarettes Z′ which are defective due to unsatisfactory puncturing in the unit **30.**

The testing unit of FIG. **3** further comprises an indicating or safety arrangement including a signal generator **57** which can furnish visible, audible and/or otherwise detectable signals in response to detection of each defective cigarette or in response to detection of two or more successive defective cigarettes. The provision of the signal generator **57** is particularly desirable in the second testing unit for the wrappers of cigarettes Z′. In the second testing unit, signals furnished by the signal generator **57** are noted by the attendant who thereupon inspects the perforating unit **30** which is likely to be inoperative or otherwise out of commission if the defects are detected by the second testing unit but not by the unit including the conveyor **27.** For example, the device **57** may include a counter which is adjustable to furnish a detectable signal in response to detection of a predetermined number of successive defective cigarettes Z′.

The details of a perforating unit which can be used in the apparatus of the present invention are disclosed, for example, in commonly owned U.S. Pat. No. 3,483,873. The distance between the upper side of the

support **29** and the periphery of the conveyor **28** shown in FIG. **2** is slightly less than the diameter of a cigarette Z so that a cigarette which approaches the support **29** is caused to leave its flute **36** and rolls about its own axis during travel in the gap between the parts **28, 29** of the perforating unit **30.** This insures that, as a rule, each cigarette Z is punctured the same number of times, i.e., that the permeability of its wrapper to the flow of air and/or smoke is increased in the same way as that of each other wrapper except, of course, when the unit **30** fails to operate properly.

The operation is as follows:

Filter cigarettes of double unit length are manufactured in a manner as described above and are thereupon severed by the knife **24***a* so that each thereof yields a pair of coaxial filter cigarettes Z of unit length. One cigarette Z of each pair is inverted during travel with the conveyor **26** and the thus obtained single row of cigarettes Z, with the filter plugs Z*e* of all cigarettes facing in the same direction, is transferred into the flutes **36** of the conveyor **27.** As explained above, the conveyor **27** forms part of a testing unit which serves to detect holes, open seams and similar defects of unperforated wrappers of the cigarettes Z. The test signals furnished by the transducer **49** of the first testing unit are used to expel or segregate the cigarettes Z with defective wrappers at an ejecting station which can be located adjacent to the conveyor **27, 28, 31, 32** or **33.** For example, the ejector nozzle of the first testing unit can expel cigarettes Z having defective wrappers from the flutes **36** of the conveyor **27** immediately upstream of the transfer station between the conveyors **27** and **28.** This insures that cigarettes Z with defective wrappers can be collected independently of cigarettes having other defects or whose wrappers are defective due to unsatisfactory puncturing by the projections **58** of the support **29.**

The once tested cigarettes Z (or at least the once-tested satisfactory cigarettes Z) reach the puncturing station between the conveyor **28** and support **29** and are caused to roll along the upper side of the support to be provided with a predetermined number of perforations or holes for admission of cool atmospheric air during smoking. The cigarettes Z′ with perforated or punctured wrappers are transferred into the flutes **36** of the conveyor **31** and are tested again by the second testing which is similar to or identical with the unit shown in FIG. **3.** This second testing unit determines the permeability of punctured or perforated wrappers and produces test signals which cause the respective nozzle to eject cigarettes Z′ with defective wrappers (i.e., those cigarettes Z′ whose wrappers allow the passage of insufficient or excessive quantities of air). As mentioned above, the device **57** can generate a visible, audible and/or otherwise detectable signal when the second testing unit detects a succession of two or more cigarettes Z′ with defective wrappers. All defective cigarettes Z′ are ejected from the respective flutes **36** of the conveyor **31** or downstream of the conveyor **31,** preferably before the cigarettes Z′ reach the belt **34.** If the nozzle **56** of FIG. **3** is capable of receiving signals from the transducers of both testing units for the wrappers, the nozzle **56** must be installed downstream of the testing station in the second testing unit.

At least the satisfactory cigarettes Z′ are thereupon transferred onto the conveyor **32** and are tested for the condition of the free ends of their tobacco fillers. The cigarettes with defective tobacco filler ends are segregated from satisfactory cigarettes Z′ which are taken over by the transfer conveyor **33** and delivered onto the belt **34** for transport to a further processing station, for example, to a packing machine or to a tray filling apparatus.

The device **57** constitutes a means for indicating the condition of the perforating unit **30.** For example, the device **57** can detect the breakage of one or more projections **58** because such breakage entails the making of fewer perforations in successive wrappers. This is detected by the second testing unit whereby the device **57** produces an appropriate signal which informs the operator that the unit **30** is defective. The operator can replace the damaged or missing projection(s) **58** or replaces the entire support **29** before the machine turns out a large number of defective cigarettes Z′.

An advantage of an apparatus which embodies the two wrapper testing units and the perforating unit **30** is that the apparatus can reliably segregate all defective rod-shaped articles including those which are defective prior to puncturing of their wrappers as well as those with defective punctured or perforated wrappers. In addition, the apparatus including the conveyor **31** can insure detection and segregation of cigarettes Z′ with unsatisfactory tobacco filler ends. Moreover, and especially if the cigarettes Z with defective wrappers are segregated prior to reaching the conveyor **28,** the apparatus can reliably segregate all such cigarettes which are defective before they reach the unit **30** but appear to be satisfactory if the puncturing by the projections **58** is unsatisfactory but enables the wrappers to permit the passage of those quantities of air which are found to be satisfactory by the transducer of the second testing apparatus. It could happen, by coincidence, that a cigarette Z whose wrapper exhibits a leak is improperly punctured or not punctured at all during transport by the conveyor **28** and that the amount of air passing through such leak is the same or nearly the same as the amount of air which passes through all perforations of a properly perforated wrapper. Such cigarettes are not likely to be detected if the first testing unit including the conveyor **27** does not have its own ejector.

Without further analysis, the foregoing will so fully reveal the gist of the present invention that others can, by applying current knowledge, readily adapt it for various applications without omitting features which fairly constitute essential characteristics of the generic and specific aspects of the above-described contribution to the art and, therefore, such adaptations should and are intended to be comprehended within the meaning and range of equivalence of the claims.

What is claimed as new and desired to be protected by Letters Patent is set forth in the appended claims:

1. A method of repeatedly testing the wrappers of cigarettes or analogous articles wherein a tubular wrapper surrounds a rod-like filler of fibrous material or the like, comprising the steps of conveying a succession of articles along a predetermined path; testing the wrappers of successive articles in a first portion of the path including establishing an air pressure differential between the interior and exterior of successive wrappers and producing first test signals indicating the rate of air flow through the wrappers; perforating the wrappers of articles in a second portion of said path so that each of the thus perforated wrappers exhibits a predetermined number of holes therein; and testing successive perfo-

rated wrappers in a third portion of said path including establishing an air pressure differential between the interior and exterior of successive perforated wrappers and producing second test signals indicating the rate of air flow through the wrappers.

2. A method as defined in claim **1**, wherein said perforating step comprises puncturing the wrappers.

3. A method as defined in claim **2**, wherein said puncturing step comprises rolling successive wrappers about their respective axes over an array of projections which penetrate the wrappers.

4. A method as defined in claim **1**, further comprising the step of utilizing said first signals to segregate the respective articles from said path when such first signals indicate a rate of air flow which is without a predetermined range.

5. A method as defined in claim **1**, further comprising the step of utilizing said second signals to segregate the respective articles from said path when such second signals indicate a rate of air flow which is without a predetermined range.

6. Apparatus for repeatedly testing the wrappers of cigarettes or analogous articles wherein a tubular wrapper surrounds a rod-like filler or fibrous material or the like, comprising means for advancing a succession of articles along a predetermined path; means for establishing an air pressure differential between the interior and exterior of successive wrappers in a first portion of said path; means for producing first test signals indicating the rate of air flow through successive wrappers in said first portion of said path; means for perforating successive wrappers which enter a second portion of said path so that each perforated wrapper exhibits a predetermined number of holes therein; means for establishing an air pressure differential between the interior and exterior of successive perforated wrappers in a third portion of said path; and means for producing second test signals indicating the rate of air flow through the wrappers in said third portion of said path.

7. Apparatus as defined in claim **6**, wherein said advancing means comprises a plurality of endless conveyors.

8. Apparatus as defined in claim **7**, wherein said conveyors comprise rotary drums having axially parallel article receiving flutes.

9. Apparatus as defined in claim **6**, wherein said advancing means comprises discrete first, second and third rotary drum-shaped conveyors respectively defining said first, second and third portions of said path.

10. Apparatus as defined in claim **6**, wherein said perforating means comprises a plurality of projections adjacent to said second portion of said path and said advancing means comprises a conveyor cooperating with said projections to roll successive wrappers over said projections.

11. Apparatus as defined in claim **6**, further comprising means for segregating articles from said path in response to said first signals when the rate of air flow indicated by said first signals is without a predetermined range.

12. Apparatus as defined in claim **6**, further comprising means for segregating articles from said path in response to said second signals when the rate of air flow indicated by said second signals is without a predetermined range.

13. Apparatus as defined in claim **6**, further comprising means for indicating the condition of said perforating means.

14. Apparatus as defined in claim **13**, wherein said indicating means comprises means for generating third signals in response to production of a predetermined number of second signals indicating a rate of air flow which is without a predetermined range.

* * * * *