United States Patent [19]

Coleman

[11] **3,842,714**

[45] **Oct. 22, 1974**

[54] **COMBINE HYDRAULIC VALVE**

[75] Inventor: **Martin W. Coleman,** Independence, Mo.

[73] Assignee: **Allis-Chalmers Corporation,** Milwaukee, Wis.

[22] Filed: **Jan. 22, 1973**

[21] Appl. No.: **325,957**

[52] **U.S. Cl.** **91/459,** 91/414, 60/DIG. 2, 60/471

[51] **Int. Cl.** **F15b 13/044**

[58] **Field of Search** 91/414, 459; 60/DIG. 2, 60/471

[56] **References Cited**

UNITED STATES PATENTS

2,318,851	5/1943	Griffith	60/97 P
2,425,391	12/1947	Parsons	60/DIG. 2
2,643,515	6/1953	Harsch	91/414
2,984,985	5/1961	MacMillin	60/97 P
3,494,258	2/1970	Harms et al.	91/459
3,550,506	12/1970	Gardenhour	91/414
3,793,831	2/1974	Khatti	91/414

Primary Examiner—Edgar W. Geoghegan
Assistant Examiner—William F. Woods
Attorney, Agent, or Firm—Kenneth C. McKivett

[57] **ABSTRACT**

A control valve consisting of two-way normally closed solenoid poppet valves and two stage normally open solenoid poppet valves. The normally closed solenoid valves are arranged to direct flow to and from a cylinder in the desired manner. For the control of each single acting cylinder, one normally closed solenoid valve is required, whereas, for a double acting cylinder, four normally closed solenoid valves are needed. These sets of solenoid valves are incorporated in a single body or manifold to control the different functions on a combine such as reel height, reel speed, auger swing and traction drive. The control valve also includes a low flow circuit relief valve set at 2,000 psi and a 600 psi solenoid valve functioning as a relief valve to satisfy maximum pressure conditions for reel speed operation. The valve is located near to a supply pump and the pump flow passes through the normally open two-way solenoid valve and back to sump to minimize pressure drop in neutral.

2 Claims, 4 Drawing Figures

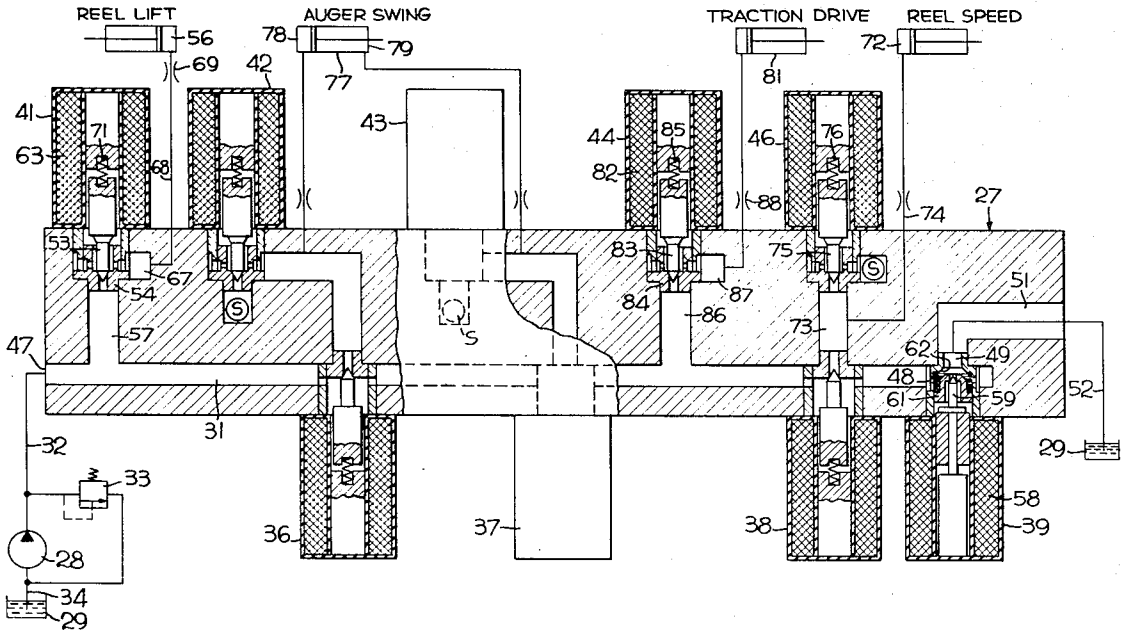

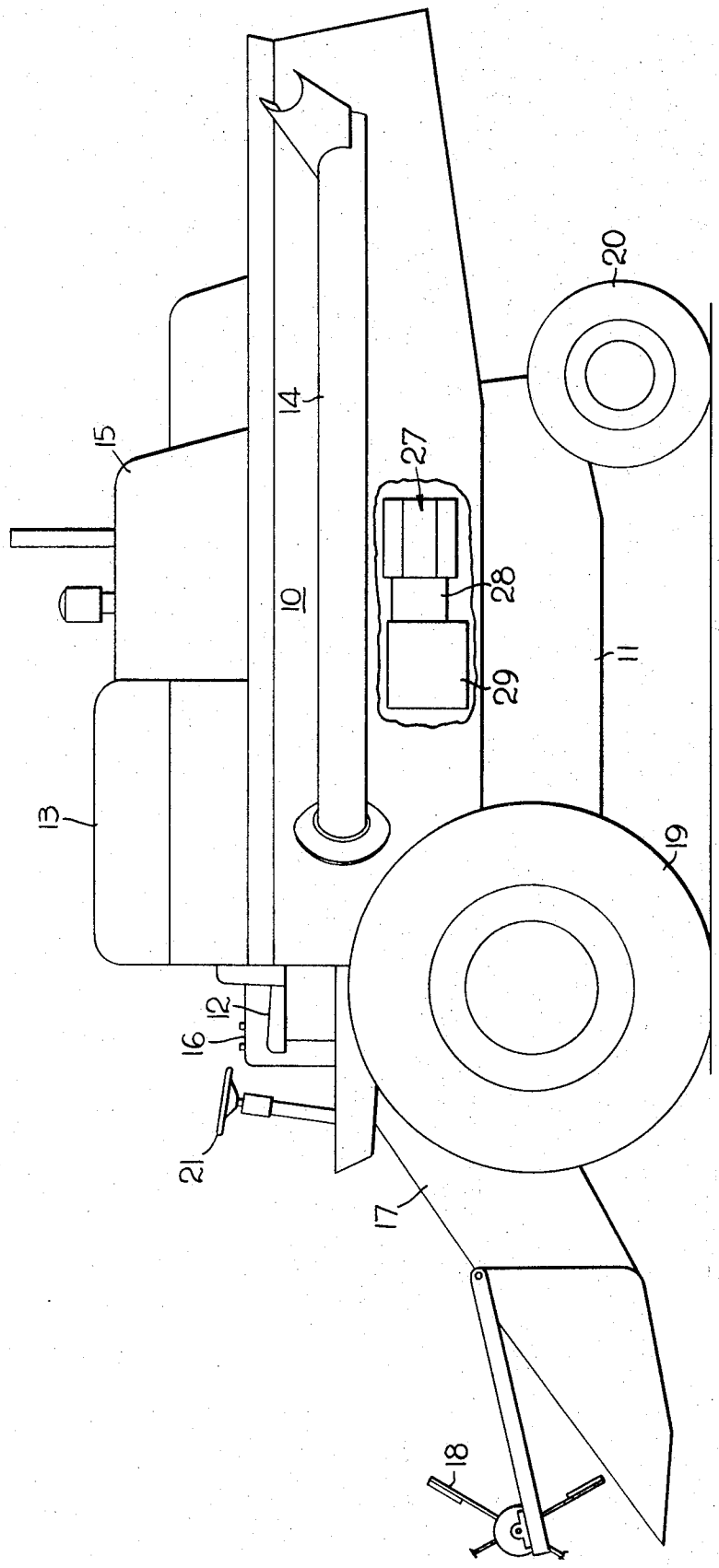

Fig. 1

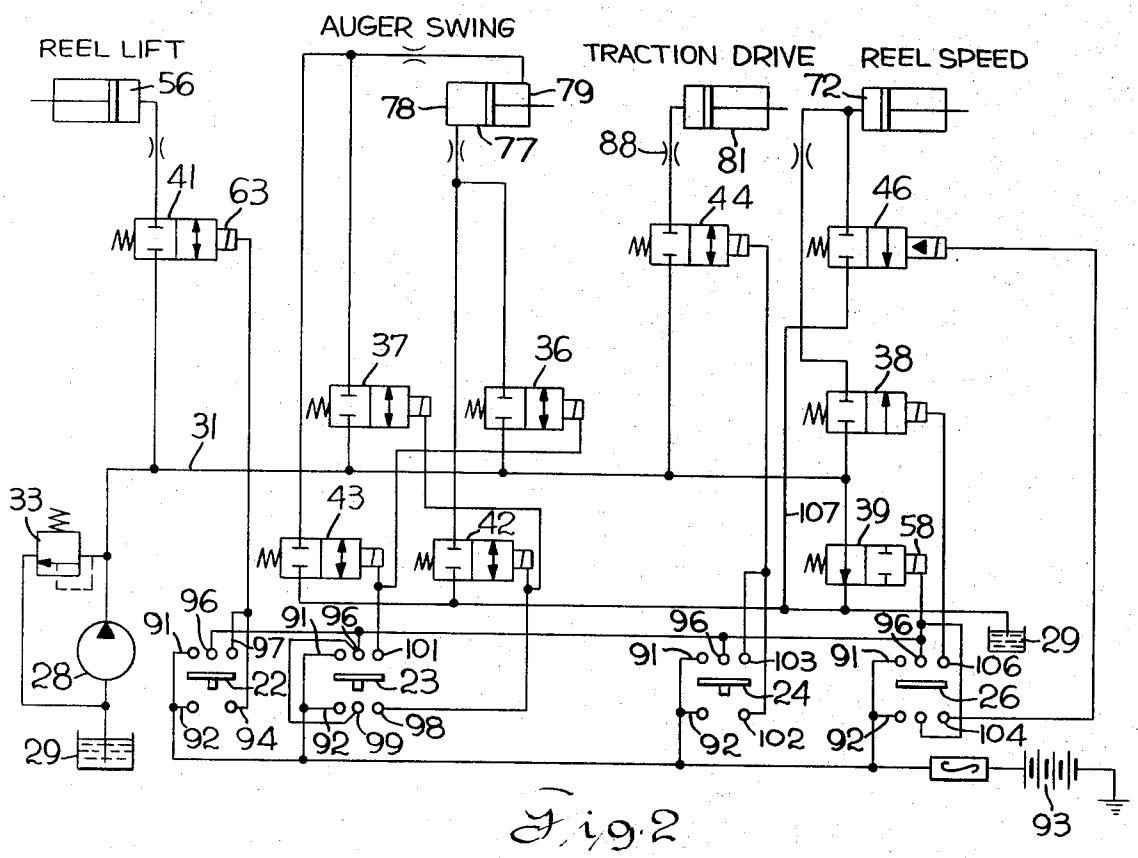

Fig. 2

TO OPERATE VALVE		ENERGIZE SOLENOIDS
REEL LIFT	RAISE	39 + 41
	LOWER	41
AUGER SWING	UP	36, 39 + 43
	BACK	37, 39 + 42
TRACTION DRIVE	FASTER	39 + 44
	SLOWER	44
REEL SPEED	RAISE	38 + 39
	LOWER	39 + 46

Fig. 4

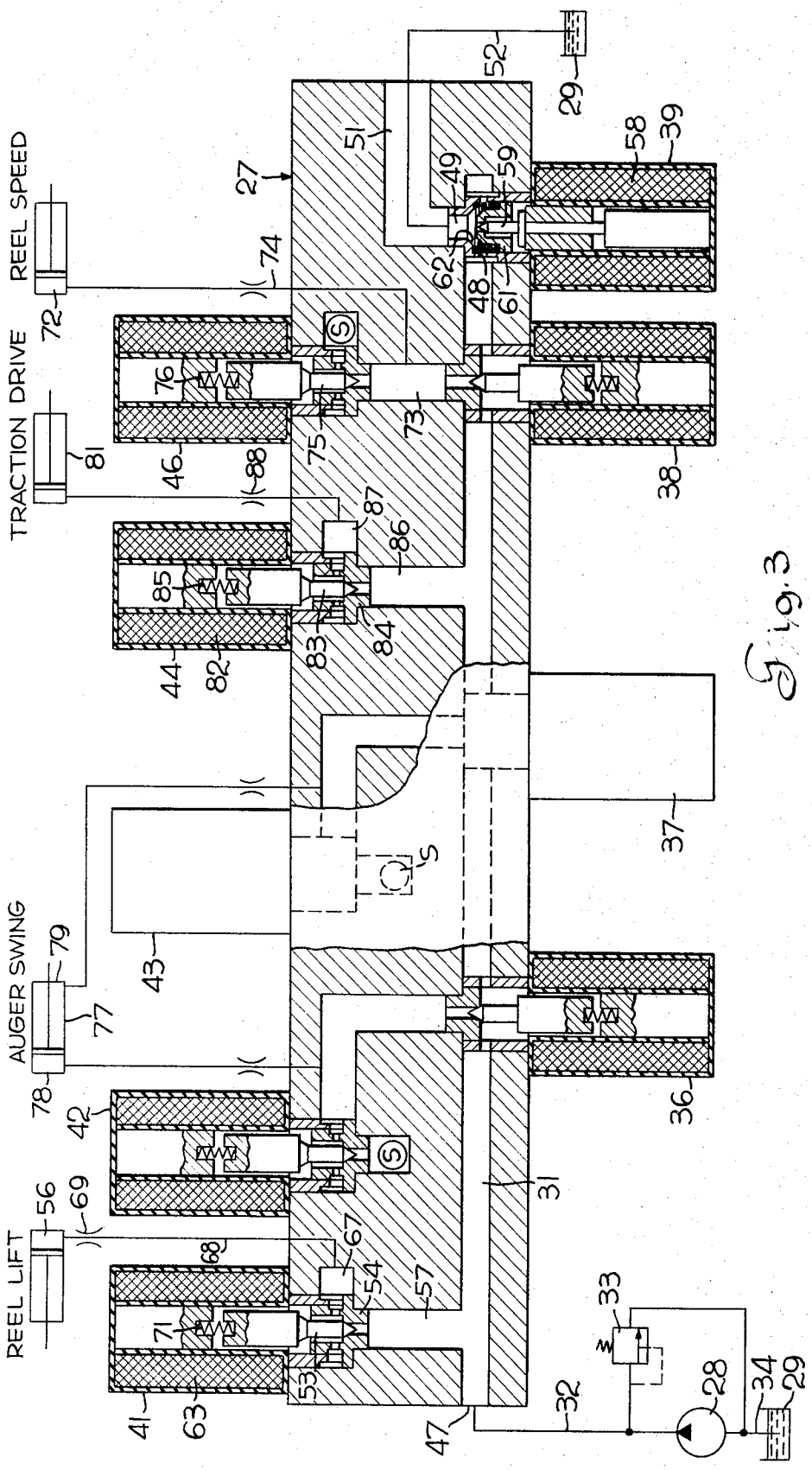

Fig. 3

COMBINE HYDRAULIC VALVE

CROSS REFERENCE TO RELATED APPLICATION

This invention is an improvement over the combine control shown in copendng U.S. application Ser. No. 260,741, filed June 8, 1972, now Pat. No. 3,793,831.

BACKGROUND OF THE INVENTION

In a combine there are a number of power operated devices which must be controlled by an operator at a remote operator's station. It has been found desirable to employ a hydraulic control system in which some devices are controlled at a high pressure level and at least one device is controlled at a low pressure level. In order to increase the efficiency of the system, it has heretofore been proposed to use an electric over hydraulic system (such as shown in U.S. Pat. No. 3,793,831) wherein a control manifold, with electrically operated solenoid valves, is placed near the pump and electric switches for controlling the electrically operated valves are placed in a console at the operator's station. In such prior art control system, a separate relief valve is placed in one branch circuit to establish a lower pressure level for one control motor.

SUMMARY OF THE INVENTION

The electric over hydraulic control system of this invention includes a hydraulic manifold having two pairs of normally closed solenoid valves controlling flow to a double acting hydraulic cylinder without the need of separate check valves. Another feature of this invention is a combine control in which a single acting hydraulic cylinder is controlled by a pair of normally closed solenoid valves one of which serves (1) as a relief valve when not energized and (2) as a dumping valve (to achieve a control function) when energized.

An object of this invention is to provide an improved electrohydraulic control valve for controlling functions performed by single and double acting cylinders in an open center hydraulic system in a combine harvester.

Another object of this invention is to provide an inexpensive electrohydraulic control valve that will perform the functions of three-way and four-way spool valves with lockout check valves on mobile equipment.

Another object of this invention is to provide two-way solenoid valves in an open center hydraulic circuit to perform functions previously performed by three and four-way spool valves with lockout check valves.

Another object of this invention is to provide a hydraulic system wherein solenoid valves provide one or more functions at lower pressure than system pressure.

A further object of this invention is to provide a hydraulic circuit having a hydraulic cylinder and utilizing solenoid valves and in which each solenoid valve works as a directional control valve to control direction of flow and as a check valve to a) isolate each function from the others in the circuit; and b) hold the hydraulic cylinder in activated position.

BRIEF DESCRIPTION OF THE DRAWINGS

Referring to the drawings:

FIG. 1 is a side elevation of a combine harvester embodying the invention;

FIG. 2 is a schematic view of the invention;

FIG. 3 is a section view through the valve body partially shown schematically; and

FIG. 4 is a summary of functions provided by various combinations of the solenoid valves.

DETAILED DESCRIPTION OF THE DRAWINGS

Referring to FIG. **1**, the invention is embodied in a self-propelled combine harvester **10** having a main frame **11** providing an operator station **12**, a grain tank **13** provided with a swingable grain unloading auger **14**, an internal combustion engine **15**, an operator's control console **16** and a harvesting and threshing and cleaning mechanism **17** including a reel **18** mounted on the forward end of combine **10**. The foregoing are supported at the forward end of frame **11** on traction wheels **19** which are operatively connected to engine **15** by conventional means (not shown). The rearward end of the combine **10** is supported on dirigible wheels **20** operatively connected to steering wheel **21**.

Mounted in the operator's console **16** is a group of electrical switches **22, 23, 24** and **26** (FIG. **2**) which are positioned for easy manipulation by the operator when positioned at station **12** (FIG. **1**).

A valve body or hydraulic manifold **27** is positioned centrally on frame **11** in reasonably close relation to pump **28**, sump **29** and the functions of the combine to be hydraulically controlled. Pump **28** is operatively connected to engine **15** by conventional means (not shown). Valve body **27** (FIG. **3**) is provided with a main passage **31** connected at one end to conduit **32** to provide a passage between pump **28** and main passage **31**. A conventional relief valve **33** is interposed between conduit **32** and conduit **34** leading from sump **29** to pump **28**.

Solenoid valves **36, 37, 38, 39, 41** and **42** are mounted in valve body **27** in communication with main passage **31**. Solenoid valves **43, 44** and **46** are also mounted in valve body **27** in communication with main passage **31**. Consider solenoid valve **36** which is a normally closed direct acting solenoid valve and normally open two stage solenoid valve **39** are arranged as shown in FIG. **3**. For the present discussion, consider that only these two valves are installed in the valve body **27** and the other valves are not present in FIG. **3**.

Pump **28** is connected to the valve inlet port **47** of main passage **31**. The pump flow with none of the switches **22–26** (FIG. **2**) actuated is as follows: the flow (FIG. **3**) goes through passages **31, 48, 49, 51** and line **52** to the sump **29**. Plunger **53** in solenoid valve **41** seats tight on the seat **54** and blocks the passage of flow from a motor or cylinder **56** to a motor passage or cavity **57**. Valve **41** serves as a lock or check valve to hold cylinder pressure constant and also serves as a directional control valve to direct flow from cylinder **56** to cavity **57**.

To extend reel lift cylinder **56**, solenoid valves **39** and **41** are energized by pushing switch **22** upwardly. When coil **58** (FIG. **3**) of solenoid valve **39** is energized, plunger **59** thereof moves and seats on poppet **61** which in turn moves together with plunger **59** and seats on valve seat **62** blocking flow between passages **48** and

49. The flow from pump 28 is now blocked from sump 29 and is available for any of the functions comprehended by the valves in valve body 27. The energization of coil 63 of valve 41 causes plunger 53 to move away from seat 54 allowing hydraulic fluid to flow from passage 47 to cavity 57. When the pressure in cavity 57 exceeds the pressure in cylinder 56, the pump flow passes through passage 67, 68 and orifice 69 to cylinder 56. Orifice 69 controls the rate at which the piston of cylinder 56 extends or retracts. Excess flow, when orifice 69 is controlling the rate at which the piston of cylinder 56 extends, goes over the relief valve 33.

De-energizing coil 63 will remove holding force from plunger 53 and spring 71 will force plunger 53 to position itself on seat 54 blocking passage 67 to passage 57. When coil 58 of solenoid valve 39 is de-energized, plunger 59 will move away from poppet 61 which moves away from seat 62 allowing the flow from pump 28 to go to sump 29. This puts valve 39 back into neutral position. In this neutral position, reel lift cylinder 56 goes into hold position and the spring 71 holds the plunger 53 on seat 54 of solenoid valve 41 which acts as a lock valve.

To retract cylinder 56, solenoid valve coil 63 of solenoid valve 41 is energized by depressing switch 22 (FIG. 2) resulting in plunger 53 (FIG. 3) being pulled away from seat 54 against spring 71. Plunger 53 moves away from seat 54 allowing hydraulic fluid from cylinder 56 to go to cavity 57. Oil flows from cavity 57 through passages 31, 48, 49 and 51 and line 52 back to sump 29. As soon as coil 63 of solenoid valve 41 is de-energized, spring 71 forces plunger 53 on seat 54 blocking flow from cylinder 56 to cavity 57.

The steps described above illustrate complete operation of the reel lift section of the valve. The valve also has a traction drive section and a reel speed section which are identical to the reel lift operation and a repeat of describing such operation is not deemed necessary excepting that the reel speed function is carried on at 600 psi maximum pressure whereas the other functions, including the reel lift and traction drive, are at 2,000 psi. In the reel speed control operation, solenoid valves 38 and 46 are arranged as shown in FIG. 3. Operation of this valve section is identical to the operation of the reel lift cylinder section in that when solenoids 38 and 39 are energized to extend the reel speed cylinder 72, hydraulic fluid flows from pump 28 through valve 38, cavity 73 and line 74 to cylinder 72. Pressure in cavity 73 is sensed by solenoid valve 46 functioning as a relief valve and which regulates the pressure in cavity 73 at 600 psi. However, this does not affect the system pressure which is regulated by a relief valve 33 at 2,000 psi. During operation of functions other than reel speed, solenoid valve 38 isolates cavity 73 from passage 31. If the pressure in cavity 73 exceeds 600 psi, plunger 75 retracts against spring 76 permitting flow of fluid to sump 29 maintaining pressure of 600 psi in cavity 73.

The auger swing section has a double acting cylinder 77 and operation of the auger swing is accomplished by solenoid valves 36, 37, 42 and 43.

Energizing solenoid valves 39, 36 and 43 will cause hydraulic fluid to flow through valve 36 to the auger swing cylinder piston end 78. Fluid from rod end 79 of the cylinder 77 will flow through valve 43 back to sump 29 and the cylinder 77 will extend. As soon as solenoid valves 39, 36 and 43 are de-energized, cylinder 77 will go into hold position and be held by solenoid valves, 36, 37, 42, and 43.

When solenoid valves 39, 37 and 42 are energized, hydraulic fluid moves from pump 28 through valve 37 to the auger swing cylinder rod end 79. Hydraulic fluid from the base end 78 goes to the sump 29 through solenoid valve 42 and cylinder 77 retracts. Cylinder 77 goes into the previously described hold position as soon as the solenoid valves are de-energized.

Similar sections as described above, could be added to valve body 27 by inserting additional sets of valves arranged in the same way as the auger swing section.

FIG. 3 shows the valve body 27 connected in an open center system. Pump 28 supplies hydraulic fluid into valve body 27 at inlet port 47 and such hydraulic fluid flows through passages 31, 48, 49, 51 and line 52 back to sump 29. Whenever normally open valve 39 is energized, pump flow is blocked from returning to sump 29 and pressure fluid becomes available to all sections of valve body 27. Solenoid valves 41, 36, 37, 42 and 44 act as check valves and they isolate each section from the other. Any of the functions available in the valve housing 27 can be operated as previously described without affecting the rest of the functions.

In neutral, solenoid valves 41, 42, 37 and 38 act as lock valves and hold the pressures in the respective cylinders. When these solenoid valves are energized, they act as directional control valves and direct flow from the pump to the cylinder or vice-versa. Thus, both the functions of lock or check valve and that of directional control valve are accomplished by the unique arrangement shown in FIG. 3. Solenoid valve 44 forms the traction drive section and this section functions exactly as the reel lift section was described as functioning; namely: to extend traction drive cylinder 81, solenoid valve 44 is energized by raising switch 24 (FIG. 2). When coil 58 (FIG. 3) of solenoid valve 39 is energized, plunger 59 moves and seats on poppet 61 which in turn moves together with plunger 59 and seats on valve seat 62 closing the passage between 48 and 49. The flow of pump 28 is now blocked from the sump 29 and is available for any of the functions in the valve. When coil 82 of the solenoid valve 44 is energized, plunger 83 moves away from seat 84 allowing hydraulic fluid to flow from passage 31 through passage 86 to cavity 87. When pressure in cavity 87 exceeds cylinder pressure, such pressure fluid passes through passages 86, 87 and orifice 88 to cylinder 81. Orifice 88 controls the rate at which cylinder 81 extends or retracts. Excess flow, when orifice 88 is controlling the rate at which cylinder 81 extends, goes over relief valve 33.

De-energizing coil 82 will remove the holding force from plunger 83 against the bias of spring 85 and spring 85 will force the plunger 83 to position on seat 84 blocking the passage from 86 to 87. When coil 58 of solenoid valve 39 is de-energized, plunger 59 will move away from poppet 61 which moves away from seat 62 allowing pump flow to go to sump 29. This puts the valve back into neutral position. In neutral, traction drive cylinder 81 goes into hold position and is held on poppet seat 84 of solenoid valve 44 which acts as a lock valve.

To retract cylinder 81, solenoid coil 82 is energized which pulls plunger 83 away from seat 84 against spring 85. Plunger 83 moves away from seat 84 allowing hydraulic fluid from cylinder 81 to go to cavity 87. Hydraulic fluid flows from cavity 87 through passages 86,

31, 48, 49, 51 and line **52** back to sump **29.** As soon as coil **82** of solenoid valve **44** is de-energized, spring **85** forces plunger **83** on to seat **84** blocking flow from cylinder **81** to cavity **87** and valve **39** goes into neutral.

Referring to FIG. **2,** each of the switches **22, 23, 24** and **26** are shown to be of a double throw type. Each switch is provided with an upper connection **91** and a lower connection **92** leading to electrical power source **93** on combine **10.** Switch **22** is provided with a lower lead **94** connected to the coil **63** of solenoid **41** so that by depressing switch **22** coil **63** is energized. Switches **22, 23, 24** and **26** are also provided with an upper contact **96** which is connected to the coil **58** of solenoid **39.** Switch **22** is also provided with an upper lead **97** connected to the coil **63** of solenoid **41** so that by moving switch **22** upwardly power is supplied to lines **96** and **97** for energizing solenoids **39** and **41.**

Switch **23** is provided with a lower contact **98** connected to the coil of solenoid **42** and the coil of solenoid **37** and switch **23** is also provided a lower contact **99** connected to contact **96** so that when switch **23** is depressed solenoids **37, 39** and **42** are actuated for connecting the rod end **79** of cylinder **77** with line **31** and a source of hydraulic fluid and the piston end **78** of cylinder **77** is connected up with sump **29,** respectively. Switch **23** is also provided with an upper contact **101** connected to the coils of solenoid valves **36** and **43** so that when switch **23** is raised valves **36, 39** and **42** are actuated, the rod end **79** of cylinder **77** is connected to sump **29** and the piston end **78** is connected to line **31** for receiving hydraulic fluid from pump **28.**

Switch **24** is provided with lower contact **102** connected to the coil of solenoid valve **44** so that when switch **24** is depressed solenoid **44** is energized connecting cylinder **81** with line **31** for return to sump **29.** Switch **24** is also provided with an upper contact **103** so that when switch **24** is raised solenoids **39** and **44** are energized and hydraulic fluid flows from pump **28** to cylinder **81** extending same.

Switch **26** is provided with lower contact **104** connected to the coil of solenoid valve **46** so that when switch **26** is depressed solenoid **46** is actuated to connect cylinder **72** with sump **29.** Switch **26** is also provided with an upper contact **106** so that when switch **26** is raised solenoids **39** and **38** are energized and hydraulic fluid flows from pump **28** to cylinder **72** extending same.

The engine on a combine must so run as to maintain constant speed on the threshing and separating mechanisms. The ground speed, however, must be variable in minute increments as crop conditions vary. This speed variation is accomplished by a three-speed transmission driven through a variable diameter sheave arrangement. The effective diameter of the driven sheave is increased by a single acting hydraulic cylinder **81** and decreased by a spring in a conventional manner (not shown). To increase the combine speed, an electrical signal is sent from operator's station **12** to solenoid members **39** and **44** by raising switch **24.** When solenoid member **39** closes it causes the normally open poppet **61** to close blocking the flow through valve **39.** When this happens pressure builds up in the valve to approximately 2000 psi when relief valve **33** upstream relieves. Because solenoid **44** is also energized, it opens allowing hydraulic fluid to flow through orifice **88** to the traction drive cylinder **81.** When the electrical signal from switch **24** is taken away, solenoid **44** closes trapping the hydraulic fluid in the traction drive cylinder **81** and maintaining that position of the variable diameter sheave arrangement and consequently, the speed of the vehicle. With no electrical signal, solenoid member **39** reopens and the hydraulic fluid is again free to circulate past solenoid **39** and deposit in sump **29.** To slow down the traction speed, an electrical signal is sent to solenoid **44** by depressing switch **24** at the operator's station **12,** this causes an opening of solenoid valve **44** and allowing the spring load to force the hydraulic fluid out of cylinder **81** through valve **44** and through valve **39** where it moves to sump **29.**

The reel height on the combine is maintained by a master-slave arrangement with only the master cylinder **56** being shown (FIG. **2**). To raise the reel **18** solenoid members **39** and **41** are energized by pressing up on switch **22.** This allows hydraulic fluid exerting a 2000 psi pressure to move past solenoid **41** to the reel lift cylinder **56.** The reel **18** (FIG. **1**) is held in its desired position by solenoid **41** reclosing when the electrical signal is removed. When it is desired to lower reel **18** an electrical signal is transmitted to solenoid **41** by depressing switch **22** at the operator's station. This results in the opening of solenoid **41** and permitting hydraulic fluid in ram **56** to exit through solenoid **41** into line **31** and through solenoid **39** to sump **29.**

The unloading auger **14** is moved into operative bin unloading position by a double acting cylinder **77.** To swing auger **14** into such unloading position switch **23** is actuated upwardly at the operator's station **12.** This energizes solenoids **36, 39** and **43.** The closing of solenoid **39** causes a pressure build-up in line **31** which causes hydraulic fluid to move through now open solenoid **36** to extend hydraulic cylinder **77.** Hydraulic fluid from rod end **79** of cylinder **77** passes through now open solenoid valve **43** to be deposited in sump **29.** When auger **14** has been swung to its operating position, it can be maintained in this position by interrupting the electrical signal from switch **23.** Such interruption causes solenoid **39** to move to an open position connecting line **31** with sump **29** and causes solenoids **36** and **43** to move to closed positions trapping the hydraulic fluid in both ends of cylinder **77.** When it is desired to return auger **14** to its transport position alongside combine **10,** switch **23** is depressed actuating solenoids **37, 39** and **42.** The closing of solenoid **39** causes a pressure build-up in line **31** which causes hydraulic fluid to move through now open solenoid **37** to retract hydraulic cylinder **77.** Hydraulic fluid from piston end **78** of cylinder **77** passes through now open solenoid valve **42** to be deposited in sump **29.** When auger **14** has been swung to its transport position, it can be maintained in this position by interrupting the electrical signal from switch **23.** Such interruption causes solenoid **39** to move to an open position connecting line **31** with sump **29** and causes solenoids **37** and **42** to move to closed positions trapping the hydraulic fluid in both ends of cylinder **77.**

The speed of reel **18** is controlled by a conventional variable diameter sheave drive (not shown) which by its design is limited to 600 psi. This drive provides very little return force. This requirement has been met by the addition of a solenoid **46** which acts as a relief valve and unloading device. The poppet load orifice size relationship is such that the poppet will unseat and act as a direct acting relief valve at 600 psi. To increase the reel speed solenoids **38** and **39** are energized by press-

ing up on switch **26.** The closing of solenoid **39** results in a build-up of pressure in line **31** which pressure fluid pressurizes reel speed cylinder **72.** This pressure is relieved to 600 psi by solenoid **46.** To slow the reel down, solenoids **39** and **46** are energized. Solenoid **39** closes stopping the flow of hydraulic fluid to sump **29.** The magnetic load at solenoid **46** unseats the 600 psi relief and allows the reel speed return hydraulic fluid to flow through an empty line **107** to sump **29.** This allows the system to operate at 600 psi with very low return pressures. The closing of solenoid valve **39** prevents dumping of fluid from the main passage **31** to sump by way of the common sump return passage, shown schematically in FIG. **2,** thus allowing a low fluid return pressure for reel speed motor **72;** however, it is of course possible to exhaust fluid from motor **72** by opening solenoid valve **46** without closing valve **39.**

The embodiments of the invention in which an exclusive property or privilege is claimed are defined as follows:

1. In combination in a self-propelled combine harvester having a control console positioned at an operator's station, said combine being provided with a hydraulic system including a pump and a sump, the improvement comprising:

a double acting hydraulic cylinder,

a hydraulic manifold having a main passage connected in fluid receiving relation to said pump and in fluid delivery relation to said sump and having a pair of supply passages operatively connecting opposite ends of said cylinder to said main passage, said manifold being positioned in remote relation to said console and proximate to said pump and sump to provide a minimum passage of hydraulic fluid between said pump and sump when said hydraulic cylinder is not being operated,

a normally open solenoid valve mounted on said manifold and connected to said main passage, said normally open solenoid valve having an open position permitting hydraulic fluid to pass from said main passage to said sump and a closed position blocking fluid from flowing from said main passage to said sump,

a first pair of normally closed solenoid valves mounted on said manifold and connected respectively in controlling relation to said supply passages, said first pair of normally closed solenoid valves opening when energized to permit fluid flow in said supply passages, respectively, between said main passage to said cylinder, said first pair of normally closed solenoid valves being operative when not energized to prevent flow of fluid through said supply passages from said cylinder to said main passage,

a second pair of normally closed solenoid valves connected respectively to said supply passages and operable to control flow of fluid therefrom to said sump, said second pair of normally closed solenoid valves when opened being operative to pass fluid from said cylinder to said sump without it passing through said main passage, and

a plurality of switches positioned in said control console for controlling said solenoid valves and so connected to the latter whereby upon closing of selected switches on said console said normally open solenoid valve will be closed permitting buildup of hydraulic pressure in said main passage and upon subsequently opening one of said first pair of normally closed solenoid valves associated with one of said supply passages and opening the one of said second pair of normally closed solenoid valves associated with the other of said supply passages, fluid is delivered to one end of said cylinder and exhausted from the other.

2. In combination in a self-propelled combine harvester having a control console positioned at an operator's station, said combine being provided with a hydraulic system including a pump, a sump and a plurality of hydraulically operated devices including a hydraulic motor, the improvement comprising:

a hydraulic manifold having

a main passage connected in fluid receiving relation to said pump and in fluid delivery relation to said sump and

a motor passage connected at one end to said main passage and having its other end connected to said motor,

a normally open solenoid valve mounted on said manifold connected in controlling relation to said main passage, said normally open solenoid valve having an open position permitting hydraulic fluid to pass from said pump to said sump by way of said main passage and a closed position blocking fluid from flowing from said pump to said sump by way of said main passage,

a first normally closed solenoid valve mounted on said manifold and connected in controlling relation to said motor passage, said first normally closed solenoid valve functioning when not energized as a check valve preventing return flow from said motor through said motor passage and opening when energized to permit fluid flow in said motor passage between said main passage and said motor,

a first relief valve operatively connected to the output side of said pump to establish a relatively high operating pressure for said main passage of said manifold when said normally open solenoid valve is closed,

a second normally closed solenoid valve interconnected between said motor passage and said sump and including a spring biased valve plunger operating as a second relief valve when said second valve is not energized, said second valve establishing a lower operating pressure for said motor passage than that established for said main passage by said first relief valve, and

a plurality of switches positioned in said control console for controlling said solenoid valves and connected to the latter whereby upon closing of selected switches on said console said first normally open solenoid valve will be closed permitting buildup of hydraulic pressure in said main passage and upon subsequently opening said normally closed solenoid valve pressurized hydraulic fluid is supplied through said normally closed solenoid valve and said motor passage to said one hydraulic motor causing said motor to be operated in one direction, and fluid being permitted to flow to sump from said motor by way of said motor passage without passing through said main passage when a selected switch in said control console is operated to energize said second normally closed solenoid valve thereby causing the latter to open.

* * * * *