United States Patent [19]

Maurice

[11] **3,832,084**

[45] **Aug. 27, 1974**

[54] **PIVOT FOR ROTATING MOLECULAR PUMPS**

[75] Inventor: **Louis Maurice,** Paris, France

[73] Assignee: **Compagnie Industrielle Des Telecommunications Cit-Alcatel,** Paris, France

[22] Filed: **Nov. 16, 1972**

[21] Appl. No.: **307,231**

[30] **Foreign Application Priority Data**

Nov. 16, 1971 France 71.40995

[52] **U.S. Cl.** **415/90,** 308/9, 308/36.3, 417/424

[51] **Int. Cl.** **F01d 1/36**

[58] **Field of Search** 415/90; 417/424; 308/9, 308/36.3

[56] **References Cited**

UNITED STATES PATENTS

2,730,297	1/1956	Dorsten et al.	415/90
3,168,977	2/1965	Garnier et al.	415/90
3,189,264	6/1965	Becker	415/90
3,628,894	12/1971	Ferguson, Jr.	415/90

FOREIGN PATENTS OR APPLICATIONS

1,023,679	1/1958	Germany	415/90
1,203,718	1/1960	France	415/90
1,284,111	1/1962	France	415/90

Primary Examiner—C. J. Husar
Attorney, Agent, or Firm—Craig & Antonelli

[57] **ABSTRACT**

Pivot for rotating molecular pumps comprising a stator element fixed to the stator of the pump, a rotor element coupled to the rotor of the pump, and in the space comprised between the rotor and stator elements, a dynamic molecular seal, a dynamic viscous seal, several gas bearings, a gas stop and a gas counter-stop.

24 Claims, 5 Drawing Figures

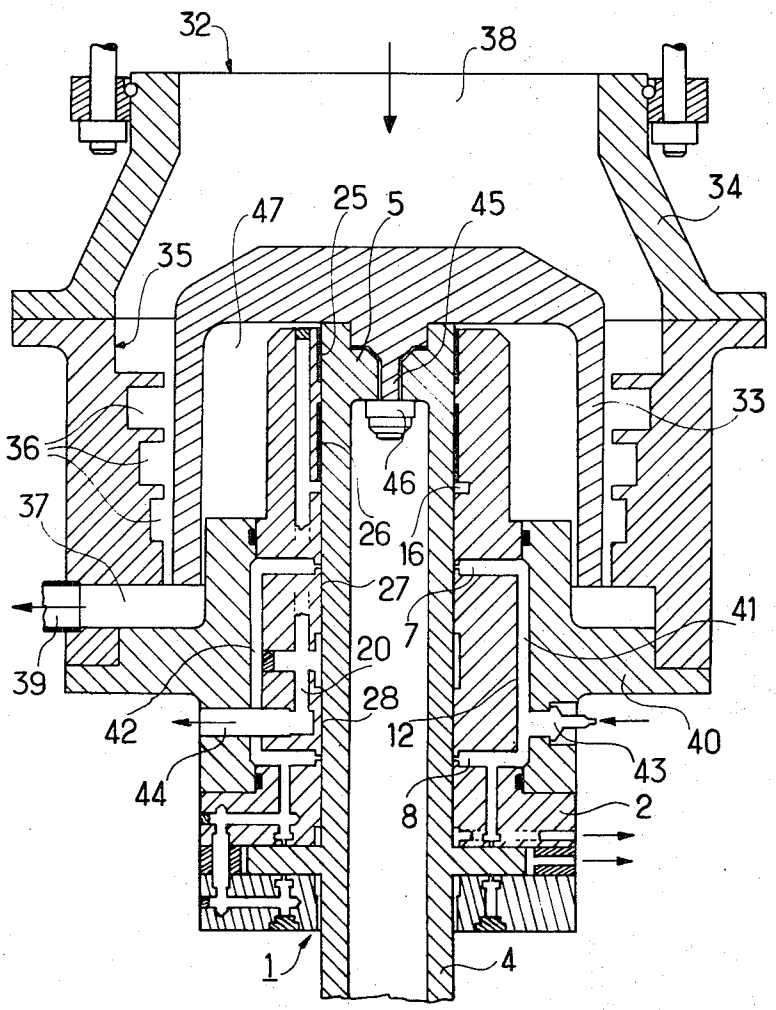

FIG. 1

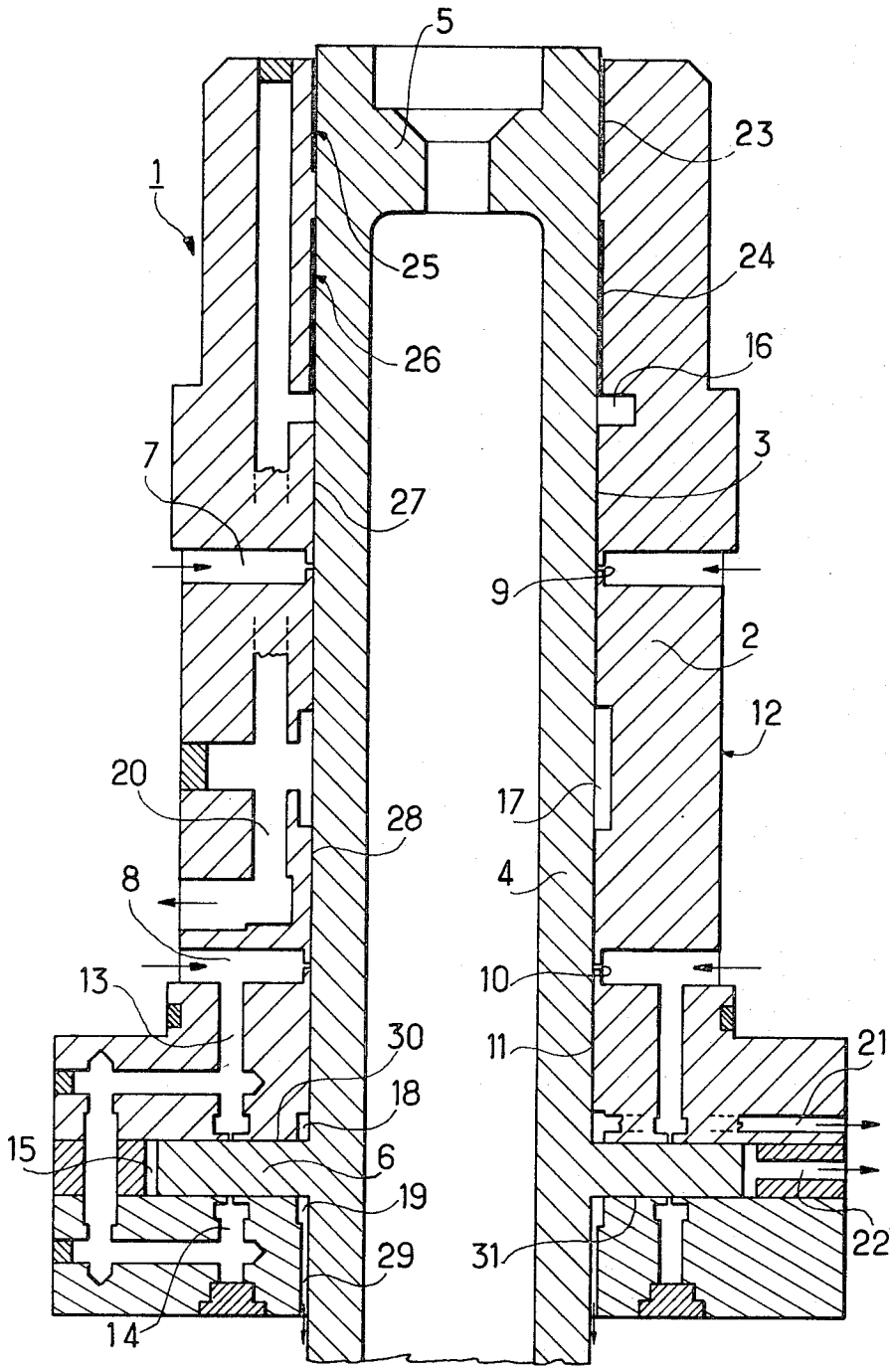
5
23
1
25
24
26
16
7
3
27
9
2
12
20
17
28
4
8
13
10
30
11
21
18
15
6
19
22
29
31
14

FIG. 2

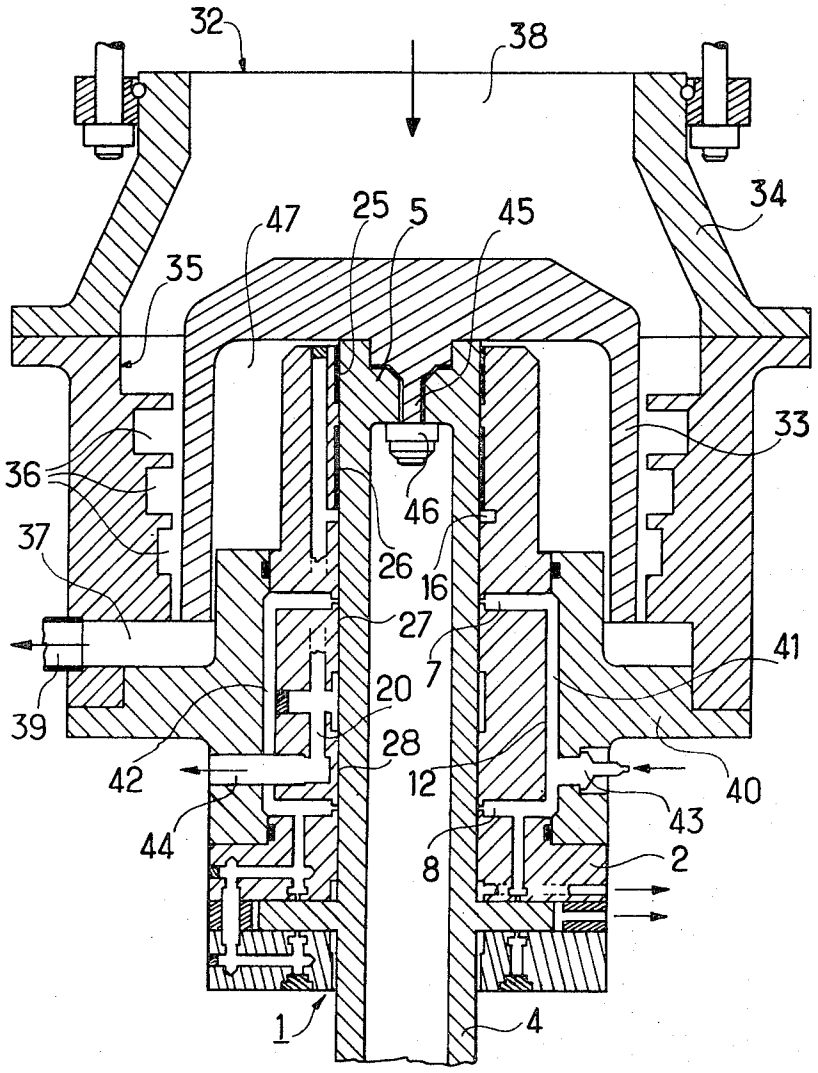
32
38
34
47
25
5
45
35
33
36
46
37
26
16
27
41
7
39
20
28
42
12
40
43
44
8
2
1
4

FIG.3

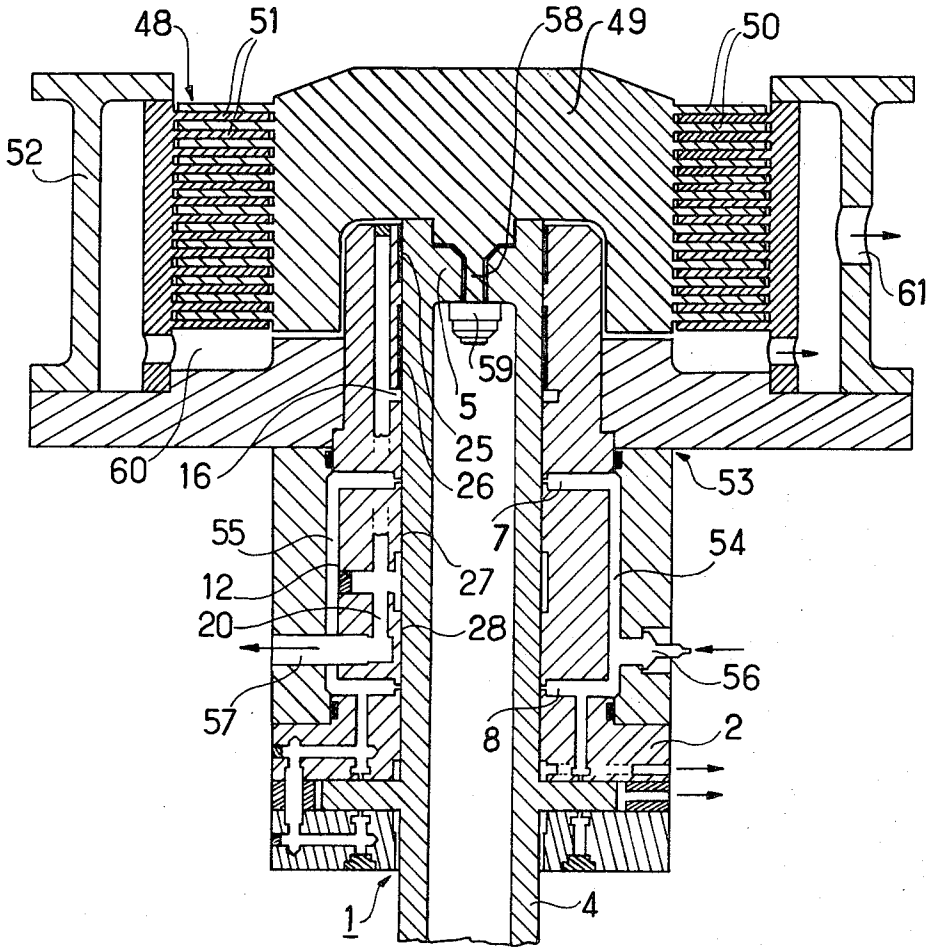

FIG. 4

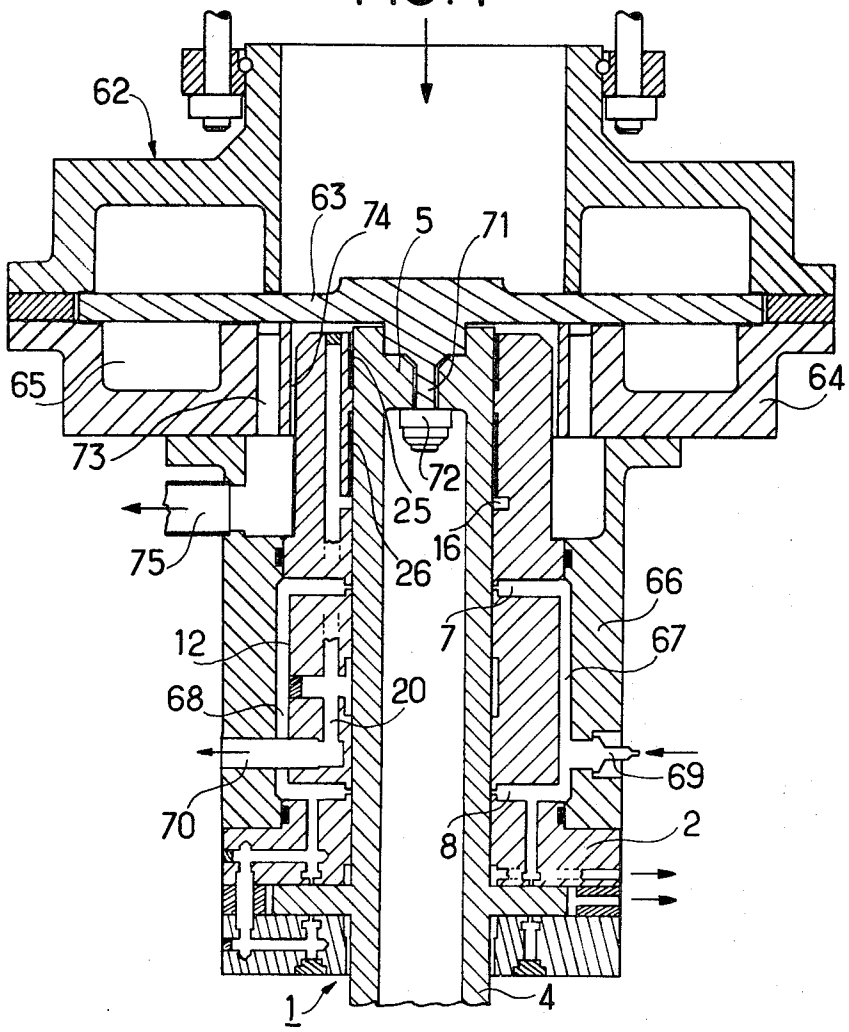
62
63
74
5
71
65
64
73
72
25
75
16
26
66
12
7
67
68
20
69
70
8
2
1
4

FIG. 5

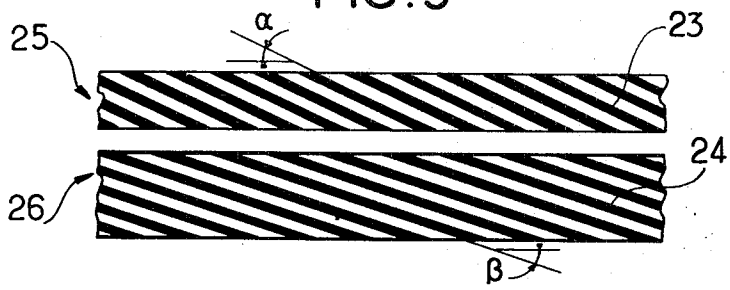
α
25
23
24
26
β

PIVOT FOR ROTATING MOLECULAR PUMPS

The present invention concerns a pivot for rotating molecular pumps.

It is known that several types of rotating molecular pumps exist: cylindrical rotor pumps such as described by Holweck (French Pat. No. 1,293,546), pumps with a rotor in the form of a disk such as described by Gondet and Siegbahn (U.S. Pat. No. 1,942,139), and turbomolecular pumps such as described by Becker (French Pat. No. 1,165,792) and Hablanian (French Pat. No. 1,297,182).

It is also known that these pumps comprise a rotor rotating in a vacuum, this setting serious sealing and lubricating problems along the rotor shaft, the ingress of oil or of grease giving rise to the producing of vapor which prevents thorough vacuums from being obtained.

Moreover, to provide a solution to these problems, the applicant has designed a molecular pump of the Holweck type using no oil lubrication, but comprising fluid gas bearings and molecular seals intended for ensuring fluid-tight sealing along the rotating shaft. This pump has the advantages of rotating without wear with a low drive power, for the power lost in a fluid gas bearing is infinitely slight, of being completely free from oil vapor and also of being capable of bearing radiations and of being installed by heating because it is entirely metallic and has no lubricating or cooling liquid. Moreover, this pump has the advantage of being driven by a drive means installed in the outside atmosphere.

It is further known that the discharge and compression conditions imposed by the user determine his choice in favour of one type of rotating molecular pump or another, this leading manufacturers to produce small series of pumps of all kinds and this affects the manufacturing price of these pumps.

The applicant has therefore sought to perfect a model of pivot capable of being adapted to rotating molecular pumps of all types, by providing the pivot according to the invention with the required elements for the pump installed on such a pivot to have advantages which can compare with those mentioned above, obtained with the pump of the Holweck type in French Pat. No. 1,293,546 in the name of the applicant.

Moreover, according to a major characteristic of the invention, the pumps are installed in an overhanging position on the pivot according to the invention, this making them more compact and easier to house on pump frames, and making the dismantling thereof easier.

Consequently, the pivot according to the invention on which any type of rotating molecular pump may be installed in an overhanging position, this pivot comprising a stator element fixed to the stator of the pump by means of a connecting part as well as a rotor element having a cylindrical shape, mechanically coupled to the rotor of the pump, is characterized in that the rotor element rotates with slight play inside an internal space formed in the stator element, and in that this space comprises successively, from the upper part of the pivot to the lower part of the pivot, a dynamic molecular seal, a dynamic viscous seal, several gas bearings, a gas thrust bearing and a gas counter-thrust bearing.

The pumps using such a pivot may easily be dismantled by the user.

These pumps have excellent axial and radial stability.

The following description, with reference to the accompanying figures will make it easier to understand how the invention may be implemented.

FIG. 1 shows the pivot according to the invention;

FIG. 2 shows the pivot according to the invention on which is assembled a molecular pump of the Holweck type in an overhanging position;

FIG. 3 shows the pivot according to the invention on which is assembled a turbomolecular pump in an overhanging position.

FIG. 4 shows the pivot according to the invention on which is assembled a disk type molecular pump in an overhanging position.

FIG. 5 shows the molecular seal and the viscous seal used in the pivot according to the invention.

FIG. 1 shows the pivot **1** according to the invention. That pivot comprises a stator element **2** (called, hereinafter, in the description, stator **2**) inside which is arranged a cylindrical chamber **3** in which is a rotor element **4** (called, hereinafter, in the description, rotor **4**) constituted by a hollow cylinder.

The upper part of the rotor **4** has a cylindrical ring **5** whose central part is tapped and whose lower part has a ring **6**, having a toroidal shape with a rectangular cross-section. The stator **2** of the pivot **1** comprises two series of ducts **7, 8**, whose axes are situated in two horizontal planes and which bring a gas under pressure into the cylindrical chamber **3** at points **9, 10**. These points are regularly spaced on the inside surface **11** of the stator **2** in two equal parallel circumferences.

The ducts **7, 8** are connected to a device supplying gas under pressure (not shown) and lead into the bottom **12** of a cutaway part provided in the outside surface of the pivot **1** between these two series of ducts.

Vertical ducts **13** connected to the ducts **8** direct the gas under pressure on the upper surface of the ring **6**.

Vertical ducts **14** having the same axis as the ducts **13** and connected to these latter by U-shaped ducts direct the gas under pressure on the lower surface of the ring **6**.

A cavity **15** in which the ring **6** rotates, as well as four circular grooves **16, 17, 18, 19** are provided in the stator **2**. The first groove **16** is arranged above the injection points **9**, the second **17**, between the injection points **9** and **10**, the third **18** below the injection point **10**, just above the cavity **15** and the fourth **19** just below the cavity **15**.

The grooves **16** and **17** communicate with an exhaust tube **20**, for gases to be let out into the open atmosphere, to which is fitted a pipe (not shown).

An exhaust tube **21** is provided for the groove **18**.

The space between the stator **2** and the lateral surface of the ring **6** which has remained free is connected to the outside atmosphere by a tube **22**.

Two series of helical grooves **23, 24** are provided in the inside surface **11** of the stator **2** above the groove **16**, and are separated from each other by a portion of surface without grooves.

The form and the arrangement of the grooves are described in greater detail with reference to FIG. **5**. The smooth surface of the rotor **4** cooperates with the grooves **23** to constitute a molecular seal **25** and with the grooves **24** to constitute a viscous seal **26** U.S. Pat.

Nos. 3,131,940; 3,131,942; and 3,071,384, disclose seals of a general type similar to the molecular seal and viscous seal of the present invention.

The gas under pressure injected at the points **9** is expanded and evacuated in the grooves **16** and **17**; likewise, the gas under pressure injected at the points **10** is expanded and is evacuated in the grooves **17** and **18** thus enabling the operation of a first gas bearing **27** placed between the grooves **16** and **17**, and of a second gas bearing **28** placed between the grooves **17** and **18**.

The bearing **27** and **28** ensure the radial stability of the rotor **4**.

The more the rotating speed of the rotor **4** increases, the more the rotor has a tendency to expand under the effect of the centrifugal force, and the more the play between the rotor **4** and the stator **2** decreases, this tending to increase the efficiency of the bearings as well as the efficiency of the molecular seal, and of the viscous seal.

Air under pressure injected through the ducts **13** and **14** is removed after expanding into the outside atmosphere through the ducts **21** and **22**, as well as through the space **29** comprised between the stator **2** and the rotor **4**, placed below the groove **19**, thus enabling the operation of a thrust bearing **30**, respectively of a gas counter thrust bearing **31**, constituted by the upper surface, respectively the lower surface, of the ring **6** cooperating with the walls of the cavity **15**. The thrust bearing **30** and the gas counter-thrust bearing **31** provide axial stability for the rotor **4**.

The drive of the rotor **4** is ensured by a drive device not shown (motor, air turbine, pulleys, gear trains, etc.) exterior to the pivot and placed in the outside atmosphere.

FIG. **2** shows the pivot **1** according to the invention, on which is installed a Holweck pump **32** with a vertical axis, in an overhanging position. The pivot **1** being in all points identical to that described in FIG. **1**, it will not be described again here. The elements of that pivot are referenced with the same numerals as in FIG. **1**. That pump **32** comprises, in a conventional way, a rotor **33** formed by a smooth cylinder closed at its upper part, and a stator **34** having a cylindrical shape.

One or several helical grooves **36** connecting a lower chamber **37** in which there is a primary vacuum to an upper chamber **38** in which there is a secondary vacuum or a thorough vacuum are arranged in a known way in the inside walls **35** of the stator **34**.

Inasmuch as concerns the shape and the depth of the grooves, it will be a great advantage to refer to the aforementioned French patent.

A duct **39** leading into the lower chamber **37** is connected to a primary pump (not shown).

The stator **34** of the pump **32** is connected to the stator element **2** of the pivot **1** through a hollow and cylindrical connected part **40**.

That connecting part **40** comprises a cutaway part **41** formed in its inside wall and arranged facing the bottom cutaway part **12** formed in the outside surface of the pivot **1**, thus defining, with the stator element **2**, a toroidal chamber **42**.

The toroidal chamber **42** communicates, on the one hand, with an air inlet tube **43** for air under pressure formed in the connecting part **40**, and, on the other hand, with the ducts **7** and **8** of the pivot **1**.

The toroidal chamber **42** therefore acts as a gas supply chamber for gas under pressure and as a stabilizer chamber for the bearings **27** and **28** of the pivot **1**.

The connecting part **40** is also provided with a passage **44** for the pipe (not shown) connected to the gas exhaust tube **20** leading to the outside atmosphere.

The rotor **33** of the pump **32** is provided at its center with a screw **45** which engages in the central part of the ring **5** of the rotor element **4** and mechanically coupling the rotor **33** to the rotor element **4**.

The nut **46** of the screw **45** is tightened hard against the ring **5**.

It should be observed that the dismantling of the pump is very easy; it is sufficient, indeed, to unscrew the nut **46** as well as the nuts (not shown) fixing the stator **34** to the connection part **40**.

It should be observed, moreover, that the upper part of the pump rotor in contact with the secondary vacuum has a smooth surface with a simple shape, this making degassing easier and enabling a very thorough vacuum to be obtained.

The molecular seal **25** and the viscous seal **26** ensure fluid-tight sealing between the space **47** under primary vacuum comprised between the rotor **33** and the stator element **2** and the groove **16** of the pivot **1**.

FIG. **3** shows the pivot according to the invention, installed in a turbomolecular pump.

The pivot **1** is identical to that shown in FIG. **1** and it will not be described again here. The elements of that pivot are referenced by the same numerals in that figure as in FIG. **1**.

The turbomolecular pump **48** comprises a rotor **49** provided with rotating disks **50** between fixed disks **51** fast with a stator **52**.

The stator **52** of the pump **48** is connected to the stator element **2** of the pivot **1** through a mushroom-shaped connecting part **53** whose central part has been removed to allow the pivot **1** to pass.

The connecting part **53** comprises a cutaway part **54** formed in its inside wall and arranged facing the cutaway part **12** in the bottom, formed in the outside surface of the pivot **1**, thus defining, with the stator element **2**, a toroidal chamber **55**.

The toroidal chamber **55** communicates, on the one hand, with air inlet tube **56** for air under pressure formed in the connecting part **53**, and, on the other hand with the ducts **7** and **8** of the pivot **1**.

The toroidal chamber **55** therefore acts as a gas supply chamber for gas under pressure and as a stabilizer chamber for the bearings **27** and **28** of the pivot **1**, as does the toroidal chamber **42** in the preceding example.

The connecting part **53** is also provided with a passage **57** for the pipe (not shown) connected to the gas exhaust tube **20** leading to the outside atmosphere.

The rotor **49** of the pump **48** is provided at its center with a screw **58** engaging in the central part of the ring **5** of the rotor element **4** and mechanically coupling the rotor **49** to the rotor element **4**.

The nut **59** of the screw **58** is tightened against the ring **5**.

It must be observed that, as in the preceding example, the dismantling of the pump is very easy; indeed, all that is needed is to undo the nut **59** as well as the nuts (not shown) fixing the stator **52** to the connecting part **53**.

It must be observed, moreover, that, as in the preceding example, the upper part of the rotor of the pump in contact with the secondary vacuum has a smooth surface and a simple shape this making degassing easier and making it possible to obtain a very thorough vacuum.

A chamber **60** containing a primary vacuum, connected to a primary pump (not shown) by a tube **61** is placed at the bottom of the pump **48.**

The molecular seal **25** and the viscous seal **26** of the pivot **1** ensure fluid-tight sealing between the space containing a primary vacuum **60** and the groove **16** of the pivot **1.**

FIG. **4** shows the pivot according to the invention installed in a pump of the disk type.

The pivot **1** is identical to the pivot shown in FIG. **1** and it will not be described again here.

The elements of the pivot are referenced by the same numerals in that figure as in FIG. **1.**

The pump **62** comprises a rotor **63** in the form of a disk rotating in a stator **64** in whose walls are arranged several helical grooves **65.**

The stator **64** of the pump **62** is connected to the stator element **2** of the pivot **1** through hollow cylindrical connecting part **66.**

That connecting part **66** comprises a cutaway part **67** formed in its inside wall and arranged facing the cutaway part in the bottom **12,** formed in the outside surface of the pivot **1,** thus defining, with the stator element **2,** a toroidal chamber **68.**

The toroidal chamber **68** communicates, on the one hand, with an air inlet tube **69** for air under pressure formed in the connecting part **66** and, on the other hand, with the ducts **7** and **8** of the pivot **1.**

The toroidal chamber **68** therefore acts as a supply chamber for gas under pressure and as a stabilizer chamber for the bearings **27** and **28** of the pivot **1,** as do the toroidal chambers **42** and **55** in the preceding examples.

The connecting part **66** is also provided with a passage **70** for the pipe (not shown) connected to the gas exhaust tube **20** leading to the outside atmosphere.

The rotor **63** of the pump **62** is provided at its center with a screw **71** which engages in the central part of the ring **5** of the rotor element **4** and mechanically coupling the rotor **33** to the rotor element **4.**

The nut **72** of the screw **71** is tightened hard against the ring **5.**

It should be noted that, as in the preceding examples, the dismantling of the pump is very easy; it is sufficient, indeed, to unscrew the nut **72** as well as the nuts (not shown) fixing the stator **64** to the connecting part **66.**

It should be observed moreover, that, as in the preceding examples, the upper part of the pump rotor in contact with the secondary vacuum has a smooth surface with a simple shape, this making degassing easier and enabling a very thorough vacuum to be obtained.

The stator **64** comprises vertical tubes **73** making the grooves **65** communicate with a space **74** containing a primary vacuum. That space is connected by a tube **75** to a primary pump (not shown).

The molecular seal **25** and the viscous seal **26** provide fluid-tight sealing between the space **74** containing a primary vacuum and the groove **16** of the pivot **1.**

FIG. **5** shows the molecular seal and the viscous seal used in the pivot according to the invention.

The inside surface **11** of the stator **2** of the pivot **1** is shown developed.

The molecular seal **25** consists of n grooves **23** having a constant depth a, inclined at an angle of α in relation to the horizontal and extending between the upper end of the stator **2** and an intermediate space having no groove.

The viscous seal **26** consists of m grooves **24** having a constant depth b, inclined at an angle of β in relation to the horizontal, and extending between that intermediate space and the groove **16** of the stator **2.** According to an example of an embodiment, $\alpha = 15°$, $\beta = 10°$, $m = n = 50$, $a = 300\mu$, $b = 100\mu$.

The applicant has also produced satisfactory molecular and viscous seals in which the depth of the grooves decreases in degrees starting from the upper part of these seals.

To improve the operation of these seals, the applicant has formed, in certain cases, in the inside surface **11** of the stator **2,** at the level of the intermediate space, a groove in which a partial vacuum (of about 20 Torr) is produced.

Although the device which has just been described appears to afford the greatest advantage for the implementing of the invention, it will be understood that various modifications may be made thereto without going beyond the scope of the invention, it being possible to replace certain of these elements by other elements capable of fulfilling the same or an equivalent technical function therein.

The use of vacuum pumps provided with the pivot according to the invention is a particular advantage in devices which are to be heated or which have to provide a vacuum entirely free from all traces of oil.

Needless to say, the use of the pivot is in no way limited to the production of molecular pumps cited by way of examples having no limiting character, but on the contrary is extended quite naturally to all devices rotating at high speed and operating in a vacuum, and more particularly to ultracentrifuging devices.

What is claimed is:

1. Pivot for use with various types of rotating molecular pumps of the type having a pump rotor and a pump stator; said pivot comprising:

a stator element,

stator connecting means for connecting said stator element to the pump stator,

a rotor element rotatably mounted in an internal space formed in said stator element with slight play between said rotor element and said stator element,

rotor connecting means for connecting said rotor element to said pump rotor,

dynamic sealing means for sealing the opening between said stator element and said rotor element from adjacent pump structure,

gas bearing means for radially supporting said rotor element in said stator element, and

gas thrust bearing means for axially supporting said rotor element in said stator element.

2. Pivot according to claim **1,** wherein said rotor connecting means and stator connecting means include means for installing a rotating molecular pump in an overhanging position at the upper part of said pivot.

3. Pivot according to claim 2, wherein said dynamic sealing means includes a dynamic molecular seal arranged in said internal space adjacent the top of said pivot and a dynamic viscous seal arranged in said internal space below said dynamic molecular seal.

4. Pivot according to claim 3, wherein said gas bearing means include a plurality of axially spaced gas bearings arranged in said internal space below said dynamic viscous seal.

5. Pivot according to claim 4, wherein said gas thrust bearing means includes a gas thrust bearing and a gas counter-thrust bearing.

6. Pivot according to claim 2, wherein said stator connecting means includes a stator connecting part positionable between said pump stator and said stator element, and wherein said stator element includes a cutaway part formed on its outside surface, said stator connecting part and said cutaway part forming a stabilizer chamber for the gas bearing means.

7. Pivot according to claim 4, wherein said stator connecting means includes a stator connecting part positionable between said pump stator and said stator element, and wherein said stator element includes a cutaway part formed on its outside surface, said stator connecting part and said cutaway part forming a stabilizer chamber for the gas bearing means.

8. Pivot according to claim 2, wherein said gas thrust bearing means includes a gas thrust bearing and a gas counter-thrust bearing constituted by a ring of the rotor element rotating in a cavity formed in the stator element and held in a middle position in the cavity under the combined action of pressurized gas jets on respective upper and lower faces of said ring.

9. Pivot according to claim 6, wherein said gas thrust bearing means includes a gas thrust bearing and a gas counter-thrust bearing constituted by a ring of the rotor element rotating in a cavity formed in the stator element and held in a middle position in the cavity under the combined action of pressurized gas jets on respective upper and lower faces of said ring.

10. Pivot according to claim 3, wherein said molecular seal includes several grooves formed in the stator element and inclined at a certain angle in relation to the horizontal.

11. Pivot according to claim 10, wherein the depth of the grooves of the molecular seal decreases by degrees starting from the upper part of said molecular seal.

12. Pivot according to claim 3, wherein said viscous seal includes several grooves formed in the stator element and inclined at a certain angle in relation to the horizontal.

13. Pivot according to claim 12, wherein the depth of the grooves of the viscous seal decreases by degrees starting from the upper part of said viscous seal.

14. Pivot according to claim 12, wherein said molecular seal includes several grooves formed in the stator element and inclined at a certain angle in relation to the horizontal.

15. Pivot according to claim 14, wherein the depth of the grooves of the molecular seal decreases by degrees starting from the upper part of said molecular seal.

16. Pivot according to claim 10, wherein an intermediate space not having grooves is provided between the molecular seal and the viscous seal.

17. Pivot according to claim 14, wherein an intermediate space not having grooves is provided between the molecular seal and the viscous seal.

18. Pivot according to claim 16, wherein means for producing a partial vacuum in said intermediate space is provided.

19. Pivot according to claim 17, wherein means for producing a partial vacuum in said intermediate space is provided.

20. Pivot according to claim 2, wherein said gas bearing means includes two axially spaced gas bearings arranged in said internal space below said dynamic sealing means.

21. Pivot according to claim 9, wherein said gas bearing means includes two axially spaced gas bearings arranged in said internal space below said dynamic sealing means.

22. Pivot according to claim 2, wherein said rotor element includes means for attaching to a rotor driving means at a position placed in the outside atmosphere.

23. Pivot according to claim 20, wherein gas exhaust grooves are formed in said stator element at positions axially spaced from gas inlets to said gas bearings.

24. Pivot according to claim 8, wherein gas exhaust openings communicate directly with the outer circumference of said ring for exhausting gases supplied to the thrust and counter-thrust bearings.

* * * * *