United States Patent [19]

Kruspe et al.

[11] **3,831,727**

[45] **Aug. 27, 1974**

[54] **PRESSURIZING SYSTEM FOR INK JET PRINTING APPARATUS**

[75] Inventors: **Harry R. Kruspe; N. Kenneth Perkins,** both of Lexington, Ky.

[73] Assignee: **International Business Machines Corporation,** Armonk, N.Y.

[22] Filed: **Nov. 21, 1972**

[21] Appl. No.: **308,365**

[52] **U.S. Cl.** ..... **197/1 R,** 346/75, 137/566, 137/570, 137/827, 346/140

[51] **Int. Cl.** **G01d 15/18,** G01d 18/00

[58] **Field of Search** ..... 346/75, 1; 101/DIG. 13; 197/1 R; 137/455, 566, 624.11, 827, 570; 178/6.6 R; 317/3

[56] **References Cited**

UNITED STATES PATENTS

2,667,402	1/1954	Traugott	346/75
3,185,991	5/1965	Gill, Jr. et al.	346/140
3,341,860	9/1967	Schweitzer	346/140
3,371,350	2/1968	Sanderson et al.	346/140
3,424,198	1/1969	Erbach	346/140 X
3,476,874	11/1969	Loughren	346/75 X
3,595,994	7/1971	Whitman	346/75
3,681,778	8/1972	Keur	346/75
3,708,798	1/1973	Hildewbrand et al.	346/75

FOREIGN PATENTS OR APPLICATIONS

501,560	4/1954	Canada	346/75
1,123,188	8/1968	Great Britain	346/75
1,003,853	2/1957	Germany	346/75

OTHER PUBLICATIONS

A. B. Dick Technical Description, Model 9600 Video Jet Printer, p. 2–7 Received April 12, 1971.

Primary Examiner—Robert E. Pulfrey
Assistant Examiner—E. H. Eickholt
Attorney, Agent, or Firm—D. Kendall Cooper

[57] **ABSTRACT**

A pressurizing system for an ink jet printer is described that is mounted on a movable carrier, the carrier having an associated nozzle, charge ring, and deflection plates for generating information on a character-by-character basis or on a line-by-line basis, the carrier further including an ink supply reservoir and the entire assembly constituting an efficient structure operable at high speeds.

6 Claims, 10 Drawing Figures

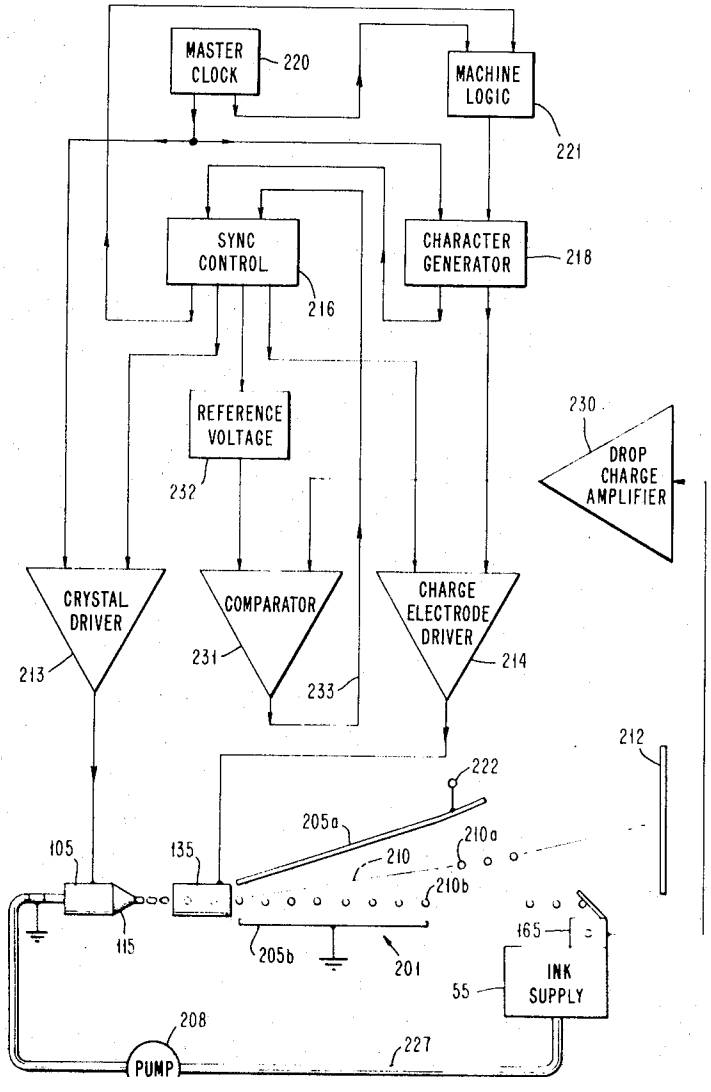

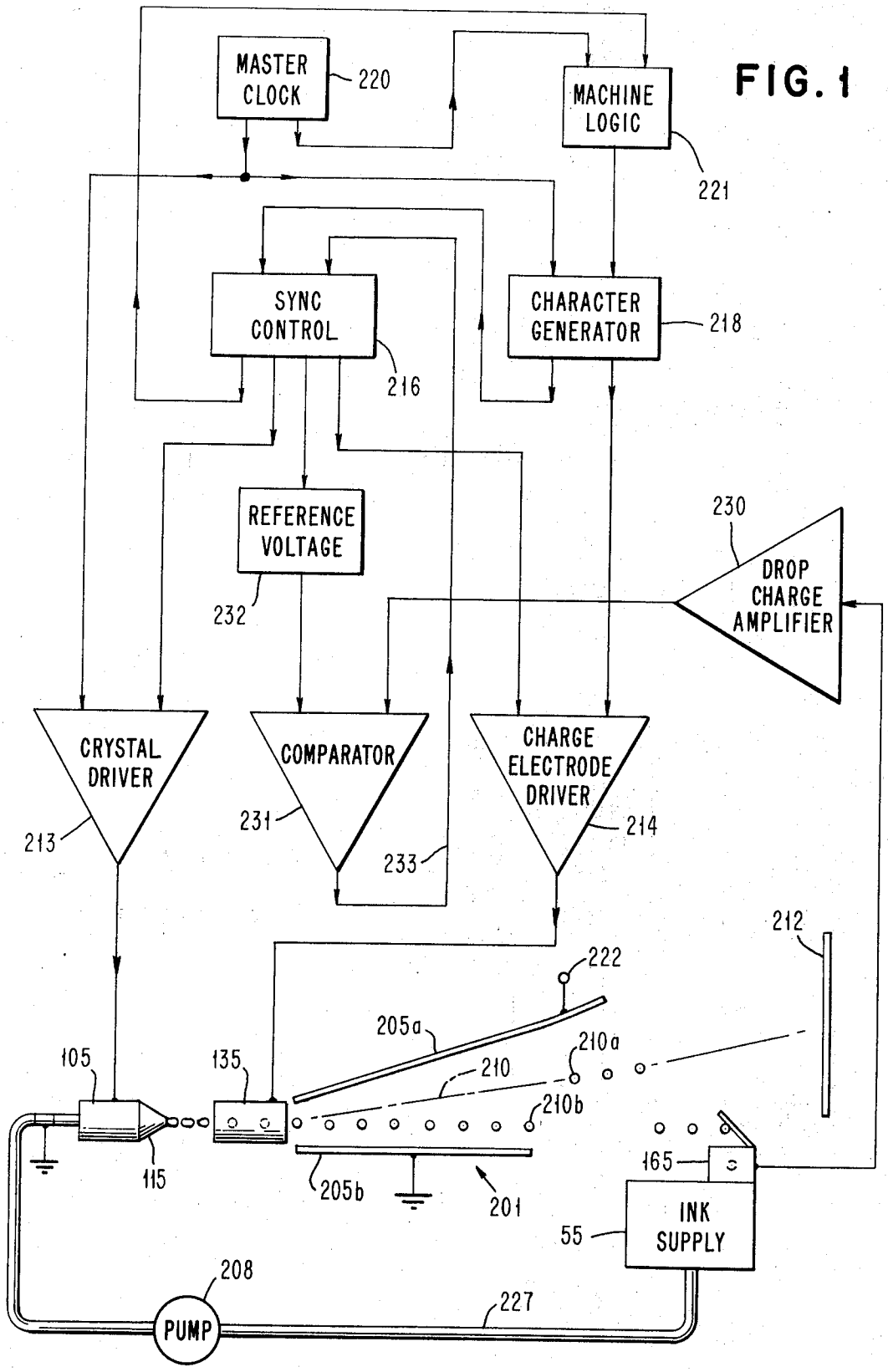
MASTER CLOCK
220
MACHINE LOGIC
221
SYNC CONTROL
216
CHARACTER GENERATOR
218
REFERENCE VOLTAGE
232
230
DROP CHARGE AMPLIFIER
CRYSTAL DRIVER
213
COMPARATOR
231
233
CHARGE ELECTRODE DRIVER
214
212
222
205a
210a
210
210b
105
135
115
205b
201
165
INK SUPPLY
55
208
PUMP
227

FIG. 1

FIG. 2

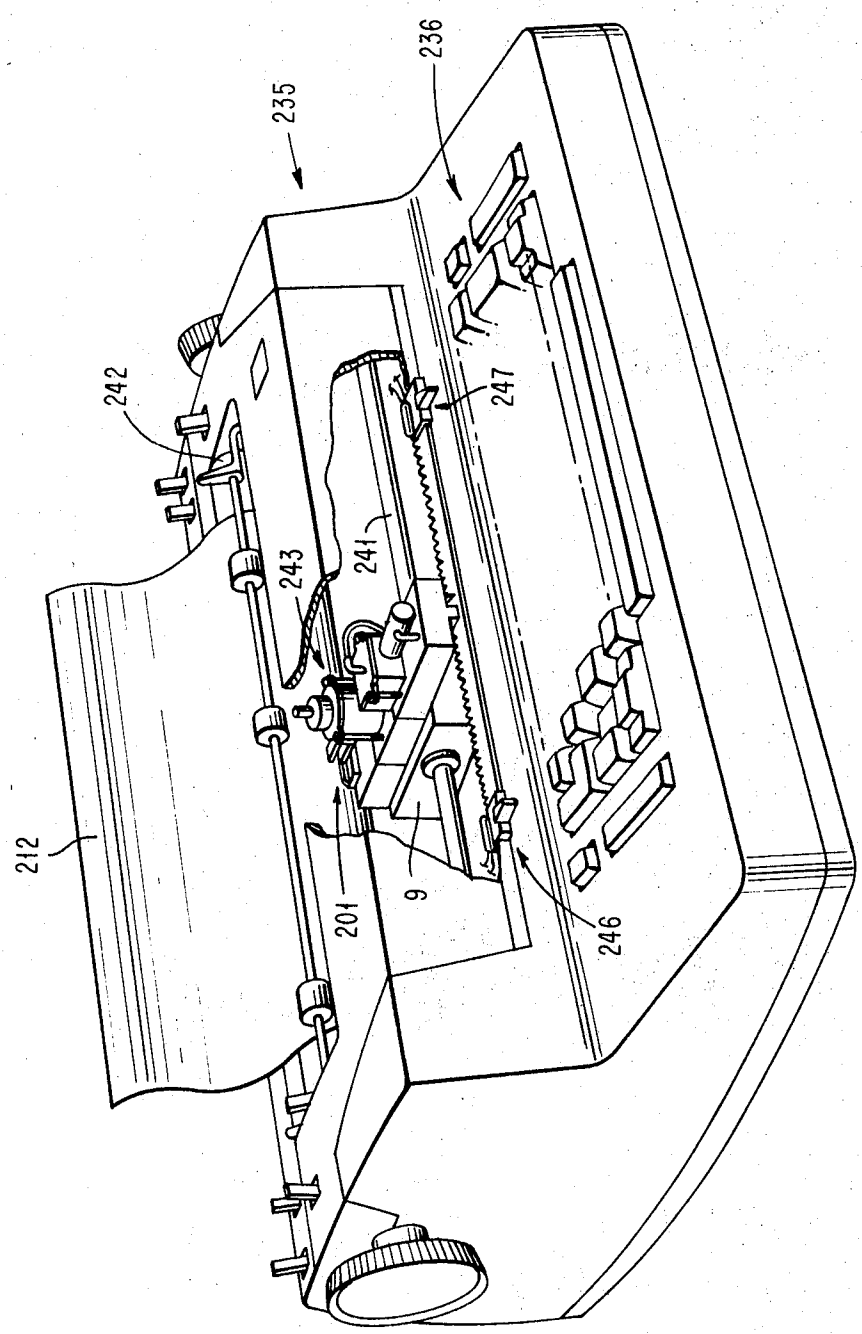

FIG. 3

FIG. 3a
FIG. 3b

FIG. 3a

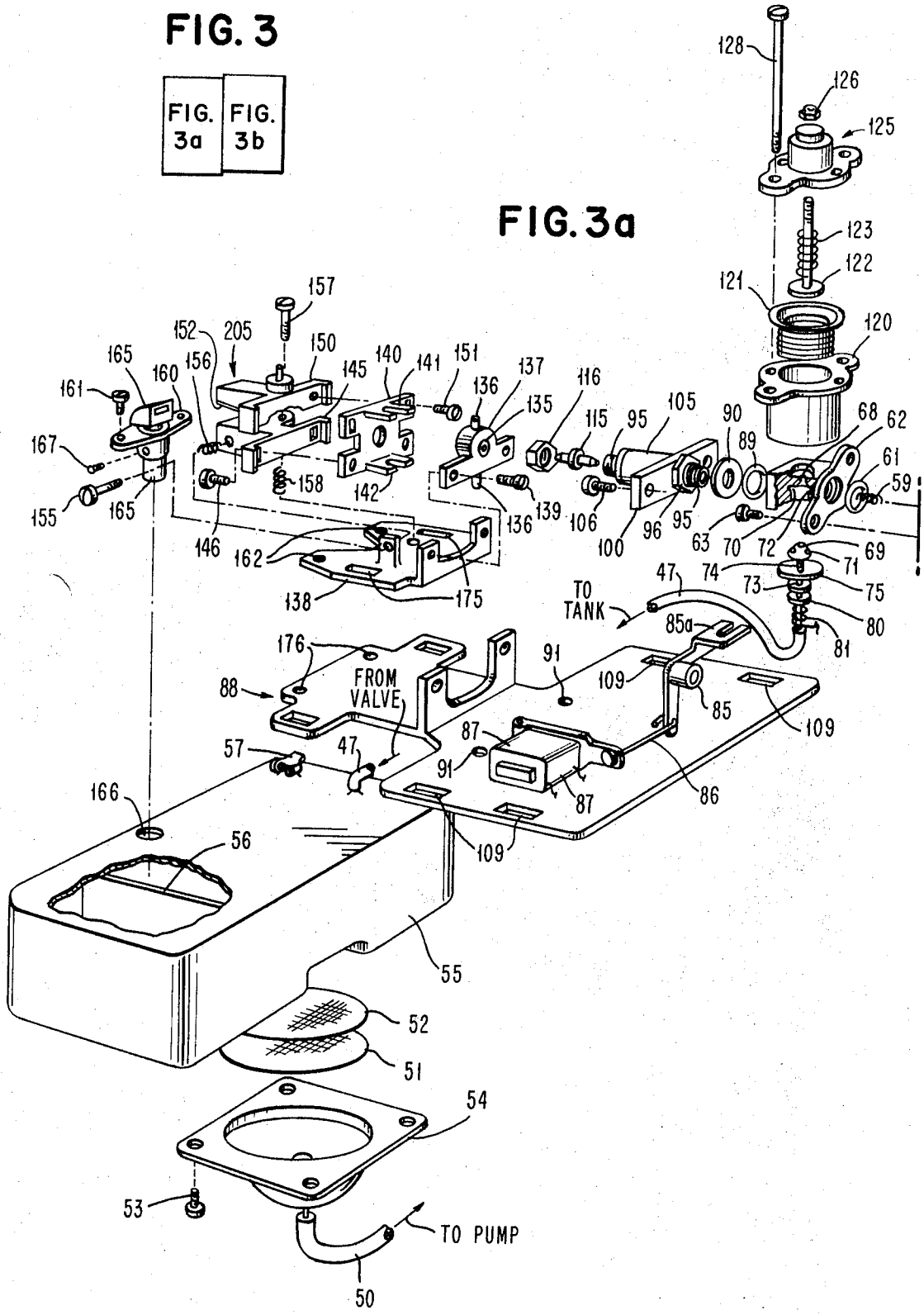
128
126
125
123
122
121
120
157
152
205
150
165
160
156
145
140
141
151
137
136
135
116
161
115
95
105
90
68
62
167
89
61
158
142
59
155
165
139
136
106
96
95
146
162
100
63
70
72
69
71
138
175
47
74
73
75
TO TANK
85a
80
81
176
91
109
88
FROM VALVE
85
109
87
57
47
91
86
87
166
56
109
55
52
51
54
53
TO PUMP
50

FIG. 3b

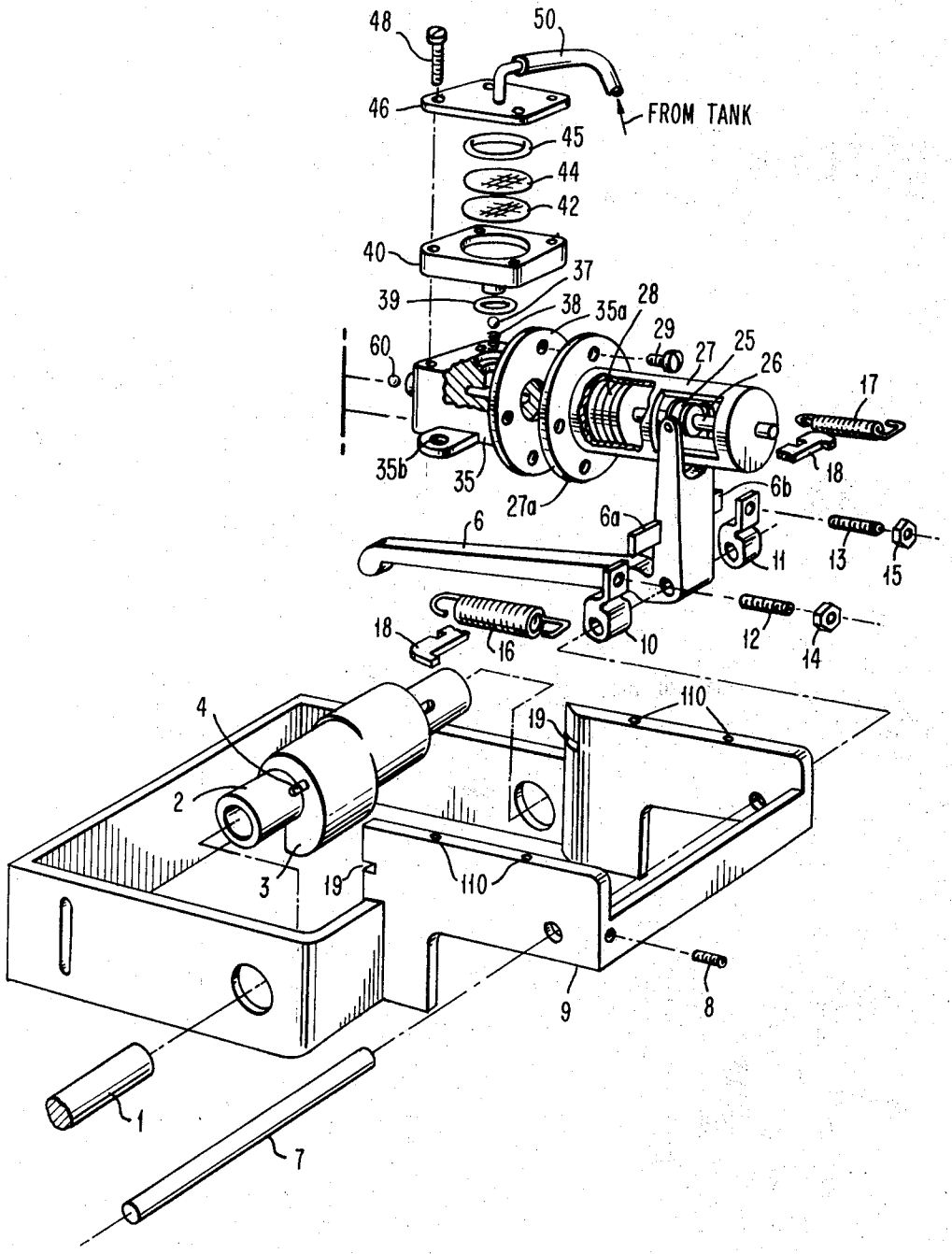
48
50
46
FROM TANK
45
44
42
40
37
39
38
35a
28
29
27
25
26
60
17
35b
35
27a
18
6b
6a
6
11
13
15
18
16
10
12
14
4
110
19
2
3
19
110
9
8
1
7

FIG. 4a

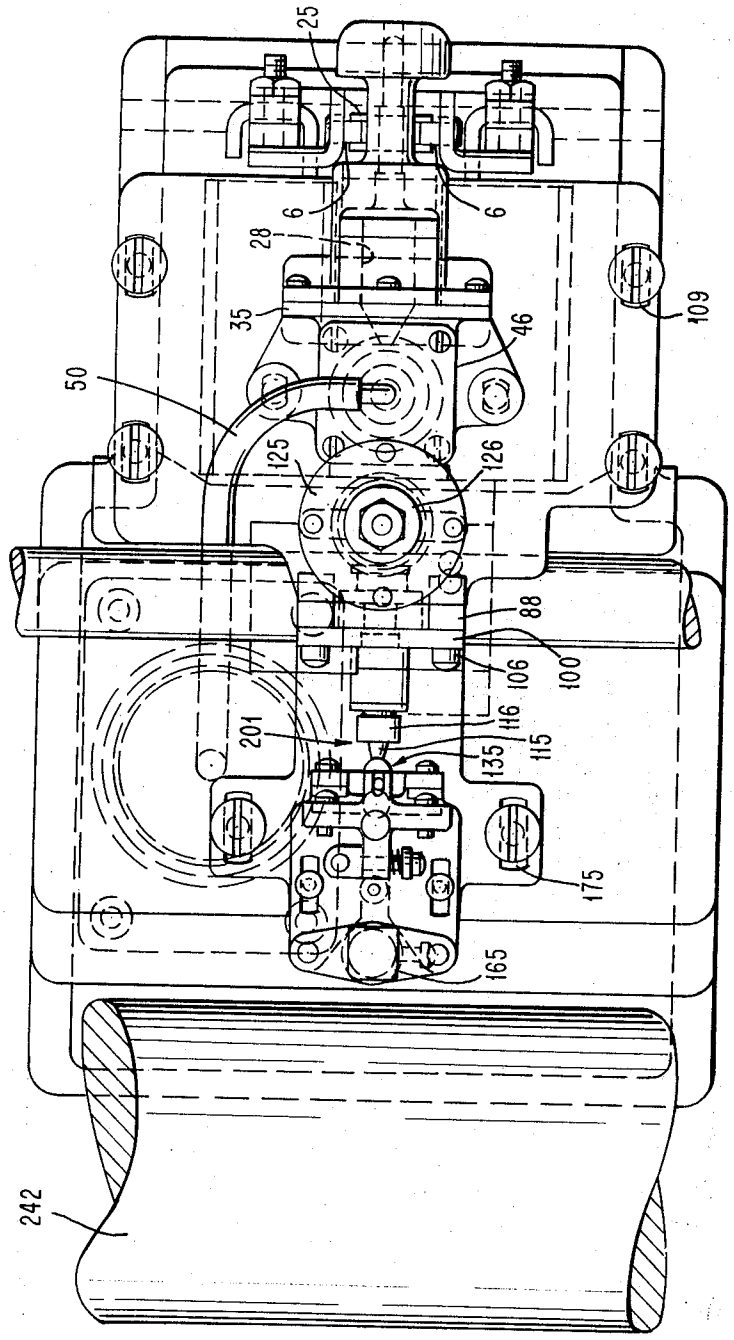
25
6
6
28
35
46
109
50
125
126
88
106
100
201
116
115
135
175
165
242

FIG. 4b

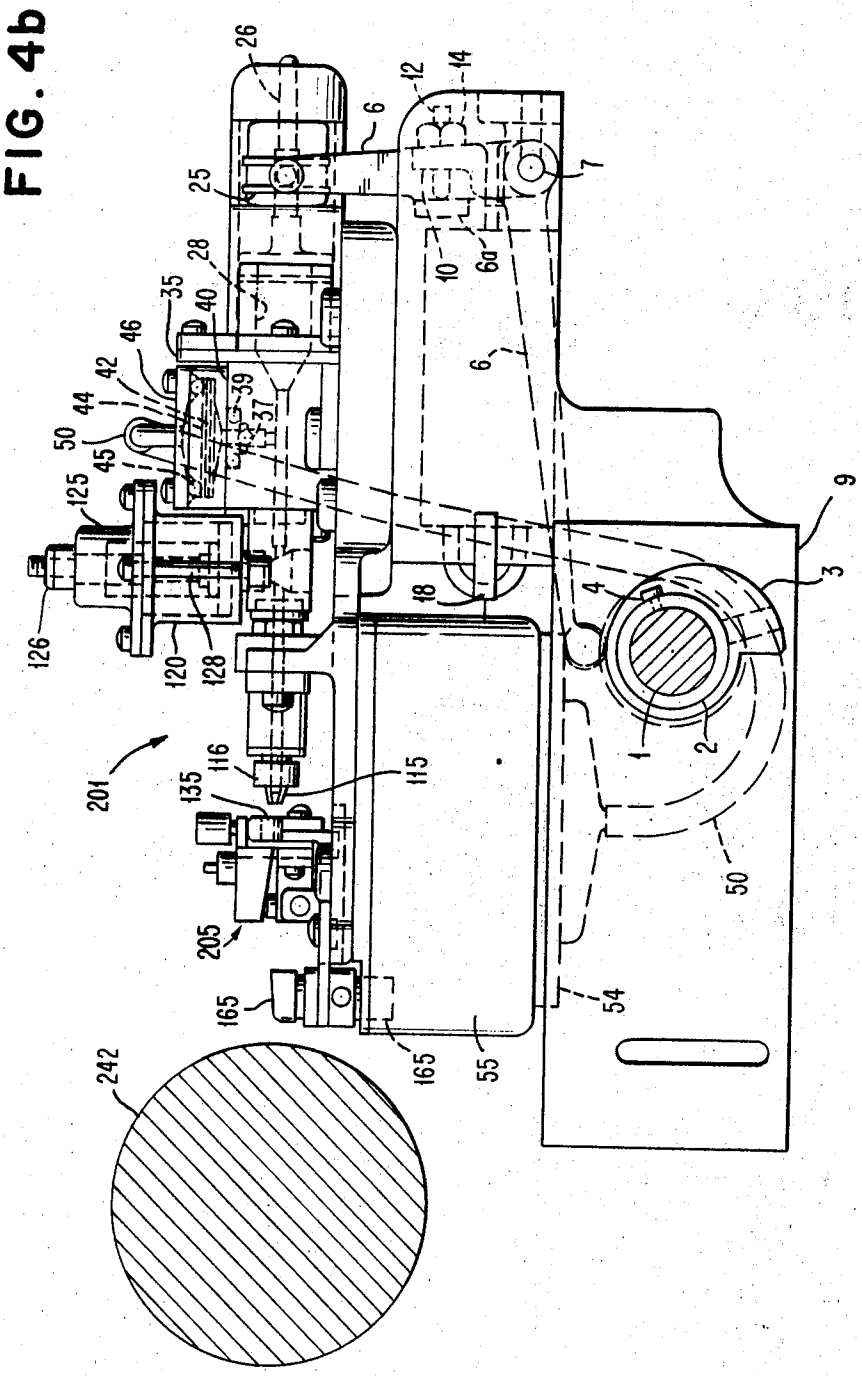
26
25
28
35
40
46
42
44
50
45
125
126
120
128
39
37
6
12
14
7
10
6a
6
18
4
9
3
1
2
50
54
55
165
165
205
135
116
115
201
242

FIG. 5a

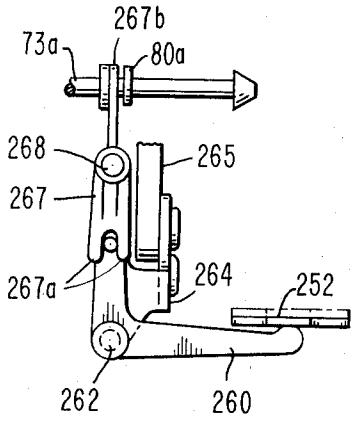

FIG. 5b

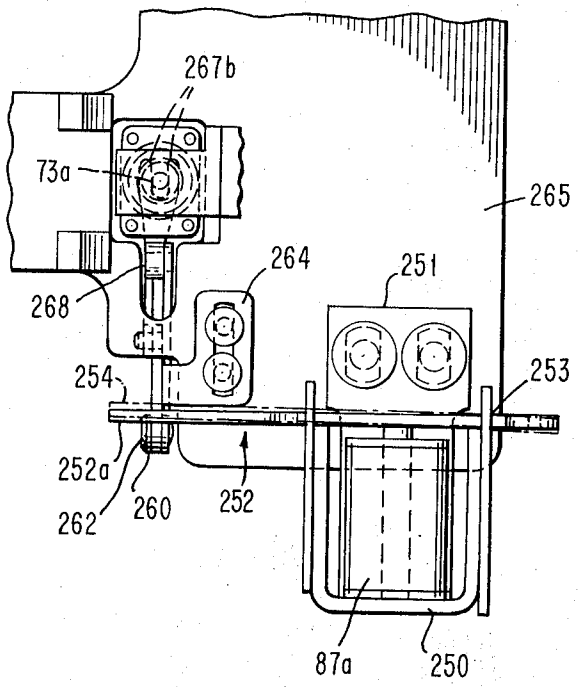

FIG. 5c

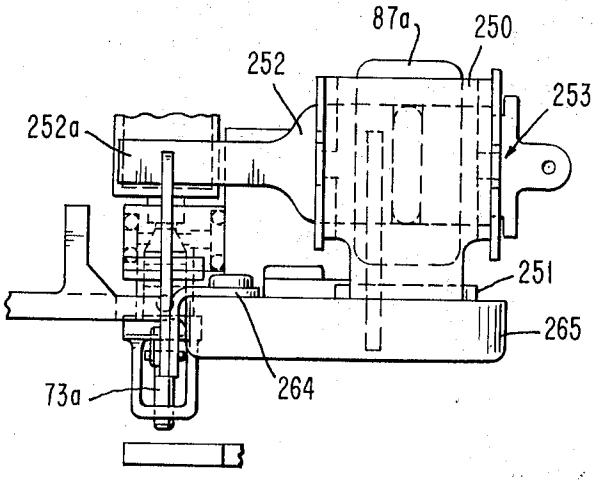

PRESSURIZING SYSTEM FOR INK JET PRINTING APPARATUS

REFERENCES OF INTEREST

The following IBM Customer Engineering Manuals are of interest:

"Selectric Printer Instruction Manual", January, 1966, Form No. 241-5032-2.

"Selectric" Typewriter, November, 1970, Form No. 241-5615-0.

"Selectric" Typewriter Service Manual Supplement, Form No. 241-5615-0 (Supplement).

BACKGROUND OF THE INVENTION AND PRIOR ART

Ink jet printing apparatus prior to this time has ordinarily incorporated nozzle assemblies and pumping and ink supply members as completely separate and independent structures. This has required the use of lengthy conduits or hoses, additional hardware, and more careful control of parameters such as pressure, temperature, and the like.

SUMMARY OF THE INVENTION

In accordance with the present case, an ink jet printing apparatus has a nozzle assembly mounted on a carrier for relative movement in relation to a document to be printed. Integrally formed with the carrier are a pump and ink supply that are relatively movable along with the nozzle assembly. The arrangement results in a compact, efficient structure and provides for required adjustments such as those pertaining to the jet stream itself and the relationship of the pressurizing system to the charging coil and deflection plates as well as adjustment of stream angle relative to the paper. This insures improved print quality and reduces maintenance requirements. Other aspects of the system are the elimination of flexible hose connctions, facilitation of automatic cleaning of the nozzle orifice and ink pressure chamber without contamination or dilution of ink in the supply tubes, and ability to cut the ink jet stream off and on automatially at the end of each line or after any character in a line, if a delay in printing is expected. An ability to cap and uncap the ink jet nozzle may be provided. The elimination of ink at relatively high pressure in flexible tubes reduces greatly the possibility of ink being sprayed on the operator of the apparatus. It also establishes a more constant pressure since flexible hoses required to flex during carrier movement lead to pressure fluctuations. These in turn affect printing quality.

OBJECTS

A primary object of the present invention is to provide a pressurizing system for an ink jet printing apparatus in which all elements of the system are integrated with the ink jet nozzle for a more efficient and reliable operation.

The foregoing and other objects, features, and advantages of the invention will be apparent from the following more particular description of the preferred embodiment of the invention as illustrated in the accompanying drawings.

DRAWINGS

In the Drawings:

FIG. **1** is a block diagram of an ink jet printing apparatus incorporating pressurizing systems in accordance with the present invention.

FIG. **2** is a perspective view of an ink jet printer incorporating the pressurizing and printing systems on a movable carrier.

FIGS. **3***a* and **3***b* when combined as shown in FIG. **3** represent an exploded view of the pump and ink supply structures previously discussed in connection with FIGS. **1** and **2**.

FIGS. **4***a* and **4***b* respectively represent a top elevation and a side elevation of the nozzle, ink supply, and pressurizing systems in relation to a document platen in the printer of FIG. **2**.

FIGS. **5***a*, **5***b*, and **5***c* are elevational views of various kinds, illustrating electromagnetic actuating means and associated linkages for controlling the pumping structures of FIGS. **3***a*, **3***b*, **4***a*, and **4***b*.

DETAILED DESCRIPTION

Various elements concerned with the pressurizing system including the pump, ink supply, and nozzzle structures are designated by reference numerals **1–176** in the detailed drawings of FIGS. **3***a*, **3***b*, **4***a*, **4***b*, **5***a*–**5***c*. For this reason, reference numerals in FIGS. **1** and **2** are predominately in the "**200**" Series.

FIG. **1** is a block diagram of an ink jet printing apparatus incorporating a nozzzle assembly **201**, a crystal **105**, nozzle **115**, charge electrode **135**, deflection plates **205***a* and **205***b*, and having an associated ink supply **55** with pump **208**. Nozzle assembly **201** is positioned for formation, propulsion, charging, and deflection of drops in a stream **210** toward a document **212** to be printed. As is known in the art, drops are formed by vibration of crystal **105** under control of crystal driver **213** and are propelled from nozzle **201**. Drops are variably charged by charge electrode **135** under control of charge electrode driver **214** which in turn is controlled by the sync control box **216** in accordance with characters from character generator **218**. Other elements of the system include the master clock **220** that provides master pulses for determining machine operation, and a machine logic block **221** for controlling the various processes of the apparatus. Following charging of individual drops, they are deflected by means of a potential from terminal **222** applied across plates **205***a* and **205***b* in accordance with the strength of the charge placed on the drops by electrode **135**. Any drops not required for printing such as drops **210***b* are directed to a gutter **165**. Other drops, such as drops **210***a* required for printing are directed along various paths to document **212**. Drops landing in gutter **165** are returned to ink supply **55** and conduit **227** for recirculation through the system.

If desired, currents generated in gutter **165** as a result of the drops passing therethrough can be used to determine synchronization following amplification by amplifier **230** comparision by comparator circuit **231** with a reference voltage from source **232** and application of a correction signal on line **233** to sync control **216**.

A printer unit **235** shown in more detail in FIG. **2** includes the customary keyboard **236** and various other controls found in a printer such as the IBM "Selectric" printer described in the various customer engineering manuals referred to previously. Nozzle assembly **201** is mounted adjacent a platen **242** on which document **212** is positioned for printing. Nozzle assembly **201** is

fastened to a carrier **9** that is slidably movable on shaft **241** adjacent to document **212** for printing of information on a character-by-character or line-by-line basis. Also positioned on carrier **9** are the pump structures **243** that are shown in greater detail in the other figures such as FIGS. **3***a*, **3***b*, **4***a*, **4***b*, **5***a–c*. Printer unit **235** includes a left margin switch **246** and a right margin switch **247** that are activated when the carrier reaches those respective locations to indicate the beginning and end of lines on document **212**. Printer **235** may be activated from a data source, not shown, that may be any of various known types, such as a computer, a communication network, a magnetic card reader/recorder, a magnetic tape reader/recorder, etc.

DETAILS OF INK SUPPLY, PUMP, AND NOZZLE ASSEMBLIES

Reference is made to FIGS. **3***a*, **3***b*, **4***a*, **4***b*, and **5***a–5c*. Only so many of the reference numerals as are believed necessary to facilitate an understanding of the elevational views in FIGS. **4***a*, **4***b*, and **5***a–5c* are incorporated in those figures.

Carrier **9** is mounted in the "Selectric" printer frame similarly to a type head carrier. Print shaft **1**, in addition to supporting carrier **9**, provides the rotating motion to pump charging cam **3** via sleeve **2** which is free to traverse the distance between the side frames of the support casting with carrier **9** but which also rotates with print shaft **1** upon command to refill the pump with ink. Cam **3** and sleeve **2** are rotated by print shaft **1** via key **4**. A partial rotation of cam **3** fills the pump by rotating rocker arm **6** clockwise about shaft **7**. The clockwise rotation of arm **6** stretches springs **16** and **17** via arms **10** and **11** and set screws **12** and **13** and adjusting nuts **14** and **15**. Set screws **12** and **13** press on ears **6***a* and **6***b* of bellcrank **6** and also provide a means of adjusting the force that springs **16** and **17** can exert on the pump. Springs **16** and **17** are hooked to bar **18** which is mounted to carrier **9** in slots **19**. See FIG. **3***b*.

A bellows pump is described. Diaphragm and piston type pumps may be used instead. Rotating bellcrank **6** clockwise stretches bellows **28** that has its peripheral left hand flange clamped between flanges **27***a* and **35***a* of housings **27** and **35**. The stretching force is translated from bellcrank **6** to bellows **28** by adjustable nut **25** and plunger shaft **26** whose flange is attached to bellows **28** and whose shaft portion is guided in housing **27**. Housings **27** and **35** are attached via screws **29**, only one being shown. Typically, in subsequent discussion, only one screw of each set is shown.

When bellows **28** is elongated, valve **60** is closed by force of spring **59** and vacuum created by the pump action, and valve **37** opens compressing spring **38**.

Ink is drawn into pump chamber in housing **35**. The ink is drawn from reservoir **55** thru filter **52** support screen **51** (that are mounted to tank **55** via flange **54** and screws **53**) and thru hose **50** and filter **44** and support screen **42**. The above filter and screen and valve **37** with its spring **38** are attached to housing **35** and sealed via seal **39**, spacer **40**, flange **46** and screws **48**.

During the pump charge cycle described above a stream of ink under pressure continues to flow out of nozzle **115** to the gutter **165** and back to reservoir **55** thru hole **166**. The continuing stream is accomplished as follows: The reserve or capacitance bellows **121** and its spring **123** are compressed when the pump is pressurized by force exerted by springs **16** and **17** and valve **60** is open and valve **37** closed. This action is initiated by turning cam **3** a partial turn so that cam follower portion of bellcrank **6** drops off the high point of cam **3**. The pump is in this condition during a print cycle.

During the recharge, cycle valve **60** is closed, the energy stored in spring **123** and bellows **121** is sufficient to maintain a stream of ink thru the bolt **95**, nozzle **115**, charge ring **135** to the gutter **165**. Capacitance or reserve bellows **121** with its spring **123** and plunger **122** are mounted to housing **62** and supported by housings **120** and **125** and screws **128**. Nut **126** is used to adjust maximum downstroke of the bellows.

Bolt **95** is attached to strap **100** via tensioning nut **96**. Nut **96** is torqued the proper amount to provide correct compressive pressure on piezoelectric crystal **105** which is captured between shoulder of bolt **95** and strap **100**. The assembly just described is mounted to ears of bracket **88** by screws **106**. Washer **90** and "**0**" ring **89** seal the ink path from bracket **62** to bolt **95**. The right hand tennon of nozzle **115** fits into end of bolt **95**. It is sealed to bolt **95** by nut **116**. Housing **62** is attached to housing **35** and sealed to it by "**0**" ring **61**. Valve **60** seats in housing **35** and is forced into its seat by spring **59** which seats in housing **62** thus providing a valved ink path from pump reservoir in housings **27** and **35** out thru nozzle **115**.

The above described assembly is attached by screws through slots **35***b* in housing **35** to tapped holes **91** in bracket **88**. Bracket **88** is mounted by four screws that extend thru slots **109** into tapped holes **110** of carrier **9**. The function of valve **69** whose seat **68** is in housing **62** is to close off the ink flow from the pump and capacitance chambers thru the nozzle any time the machine is shut down or there is a power failure. The valve when closed also provides a by-pass so pressure level in bolt and nozzle is immediately reduced to atmospheric pressure "thereby preventing nozzle from dribbling." Valve **69** also provides a by-pass from pump chamber to capacitance chamber to provide for equalizing pressure in the two chambers when valve **69** is closed and a pump stroke is initiated.

The valve unit parts are mounted and are operated as follows: Solenoid **87** pulls link **86** which rotates bellcrank **85** clockwise, FIG. **3***a*. The forked portion **85***a* of bellcrank **85** presses on disc **80** which is attached to valve stem **73**. This action opens valve **69**, compresses spring **81** and causes the lower portion of valve **69** to seal against pliable valve seat **75** which is supported and mounted to housing **62**. This prevents ink under pressure from pump chamber and capacitance chamber from bleeding out through port **74** and hollow valve stem **73** and tubing **47** to ink reservoir **55** during a print cycle or when ink is going to gutter during non-print but non-shutdown time. When the machine is shut down either intentionally or due to a power failure, spring **81** pressing on disc **80** actuates valves stem **73** and valve **69** upwardly so valve **69** is seated at **68**.

Due to passage **70** and port **74** the ink pressure in nozzle **115** and bolt **95** can immediately bleed off to reservoir **55** and stabilize at atmospheric pressure. If pressure in the pump chamber is greater than pressure in the capacitance chamber it can equalize via by-pass **71**.

With current connected to piezoelectric crystal **105** it stretches bolt **95** and then contracts forcing bolt **95**

to stretch and contract with the crystal which shakes nozzle **115** transversely with respect to its axis. This breaks the stream of ink being ejected from nozzle **115** into drops so that they can be charged by charge ring **135** and deflected by deflection plates **205** away from gutter **165** to form characters on paper dependent on the amount of charge placed on each drop and the speed of carrier **9** as it moves to the right during a print cycle.

The design shown has adjustments for many parameters. An example is spacing between deflection plate and base plate. The charge, deflection and gutter system consists of parts and assemblies as follows:

Charge ring **135** is mounted in bracket **137** which carries tennons **136.** Bracket **137** is mounted on bracket **138** with the center hole of charge ring **135** circumferentially aligned with stream of ink drops ejected from nozzle **115.** The assembly is held together with screws **139.** Base plate **145,** which acts to direct zero charged droplets from charge ring to gutter, is mounted to bracket **140** via screws **146.** Adjustment is provided to permit changing the surface of base plate **145** relative to the ink stream. Deflection plate **152** is mounted on the lower angular or curved surface of bracket **150** which in turn is attached to bracket **140** via screws **151.** Adjustment is provided to permit changing the surface of deflection plates **205** relative to the ink stream.

The assembly consisting of brackets **140, 145** and **150** is snapped on to bracket **137** with forks **141** and **142** fitting about tennons **136** and the inside "U" portion of bracket **140** encapsulating the spherical portion of bracket **137.**

The whole assembly is mounted to bracket **138** and is adjustable relative to charge ring **135,** by manipulation of mounting screw-spring pairs **155–156, 157–158.** Bracket **138** is now adjustably mounted to bracket **88** with screws thru slots **175** in **138** and tapped holes **176** in bracket **88.** This adjustment permits setting charge ring **135** the proper distance from the end of nozzle **115.** Gutter **165** collects all drops of ink that are not deflected to print characters on the paper. This ink is fed thru tube **165** into reservoir **55** thru hole **166.** Gutter **165** is mounted in bracket **160.** The gutter height can be adjusted relative to the stream of ink drops by set screw **167.** The assembly is mounted by screws **161** to tapped holes **162** in bracket **138.**

Reservoir **55** is filled thru cap **57.** Baffles, such as baffle **56,** retard sloshing of ink as carrier **9** traverses machine along shaft **241.**

VARIANT OF VALVE AND SOLENOID FOR SHUTDOWN

A variation of the valve, solenoid, and associated structures operable during shutdown is illustrated in FIGS. *5a*, *5b*, and *5c*. Solenoid **87***a* is mounted in a bracket assembly **250** fixedly mounted at **251.** Solenoid **87***a* has an associated armature **252** with customary pivoting action at **253.** Extremity **252***a* of armature **252** is movable from a deactivated position represented by the dashed line **254** to the solid line condition shown in FIG. *5b*. Positioned for actuation by armature **252** is a bellcrank **260** pivotally mounted at **262.** Bracket **264** is secured onto frame member **265** and supports bellcrank **260** for rotating action about pivot point **262.** Also supported for pivoting action is a rotatable forked member **267** pivotally mounted at **268.** Member **267** comprises a first forked portion **267***a* shown in FIG. *5a* and a second forked portion **267***b* seen more clearly in FIG. *5b*. Forked portion **267***b* is positioned for actuation of a disc **80***a* associated with valve **69** by means of the valve stem **73***a*. Energization of solenoid **87***a*, rotation of armature **252** and rotation of the members **260** and **267** effect opening and closing of valve **69** in a manner analagous to that previously described.

While the invention has been particularly shown and described with reference to a preferred embodiment, it will be understood by those skilled in the art that various changes in form and detail may be made without departure from the spirit and scope of the invention.

What is claimed is:

1. A pressurizing system for an ink jet printer having facilities for printing information on a document, comprising:

a carrier assembly, said carrier assembly incorporating a nozzle assembly for forming, propelling and deflecting a stream of ink drops toward said document in order to form information on said document;

a platen assembly for retaining and positioning said document during formation of information thereon;

means for relatively moving said carrier assembly and said platen assembly during formation of information;

ink supply means integrally mounted on said carrier assembly for supplying ink to said nozzle assembly as required during formation of information;

pump means interconnected between said ink supply means and said nozzle assembly, said pump means being operable to provide ink from said ink supply means to said nozzle assembly in predetermined quantities and at a predetermined pressure level; and

a capacitance bellows assembly interconnected with said pump means and operable in between refill operations to maintain a desired pressure level for ink supplied to said nozzle assembly.

2. A pressurizing system for an ink jet printer having facilities for printing information on a document, comprising:

a carrier assembly, said carrier assembly incorporating a nozzle assembly for forming, propelling and deflecting a stream of ink drops toward said document in order to form information on said document;

a platen assembly for retaining and positioning said document during formation of information thereon;

means for relatively moving said carrier assembly and said platen assembly during formation of information;

ink supply means integrally mounted on said carrier assembly for supplying ink to said nozzle assembly as required during formation of information;

pump means interconnected between said ink supply means and said nozzle assembly, said pump means being operable to provide ink from said ink supply means to said nozzle assembly in predetermined quantities and at a predetermined pressure level;

means for sensing machine shutdown, power failure, or other condition requiring standby of said printer apparatus; and

valve means interconnected with said pump means and operable to close off ink supply from said

pump means to said nozzle assembly during said standby condition.

3. The apparatus of claim **2** wherein said valve means serves to equalize pressure in the system during refill operations.

4. The apparatus of claim **2,** further comprising:

solenoid means interconnected with said valve means and operable to actuate said valve means to provide ink from said pump means to said nozzle assembly, as required during printing operations.

5. The apparatus of claim **2** wherein said pump means includes a pump chamber, and further comprising:

a capacitance bellows incorporating a capacitance chamber; and

means positioning said valve means between said pump chamber and said capacitance chamber to equalize pressure between said chambers during a refill operation, said valve means further serving to prevent ink under pressure from bleeding from said system during any print cycle or during non-printing intervals, and said valve means further serving to prevent supply to said nozzle assembly during shutdown.

6. The apparatus of claim **5** wherein said valve means incorporates at least a passage for said ink supply and an associated port enabling stabilization of ink pressure at atmospheric pressure, and said valve means further incorporating a by-pass enabling equalization of pressure in said pump means when it is greater than pressure in said capacitance bellows.

* * * * *