United States Patent [19]

Orr

[11] **3,824,817**

[45] **July 23, 1974**

[54] **REMOVABLE CYLINDER LOCK**

[75] Inventor: **John L. Orr,** Rockford, Ill.

[73] Assignee: **Keystone Consolidated Industries, Inc.,** Peoria, Ill.

[22] Filed: **Mar. 8, 1973**

[21] Appl. No.: **339,187**

[52] **U.S. Cl.** **70/81,** 70/85, 70/86, 70/134, 70/156, 70/371, 70/DIG. 62, 292/147

[51] **Int. Cl.** **E05b 65/44,** E05b 9/06

[58] **Field of Search** ..... 70/134, 362, 363, 364 A, 70/364 R, 365, 366, 370, 371, 381, 386, 451, DIG. 62; 248/27; 292/147; 85/8.8; 74/526

[56] **References Cited**

UNITED STATES PATENTS

1,576,943	3/1926	Best	70/380
2,363,436	11/1944	Pancoe	403/252
3,047,323	7/1962	Welch	292/245
3,121,210	2/1964	Orozco	338/149
3,623,344	11/1969	Wartian	70/134

FOREIGN PATENTS OR APPLICATIONS

1,006,239	4/1952	France	70/370
879,217	6/1953	Germany	70/370

Primary Examiner—Albert G. Craig, Jr.
Attorney, Agent, or Firm—Molinare, Allegretti, Newitt & Witcoff

[57] **ABSTRACT**

A lock device includes a housing and a removable cylinder. The cylinder is retained in the housing by a retainer spring attached to the housing and engageable with channels defined in the cylinder. A tool may be inserted through slots in the housing to engage and displace the retainer spring for removal of the cylinder. The cylinder may thus be removed from the housing and altered, repaired or replaced.

9 Claims, 19 Drawing Figures

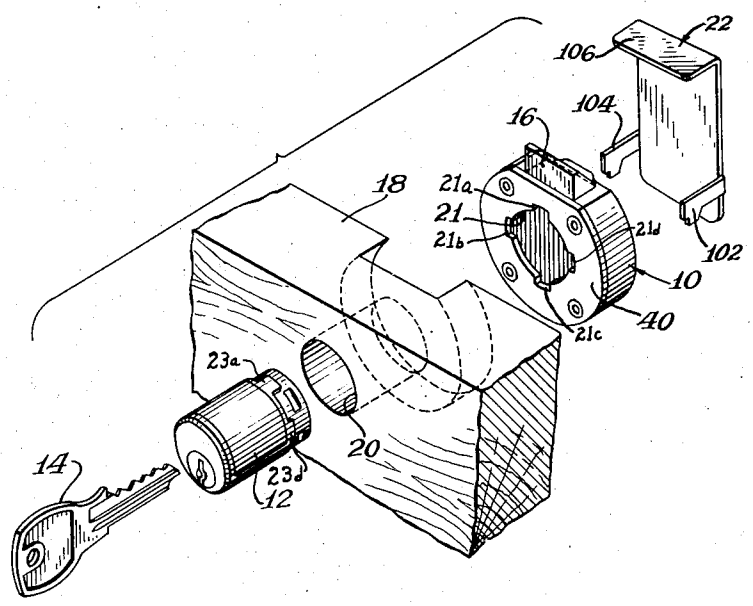

FIG. 1.

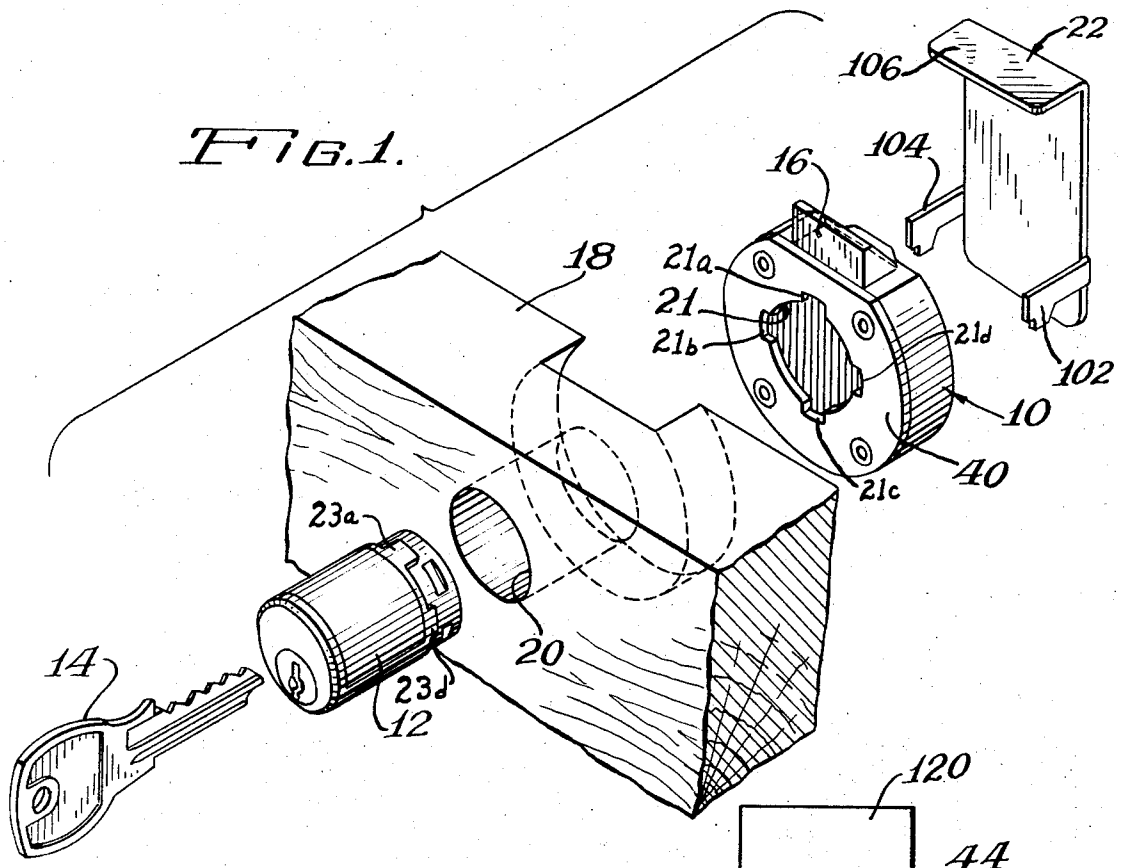

FIG. 19.

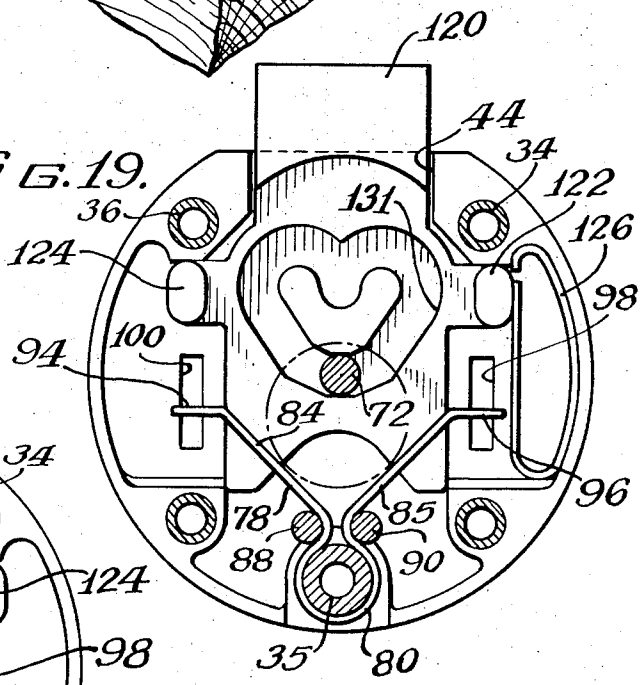

FIG. 18.

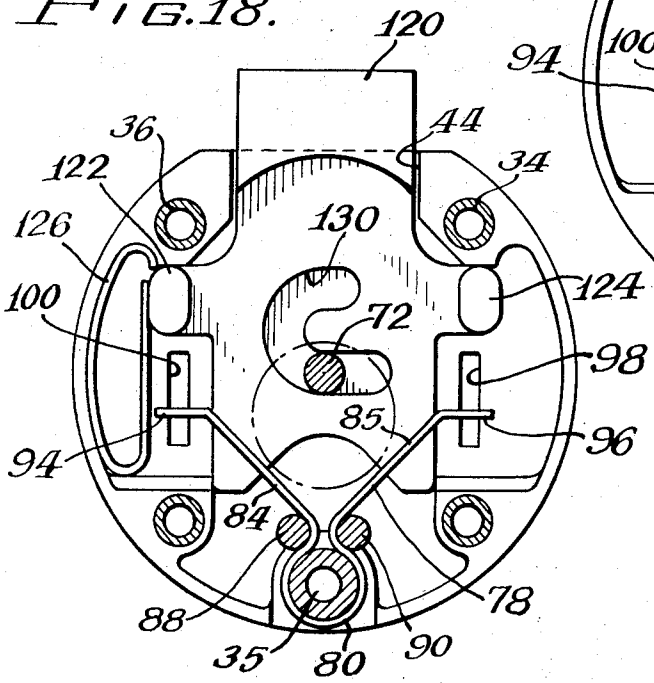

FIG. 2.

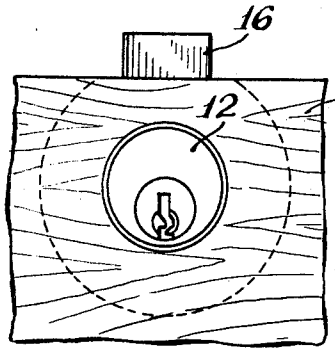

FIG. 3.

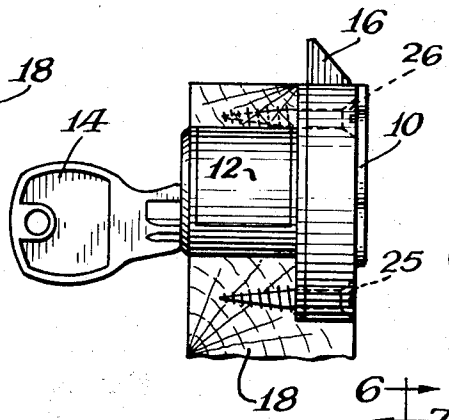

FIG. 4.

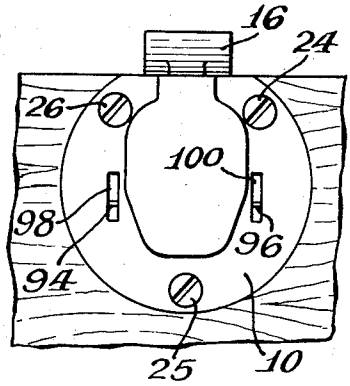

FIG. 5.

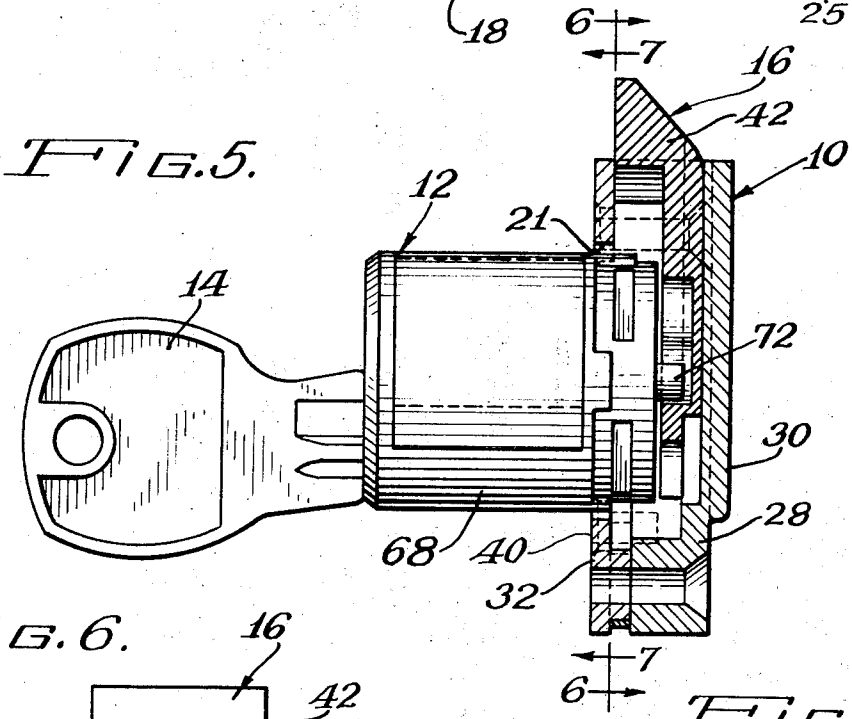

FIG. 6.

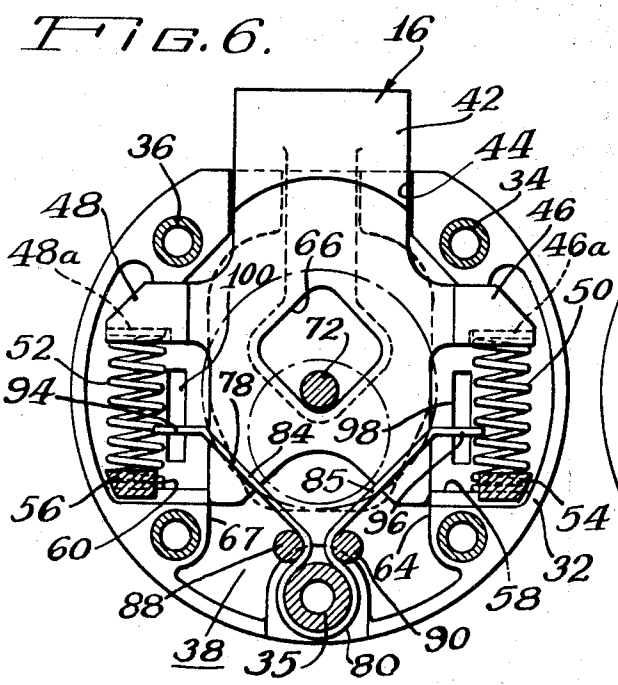

FIG. 7.

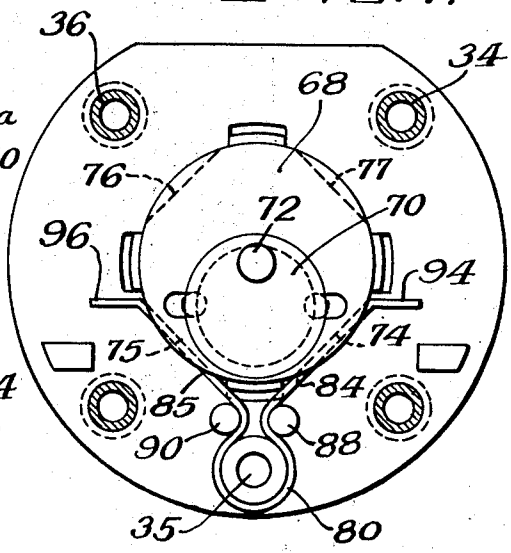

FIG. 8.

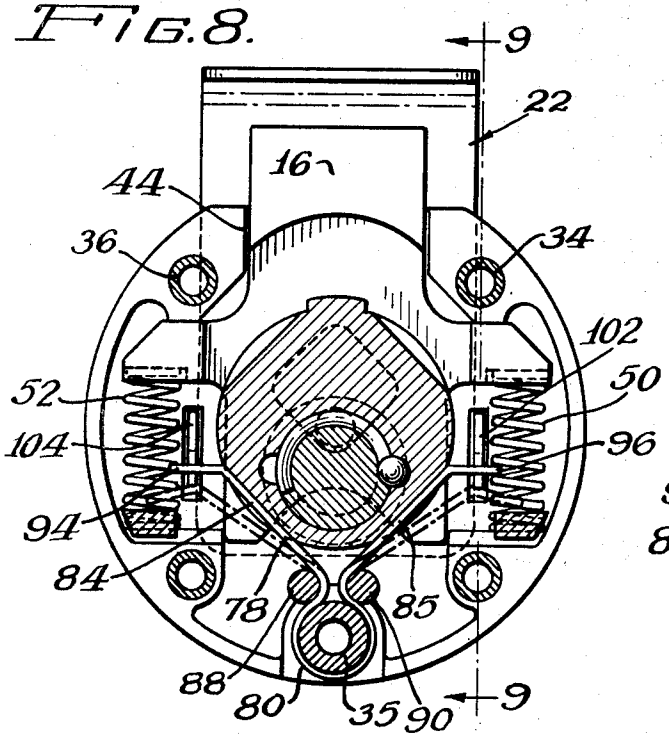

FIG. 9.

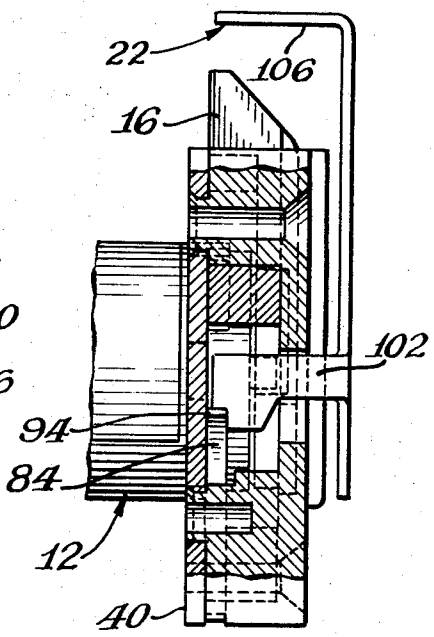

FIG. 10.

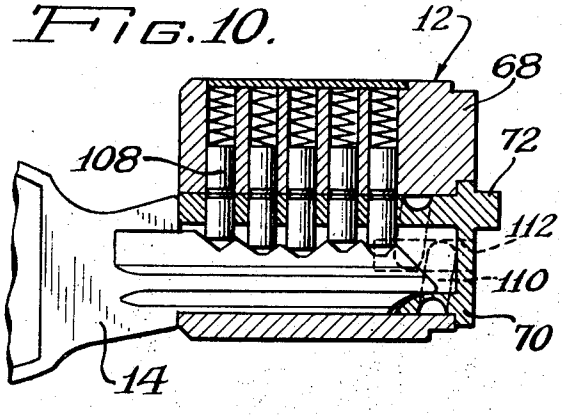

FIG. 11.

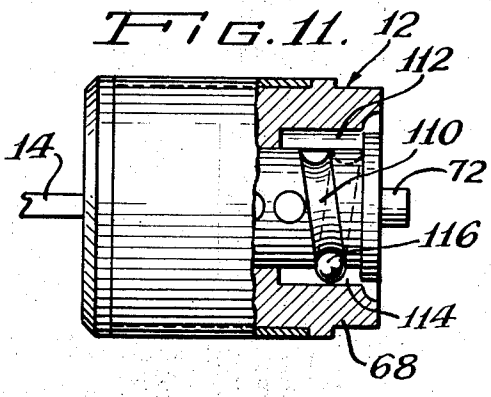

FIG. 13.

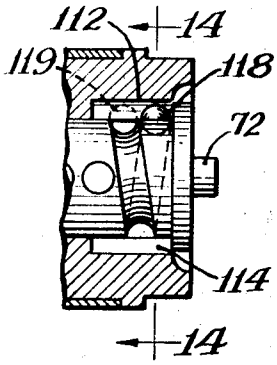

FIG. 15.

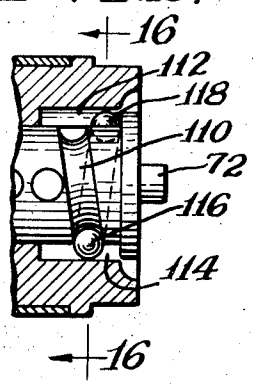

FIG. 12.

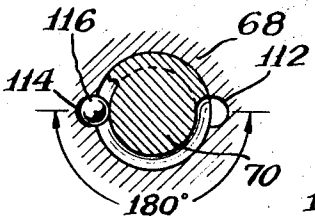

FIG. 14.

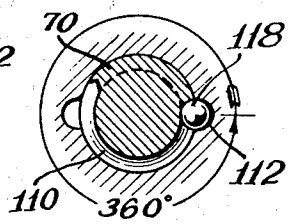

FIG. 17.

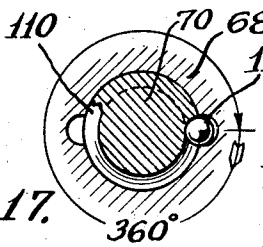

FIG. 16.

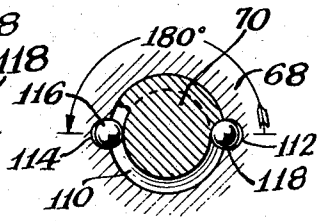

REMOVABLE CYLINDER LOCK

BACKGROUND OF THE INVENTION

In a principal aspect, the present invention relates to an improved lock device and, more particularly, to a lock device comprised of a separable cylinder assembly and housing assembly.

During the manufacture of furniture, for example, a lock device is often provided for a desk, chest or the like. Generally, it is necessary to attach the lock device to the furniture piece prior to finishing the furniture since attachment of the lock device requires various wood working steps such as mortising. On the other hand, it is often desirable to postpone attachment of a lock device until after the furniture is finished. This is desirable in order to avoid damaging the lock device or its operation by coating it with some type of finish such as paint or varnish.

Thus, it is desirable to have a lock device which can be attached to furniture in such a manner that the lock mechanism itself and, in particular, the internal workings of a tumbler mechanism will not be exposed to the furniture finishing process. Simultaneously, it is desirable to have the exposed parts of the lock housing available for finishing along with the finishing of the furniture piece. Finally, it is desirable to complete all wood working operations on the furniture prior to attachment of lock hardware.

SUMMARY OF THE INVENTION

In a principal aspect, the present invention comprises a lock device having a cylinder assembly and a housing assembly which are separable from one another. In this manner, the housing assembly may be mortised in furniture, for example, while the cylinder assembly may be retained separately from the housing assembly for later insertion or attachment to the housing assembly.

The housing assembly includes a spring retainer mechanism which is normally biased to engage and retain the cylinder assembly. Access for a tool is provided in the housing assembly so that the tool may be positioned to bias the spring retainer means out of engagement with the cylinder assembly. In this manner, the cylinder assembly may be either inserted or removed from cooperative attachment with the housing assembly.

Thus, it is an object of the present invention to provide a lock device wherein spring retainer means is positioned in a housing assembly for engagement with a removable cylinder assembly, the spring retainer means being movable and disengageable from the cylinder assembly only by a tool inserted into the housing assembly.

It is a further object of the present invention to provide a removable cylinder assembly and housing assembly wherein the cylinder assembly includes a mechanism for limiting the amount of rotation of the cylinder plug. In this manner, it is possible to provide a plurality of types of locks depending upon the type of bolt in the housing assembly as well as the particular type of cylinder assembly utilized.

Still another object of the present invention is to provide a lock device having a removable cylinder assembly that may be easily attached or detached from a housing assembly which is mortised or surface mounted. In this manner, repair, replacement or exchange of a cylinder assembly may be effected with a minimum of difficulty.

These and other objects, advantages and features of the present invention will be set forth in the detailed description which follows.

BRIEF DESCRIPTION OF THE DRAWINGS

In the detailed description which follows, reference will be made to the drawings comprised of the following FIGURES:

FIG. **1** is an exploded perspective view of a first preferred embodiment of the lock device of the present invention;

FIG. **2** is a front plan view of the lock device of FIG. **1** mounted in a piece of wood furniture or the like;

FIG. **3** is a side elevation of the improved lock device of FIG. **1** illustrating the manner in which it is mounted in wood panel;

FIG. **4** is a rear elevation of the lock device illustrated in FIGS. **2** and **3**;

FIG. **5** is an enlarged, partial cross-sectional view of the lock device shown in FIG. **2**;

FIG. **6** is a cross-sectional view of the interior of the lock device of the present invention taken substantially along the line **6—6** in FIG. **5**;

FIG. **7** is a cross-sectional view of the lock device of the present invention taken substantially along the line **7—7** in FIG. **5**;

FIG. **8** is an elevational, cross-sectional view substantially identical to the view of FIG. **6** illustrating the cylinder assembly removal tool position to permit removal of the cylinder assembly;

FIG. **9** is a side, cross-sectional view of the assembly shown in FIG. **8** taken substantially along the line **9—9**;

FIG. **10** is a side, cross-sectional view of the cylinder assembly of the embodiment of FIGS. **1–9** illustrating in greater detail the plug and cylinder construction utilized to limit the degree of rotation of the plug relative to the cylinder;

FIG. **11** is a top plan view of the cylinder assembly of FIG. **10** which is partially cut away to illustrate in greater detail the mechanism for limiting the degree of plug rotation;

FIG. **12** is a partial cross-sectional end view of the mechanism for limiting plug rotation shown in FIG. **11**;

FIG. **13** is a partial cross-sectional plan view illustrating an alternative embodiment of the mechanism for limiting plug rotation;

FIG. **14** is a cross-sectional view of the mechanism illustrated in FIG. **13** taken substantially along the line **14—14** in FIG. **13**;

FIG. **15** is still another partial, cross-sectional plan view illustrating another alternative embodiment of the plug rotation limitation mechanism;

FIG. **16** is a partial cross-sectional view of the mechanism illustrated in FIG. **15** taken substantially along the line **16—16**;

FIG. **17** is a partial cross-sectional view of a third alternative embodiment of the mechanism for limiting plug rotation;

FIG. **18** is a cross-sectional view of the interior of the housing similar to FIG. **7** illustrating an alternative dead lock bolt construction embodiment for the housing assembly of the invention; and

FIG. 19 is an end view of the housing illustrating another dead lock bolt configuration.

DESCRIPTION OF THE PREFERRED EMBODIMENT

The lock device of the present invention is generally illustrated in FIG. 1 which is an exploded perspective view of the various assemblies of the lock device. The lock device is comprised of a housing assembly **10** and a cylinder assembly **12.** The cylinder assembly **12** is operated by a key **14** to move a bolt **16** which is part of the housing assembly **10.**

Typically, the housing assembly **10** will be mortised in a wood panel **18** so that the bolt **16** is properly positioned to engage a strike positioned on a frame member (not shown) of the furniture. The cylinder assembly **12** is inserted through a cylindrical opening **20** in the wood panel **18** and is joined to the housing assembly **10** in a manner which is to be described below. Thus, the assembly lock device will appear as shown in FIGS. **2, 3** and **4.**

A tool **22** is fashioned to engage a retaining mechanism within the housing assembly **10** and move the retaining mechanism so that the cylinder assembly **12** may be removed for repair or replacement. The tool **22** is also used to move the retaining mechanism whenever a cylinder assembly **12** is being placed in the housing assembly **10.**

FIGS. **2, 3** and **4** illustrate the cylinder assembly **12** and housing assembly **10** incorporated in a wood panel **18.** The wood panel **18** is mortised and the housing assembly **10** is attached thereto by means of fastening screws **24, 25** and **26** extending through openings **34, 35** and **36** shown in FIG. **6.** The cylinder assembly **12** is inserted into an opening **21** in FIG. **1** of the housing assembly **10** and retained there by a spring mechanism. Opening **21** includes keyways **21***a*, **21***b*, **21***c* and **21***d* cooperative with key projections **23***a–d* respectively of cylinder **12** to hold the cylinder **12** in a non-rotatable position in housing **10.** A bolt actuating projection (not shown in FIGS. **2–4**) of cylinder assembly **12** is actuated in response to movement of a key **14** inserted in the cylinder assembly **12** to move the bolt **16** into and out of engagement with a strike (not shown).

The internal construction of the housing assembly **10** and cylinder assembly **12** is illustrated in greater detail in FIGS. **5, 6** and **7.** The housing assembly **10** includes a box **28** having a rear wall **30** and a circumferential wall **32.** Wall **30** includes a plurality of openings **34, 35** and **36** respectively for receipt of screws **24, 25** and **26** respectively. A bolt receiving chamber **38** is defined by the walls **30** and **32** on the interior of the box. A cap or plate **40** fits over the chamber **38** to retain a bolt **16** within the chamber **38.** Opening **21** is defined in cap or plate **40.**

In the construction illustrated in FIGS. **5, 6** and **7,** the bolt **16** is termed a spring bolt. Thus, unless otherwise noted, the bolt **16** will be termed a spring bolt **16.** The spring bolt **16** includes a projecting portion **42** and normally extends through opening **44** in wall **32** for engagement with a strike. The bolt **16** also includes transversely extending arms **46** and **48** that project outward from the axis of normal movement of the bolt **16.** The arms **46** and **48** include a countersunk bore or cut out **46**a and **48**a to cooperatively engage springs **50** and **52** respectively. Springs **50** and **52** are positioned by protrusions **54** and **56** of cap **40** respectively on shelves or protrusions **58** and **60** respectively of housing **10.**

The bolt **16** may be moved within the chamber **36** to project or retract portion **42** through opening **44.** The bolt **16** is guided by chamber walls **62** and **64** which are parallel to the direction of bolt movement. Walls **62** and **64** are recessed relative to the projecting arms **46** and **48** so that the arms **46** and **48** can freely engage the springs **50** and **52** and move to compress the springs **50** and **52.**

The bolt **16** also includes a center depression **66** which provides a camway for a driving cam mechanism associated with the cylinder assembly **12.** Referring in particular to FIG. **5,** the cylinder assembly **12** includes a cylinder **68** and a rotatable plug **70.** The key **14** may be inserted in a proper keyhole in the plug **70** to actuate a tumbler mechanism which, in turn, permits rotation of the plug **70** in a manner well known to those skilled in the art. The rotatable plug **70** includes an end projection **72** as illustrated in FIGS. **5** and **7.** The projection **72** fits within the depression **66** as illustrated in FIG. **6** and engages side walls of the depression **66** to thereby effect movement of the bolt **16** against the biasing force of spring **50** and **52.**

The shape of the depression may be defined to effect any desired movement of the bolt **16.** In other words, the depression **66** may be a channel or a portion of a channel rather than a substantially square depression as illustrated in FIG. **6.** The shape of the depression **16** in FIG. **6** as shown provides for the drawer, right-hand, or left-hand assemblies when combined with a properly set cylinder assembly.

One alternative depression shape is illustrated in FIG. **18** with its required depression shape for use on drawers. FIG. **19** illustrates a dead bolt housing assembly with its required depression shape for use on either right or left hand applications.

The mechanism for retaining the cylinder assembly **12** within the housing assembly is also illustrated in FIGS. **5, 6** and **7.** The retention mechanism depends upon the cooperative structure of the cylinder **68** and a retainer spring **78** in housing assembly **10.** That is, the plate or cap **40** includes the opening **21** through which the cylinder assembly **12** projects. The inner end of the cylinder assembly **12** and, in particular, the cylinder **68** includes four channels **74, 75, 76** and **77** which are circumferentially spaced at equal intervals about the outer surface of the cylinder **68.**

The cylinder retainer spring **78** includes a center section **80** which fits about an annular projection **82** in the chamber **38.** Projection **82** also defines the opening **35** for screw **25.** Opposite sides **84** and **86** of the retainer spring **78** are held in position by studs **88** and **90** respectively projecting from rear wall **30** into the chamber **38.** The sides **84** and **86** may be elastically deformed or spread so that the cylinder **68** and, in particular, the channels **74** and **75** can be positioned over sides **84** and **86** respectively. Upon release, the sides **84** and **86** fit in channels **74** and **75** respectively to hold cylinder **68.** The sides **84** and **86** terminate with horizontal extensions **94** and **96** respectively which are positioned over slots **98** and **100** respectively as seen in FIG. **6.**

The retainer spring **78** is operated in the following fashion. As illustrated in FIGS. **9** and **10,** tool **22** includes first and second projecting tabs **102** and **104** which are spaced a distance equal to the distance be-

tween slots **98** and **100.** The tabs **102** may thus be inserted into the slots **98** and **100** for engagement with the retainer spring **78** and, in particular, extensions **98** and **100.** The tool **22** which includes a manual pressure plate **106** may then be depressed to flex the retainer spring **78** to the phantom position illustrated in FIG. **8.** When the spring **78** is flexed to this position, the sides **84** and **86** are disengaged from the channels **74** and **75.** Thus, the cylinder assembly **12** may be withdrawn from the housing assembly **10** provided the retainer spring **78** remains in the depressed or phantom position shown in FIG. **8.**

It is to be noted that a replacement cylinder assembly can be positioned in the cylinder housing **10** only if the tool **22** is used to depress the retainer spring **78.** Thus, the tool **22** is used both for removal of a cylinder housing **12** and replacement or repositioning of a cylinder housing **12** within the housing assembly **10.**

FIGS. **10–14** illustrate in greater detail the construction of the cylinder assembly **12.** As mentioned previously, the cylinder assembly **12** includes a cylinder **68** having a rotatable plug **70** positioned therein. The construction of pin tumblers **108** and their cooperative relationship with the key **14** is known to those skilled in the art. The cylinder assembly **12** of the present invention does, however, include some additional features primarily relating to the structure to control the amount of and sense of rotation permitted by the plug **70.**

That is, the plug **70** includes a spiral groove **110.** The groove **110** extends for a single complete revolution about the plug **70.** First and second slideways **112** and **114** are defined in the cylinder housing adjacent the groove **110** parallel to the rotational axis of the plug **70.** A ball **116, 118** is positioned in the groove **110** and simultaneously within one or both of the slideways **112** and **114** to limit the degree and sense of rotation of the plug **70** within the cylinder **68.**

It is possible to place a single ball **116** in FIG. **12** or two balls as at **116** and **118** in FIG. **16** in the groove **110.** FIGS. **10, 11** and **12** illustrate the arrangement for a single ball **116** in groove **110** as provided in the embodiment of FIGS. **1–4.** FIGS. **13** and **14** illustrate another possible arrangement utilizing a single ball **116.** FIGS. **15** and **16** illustrate still another arrangement of utilizing two balls **116** and **118** to control the degree and sense of rotation of plug **70.** FIG. **17** illustrates another possible arrangement using a single ball **116** which is substantially the same as the configuration of FIGS. **13** and **14.**

With a single ball, it is possible to have a **360°** rotation of the plug **70** within the cylinder **68.** That is, the ball **116** will slide transversely in the slideway **112** and simultaneously within the groove **110.** When the end of the groove has been reached, rotation of the plug is no longer possible.

In the embodiment illustrated by FIGS. **10, 11** and **12,** the single ball **116** is positioned at the mid point of the groove **110** and in slideway **114.** Consequently, the key **14** which is in the vertical position when plug **70** is positioned in the manner illustrated in FIGS. **10–12** can be rotated 180° clockwise or counterclockwise to thereby retract portion **42** of bolt **16.** Of course, key **14** cannot be removed when the bolt is retracted.

In the embodiment of FIGS. **13** and **14,** a single ball **118** is positioned in groove **112** adjacent one end of groove **110.** The plug **70,** which is in the orientation illustrated by FIG. **10,** can be rotated a full 360° revolution in the clockwise direction. The ball **118** will then be in the position illustrated in FIG. **17** and the plug **70** may be rotated a full 360° in the clockwise direction.

The single ball configuration of FIGS. **13, 14** and **17** is used in combination with a dead bolt, wherein there is no normal biasing of the bolt to a projected position, and the key is to be moved 360° for both locking and unlocking the bolt. The single ball configuration is also used in spring bolt versions of the invention since key removal takes place only at one end of rotation.

Whichever application is being considered, the plug must be set within the cylinder assembly for proper lock function. The simplest procedure for setting the plug for operation of any bolt assembly is to rotate the plug within the cylinder in the opposite direction of that required for operating the bolt from locked to unlocked position, then insert the cylinder assembly into the bolt housing assembly using the tool as detailed previously.

The configuration of a groove **110** and two balls **116** and **118** within associated slideways **112** and **114** is illustrated in FIGS. **15** and **16.** As can be seen, the two balls **116** and **118** are utilized to limit the amount of rotation 180°. Depending upon the original orientation of the spiral groove **110** relative to the slideways **112** and **114** when the balls are inserted therein, it is possible to provide a construction which is limited to left-hand or right-hand, that is, clockwise or counterclockwise rotation of the plug **70.**

For example, referring to FIG. **15,** the groove **110** terminates at the forward end of slideway **112** and the middle portion of the groove **110** is positioned in the middle of slideway **114.** Consequently, the plug **70** can be rotated only in the counterclockwise sense as viewed in FIG. **16.** If ball **118** were placed at the opposite end of groove **110** in the phantom ball position **119,** then clockwise rotation of 180° only would be possible.

To assemble the two ball configuration, a ball is initially inserted in the groove **110** and slideway **114.** Then, the plug **70** is rotated opposite the direction required by the user until it reaches a stop position as effected by the ball **116.** A ball **118** is then added to the other slideway **112.** In this manner, the degree and sense of rotation of the plug **70** are determined.

Heretofore the description has concerned a spring bolt **16.** Other types of bolts are possible. A typical dead bolt construction as utilized with the present invention is illustrated in more detail in FIG. **18.** The dead bolt **120** includes projecting arms **122** and **124** one of which engages spring **126.** Spring **126** provides a biasing force perpendicular to the axis of movement of the bolt **120.** In other words, the spring **126** provides a friction force against the bolt **120** which tends to hold the bolt **120** in the position in which it is placed. The dead bolt **120** is not biased to any particular projected or retracted position.

Rather than a depression **66** as illustrated for the spring bolt **16,** the dead bolt **120** includes a channel **130** adapted to engage the projection **72** of the plug **70.** The projection **72** thus engages the channel **130** and positively drives or retracts the bolt **120** into a projected or a retracted position. The construction of the retainer spring **78** for the dead bolt configuration of the

invention is, however, the same as previously described for the spring bolt **16** device.

As can be appreciated by reviewing the foregoing disclosure, it is possible to select various combinations of springs, bolts and shape depressions within the bolt to effect various lock actions.

For example, it is possible to utilize other shapes of channels associated with a bolt to provide a right or left hand dead bolt door housing assembly. Therefore, this invention is to be limited only by the following claims and their equivalents.

What is claimed is:

1. A lock device comprising, in combination:

a housing assembly; and

a removable cylinder assembly;

said housing assembly including a housing with a chamber and a bolt opening, a bolt slidably mounted in said chamber, said bolt having at least one portion which may project through said bolt opening to engage a strike, said housing also including a cover over the chamber to retain the bolt in the housing, said cover including an opening for receipt of one end of said cylinder assembly;

said cylinder assembly including a cylinder and a rotatable plug in said cylinder, said plug including a projection at the end of the cylinder assembly inserted in said housing for engaging said bolt and driving said bolt in response to operation of said cylinder assembly in said housing;

said bolt including projecting arms extending normal to the direction of bolt travel, and also including a channel for receipt of said plug projection, whereby rotation of said plug and projection effect movement of the bolt;

spring means in the chamber biased against at least one bolt arm;

a bifurcated spring blade mounted in said housing and extending into the chamber to engage slots in the end of the cylinder inserted in the housing and hold said cylinder assembly when in said housing; and

access openings in said housing for receipt of a tool to move said spring blade out of engagement with the cylinder slots to permit insertion of or removal of said cylinder means from said housing.

2. The device of claim **1** wherein said bolt comprises a spring bolt and said spring means comprise coil springs engaging said arms to bias the bolt to an extended position through the bolt opening of said housing.

3. The device of claim **1** wherein said bolt comprises a dead bolt and said spring means comprise a leaf spring frictionally engaging said dead bolt to hold said dead bolt in either a projected or a retracted position.

4. The device of claim **1** wherein said cylinder assembly includes means for limitation of rotation of the plug relative to the cylinder of said assembly.

5. The device of claim **4** wherein said means for limiting rotation comprise at least one cooperative member simultaneously engaged with portions of said plug and said cylinder.

6. The device of claim **4** wherein said means for limiting rotation comprises a ball member positioned simultaneously within a slideway associated with one of the other of said plug and cylinder and a spiral groove associated with the other of said plug and said cylinder.

7. The device of claim **6** wherein said ball member comprises a single ball member which limits the rotation of said plug to 360°.

8. The device of claim **6** wherein said cylinder assembly includes first and second balls simultaneously positioned within said groove and first and second separate, parallel slideways.

9. A cylinder assembly of the type used in cooperation with locking mechanisms, comprising in combination a cylinder with a rotatable plug therein, said plug and cylinder including a key actuated tumbler mechanism for locking and unlocking the plug relative to the cylinder, said plug having an end projection for engagement with a bolt to thereby drive said bolt, at least one slideway defined in one of said plug and said cylinder and a circumferential groove associated with the other of said plug and cylinder, said groove and slideway having positioned therein simultaneously at least one connecting member, said groove having ends which in cooperation with said connecting member engage the slideway to limit the amount of rotation of said plug whenever the tumbler mechanism is key actuated, whereby the position of the bolt is controlled in response to rotational limits imparted to the plug end projection.

* * * * *