United States Patent [19]

Willis

[11] **3,818,467**

[45] **June 18, 1974**

[54] **DAMAGE DETECTION**

[75] Inventor: **John George Willis,** Wakefield, Mass.

[73] Assignee: **Solid State Technology, Inc.,** Wilmington, Mass.

[22] Filed: **Feb. 1, 1973**

[21] Appl. No.: **238,954**

[52] **U.S. Cl.** ..... **340/224,** 340/262, 340/282, 340/333, 200/61.48, 310/75 A, 325/185, 290/1 E

[51] **Int. Cl.** **G08b 23/00**

[58] **Field of Search** ..... 340/52 H, 65, 224, 262, 340/282, 333; 200/61.5, 61.48; 310/75 R, 75 A, 113, 168; 325/119, 185; 290/1 E

[56] **References Cited**

UNITED STATES PATENTS

2,176,770	10/1939	Maught	200/61.5
2,389,514	11/1945	Kennedy	310/75 A
3,614,760	10/1971	Zimmet	340/224
3,646,583	2/1972	Scuderi	340/52 H
3,668,675	6/1972	Joens	340/65
3,735,412	5/1973	Kampmeyer	310/75 A

Primary Examiner—John W. Caldwell
Assistant Examiner—Richard P. Lange

[57] **ABSTRACT**

Damage detection apparatus for use on a normally vertical post supporting a remote signalling device including a radio transmitter, comprising an electric generator having output terminals connected to the transmitter, a source of mechanical energy, and means for applying mechanical energy from the source to cause operation of the generator and the transmitter when the orientation of the post departs from the vertical by a predetermined amount.

11 Claims, 1 Drawing Figure

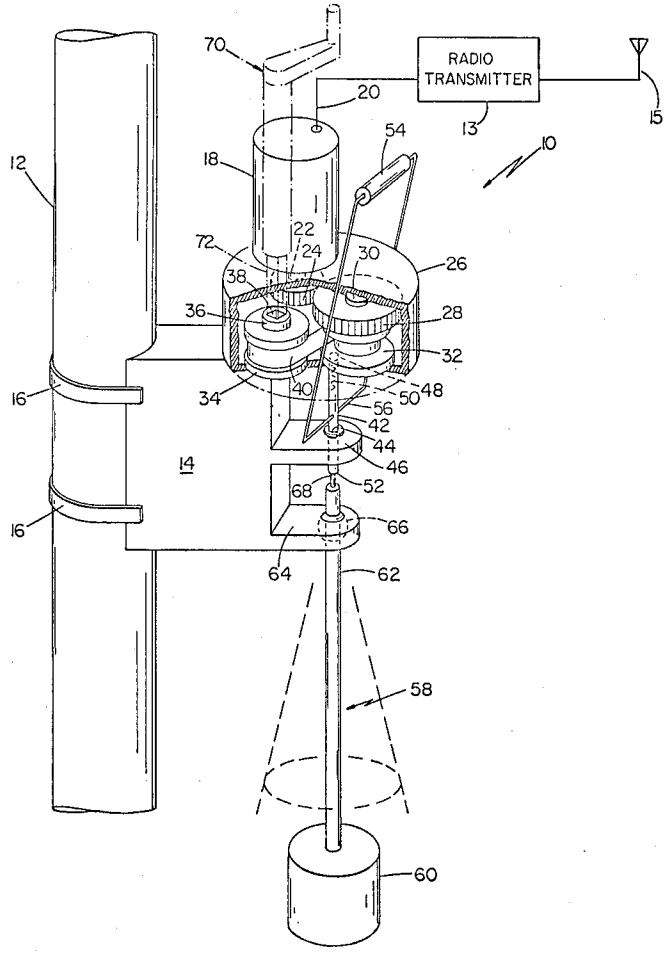

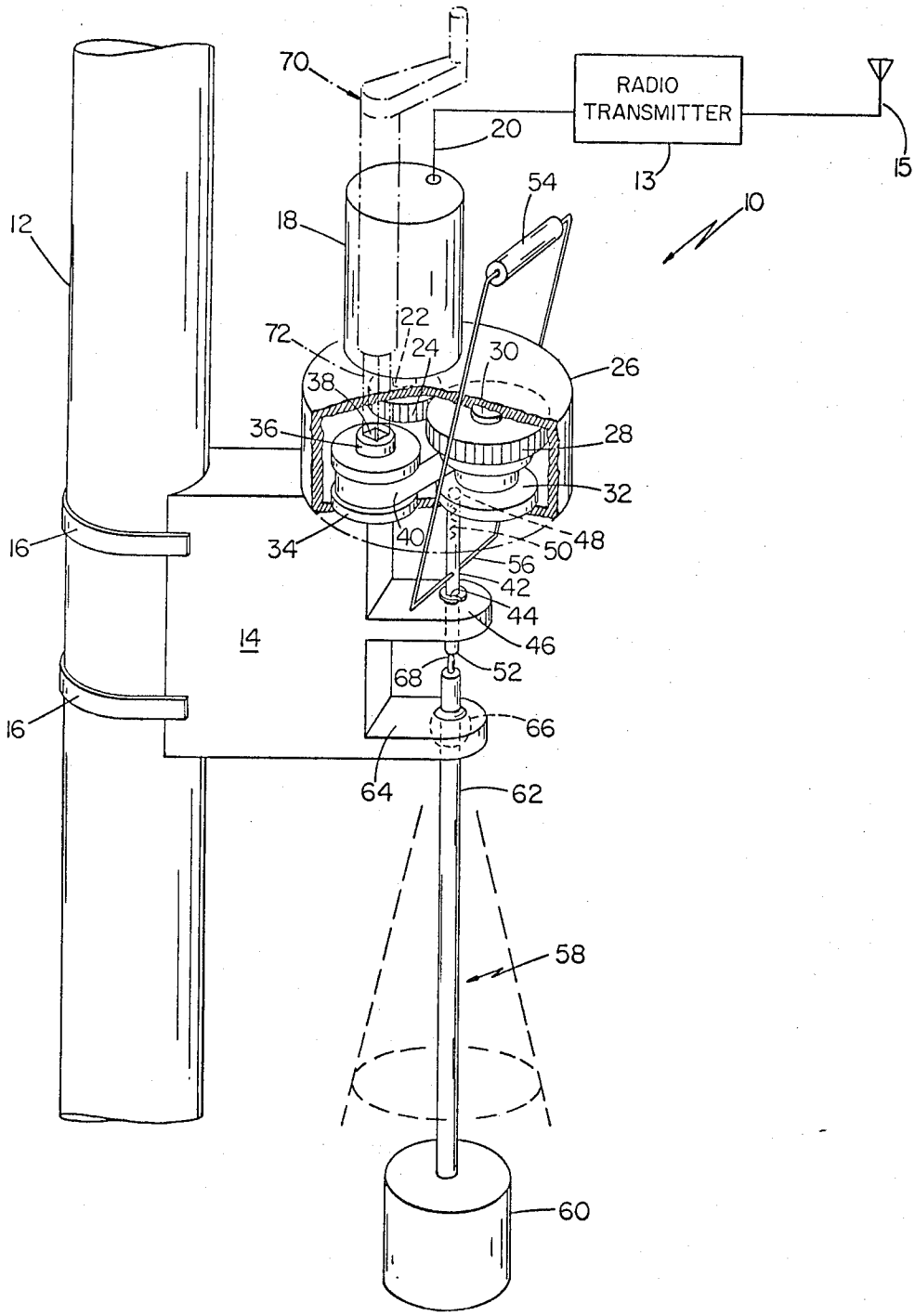
RADIO
TRANSMITTER
70
20
13
15
54
10
12
18
22
72
24
30
26
38
36
28
32
16
34
40
50
48
56
42
44
14
46
68
52
16
66
64
62
58
60

DAMAGE DETECTION

This invention relates to apparatus for detecting and indicating a change in orientation, with respect to a vertical reference axis, of a support upon which the apparatus is mounted.

For years, there has existed an unsatisfied need for a simple batteryless wireless signalling system for use in locations where electrical power is either not available or is subject to failure under conditions in which the signalling system is most needed. The former situation is present in modern superhighway systems, which at present must be constantly patrolled by radio-equipped vehicles for the motorists' protection. The latter situation arises in newly developed residential areas remote from urban centers, where fire protection must be provided in the form of fire alarm boxes which at present require an expensive independent underground wiring system for protection from the elements.

This need has been fulfilled by the manually powered, wireless electrical signalling systems described in U.S. Pat. No. 3,621,398 to Willis. The elimination of wires in such a signalling system, however, makes it difficult to send test signals to the various transmitter units (typically pole-mounted emergency boxes spaced along superhighways) to verify the continued operability of the units which are exposed to damage via vehicular collision with the units' supporting posts.

In view of the foregoing, it is a principal object of the present invention to provide apparatus which will detect and indicate a change in orientation of a support, while being reliable in operation and inexpensive to manufacture and install.

It is a further object to provide such apparatus which requires neither batteries nor an external source of energy for its operation.

It is an additional object to provide such apparatus which is rugged in construction and easy to reset.

These and other objects of the invention are accomplished by providing damage detection apparatus for use on a normally vertical post supporting a remote signalling device including a radio transmitter, comprising an electric generator having output terminals connected to said transmitter, a source of mechanical energy, and means for applying mechanical energy from said source to cause operation of said generator and said transmitter when the orientation of said post departs from the vertical by a predetermined amount.

Still further objects, features, and advantages will appear from the following description of a preferred embodiment taken together with the accompanying drawing.

Referring to the drawing, the apparatus **10** is mounted on a support **12** in the form of a vertical post, such as is suitable for supporting a highway remote alarm system including a suitable radio transmitter **13** having an antenna **15**. A frame member **14** of the apparatus **10** is provided with straps **16** which encircle the post **12** and are drawn tightly to grip the post. A suitable enclosure (not shown) for the apparatus may be secured to the frame **14** or the post **12**.

An electric generator **18**, having output leads **20** connected to radio transmitter **13**, is mounted such that its shaft **22** is vertically disposed. Gear **24** is keyed to shaft **22** and is rotatably supported on a member **26** which is secured to the frame **14**. Gear **28**, engaged with gear **24**, is secured to shaft **30** and is also mounted for rotation with respect to member **26**. Spool **32** is also secured to shaft **30**. Storage spool **34** is mounted for rotation with respect to member **26** and includes an upwardly projecting axial portion **36** having a square opening **38** in its upper face. Spiral spring **40** is formed from a flat web of metal and has its opposite ends secured to spools **32** and **34** respectively. The lower, downward facing surface of spool **32** has a 45° latch detent (not visible) spaced outwardly from shaft **30**.

Elongated member **42** is vertically disposed in opening **44** of an arm **46** which projects from the main body of frame **14**. The upper end of member **42** has a ball **48** partially protruding therefrom and upwardly biased by means of internal spring **50**. The lower end **52** of member **42** is smoothly rounded with a 0.25 inch radius. Reset handle **54** is secured to member **42** by means of rod **56** which passes through member **42** intermediate ball **50** and opening **44**.

Pendulum **58** comprises weight **60** and arm **62** which is mounted in projection **64** of frame member **14** in a ball joint support **66**. The upper portion of arm **62** is of reduced diameter and has a smoothly rounded upper end **66** having a radius of three thirty-seconds inch.

Crank **70** is separable from the remainder of the apparatus and has a lower shaft portion **72** having a cross section of appropriate shape and size to fit snugly within opening **38** on spool **34**.

The operation of the apparatus is as follows. The spring **40** is a constant force spring which in its unstressed configuration assumes a spiral configuration around spool **32**. When the lower end **72** of crank **70** is inserted into opening **38** on spool **34** and the crank is rotated clockwise, the spring **40** is wound onto spool **34** in a spiral of opposite sense from that which it assumes in its unstressed configuration. The potential energy of the stressed spring **40** is stored by means of the spring loaded ball **48** being seated in the latch detent on the lower surface of spool **32**, thereby preventing rotation of spool **32**. Upon withdrawal of ball **48** from the latch detent, the potential energy of spring **40** as wound on spool **34** is converted into kinetic energy of rotation of spool **32** and gear **28** as the spring **40** produces such rotation in assuming its unstressed configuration as wound upon spool **32**. The nature of spring **40** as described above produces a constant velocity of rotation of the gear **28** for virtually the entire duration of the rotation.

This rotation of gear **28** causes rotation of gear **24** and consequent operation of generator **18** which provides an output on leads **20** for the operation of radio transmitter **13**. Since the vertically slidable member **42** is supported by pendulum **58** (surfaces **52** and **68** being in contact) with ball **48** received in the latch detent on spool **32**, the application of the energy stored in the spring to cause generation of a signal is restrained. If the post **12** should deviate from its vertical orientation, the fact that pendulum **58** will tend to remain in a truly vertical orientation will cause relative rotation between surfaces **52** and **68**. After sufficient displacement of post **12** the rotation between surfaces **52** and **68** will be sufficient to permit member **42** to slide with respect to the frame **14** under the influence of spring **50** and/or gravitational attraction so as to withdraw ball **48** from the latch detent on spool **32**. Thus, a sufficient departure from the predetermined orientation of post **12** (i.e., vertical) will release the mechanical energy stored in spring **40** and operate the electrical generator **18** to

cause the generation of a radio signal from transmitter **13.** This signal, which may be coded by conventional techniques, will be transmitted to a central location for detecting the signal so transmitted thus enabling repair and/or emergency equipment to be directed to the particular post **12** which has been damaged or knocked over.

As will be evident to those skilled in the art, from geometrical considerations, the relation of the radii of curvature of surfaces **52** and **68** will be the dominant factor which determines how much tilt of post **12** (or, equivalently, the departure from axial alignment between member **42** which remains parallel to the post **12** and arm **62** which remains vertical) will be required to cause disengagement of surfaces **52** and **68** with consequent application of the stored energy in spring **40** to produce an electrical output on leads **20** for operating transmitter **13.** For the values given above, a 15° departure of post **12** from the vertical in any direction will cause the disengagement of surfaces **52** and **68.**

The apparatus as described is reset by lifting reset handle **54** to cause the re-engagement of surfaces **52** and **68,** the use of crank **70** to rewind the spring **30** from spool **32** onto spool **34,** and the insertion of ball **48** in the latch detent on spool **32.**

While a particular embodiment has been described in detail, other embodiments will occur to those skilled in the art and are within the following claims.

What is claimed is:

1. Apparatus for use on a normally vertical post supporting a remote signalling device including a radio transmitter, comprising an electric generator having output means connected to said transmitter, a source of mechanical energy, and means for applying mechanical energy from said source to cause operation of said generator and said transmitter when the orientation of said post departs from the vertical by a predetermined amount.

2. Apparatus as claimed in claim **1** wherein said means for applying energy comprises

a first member movable between first and second positions and disposed, when in said first position, to restrain the application of energy from said energy source to said generator, said first member being biased toward said second position,

a second member supported for pivotal movement about a horizontal axis between first and second positions with respect to said post,

said second member in its first position retaining said first member in its first position and said second member in its second position releasing said first member for movement to its second position under the influence of said bias.

3. Apparatus as claimed in claim **2** wherein said first member includes a rounded surface having a first predetermined radius, said second member includes a rounded surface having a second predetermined radius in contact with said rounded surface of said first member when each said member is in its respective first position.

4. Apparatus as claimed in claim **3** wherein said second member comprises a pendulum including an elongated arm and a weighted lower end, said rounded surface of said second member being at the upper end thereof.

5. Apparatus as claimed in claim **4** wherein said source of mechanical energy comprises a spring normally maintained in a stressed configuration.

6. Apparatus mountable on a support for detecting a deparature from a predetermined orientation of said support comprising an electric generator, a source of mechanical energy, and means for applying energy from said source to cause operation of said generator when said departure exceeds a predetermined magnitude, said means comprising

a first member movable between first and second positions and disposed, when in said first position, to restrain the application of energy from said energy source to said generator, said first member being biased toward said second position,

a second member supported for pivotal movement about a horizontal axis between first and second positions with respect to said support,

said second member in its first position retaining said first member in its first position and said second member in its second position releasing said first member for movement to its second postion under the influence of said bias.

7. Apparatus as claimed in claim **6** wherein said first member includes a rounded surface having a first predetermined radius, said second member includes a rounded surface having a second predetermined radius in contact with said rounded surface of said first member when each said member is in its respective first position.

8. Apparatus as claimed in claim **7** wherein said second member comprises a pendulum including an elongated arm and a weighted lower end, said rounded surface of said second member being at the upper end thereof.

9. Apparatus mountable on a support for detecting a departure from a predetermined orientation of said support comprising an electric generator, a source of mechanical energy, and means for applying energy from said source to cause operation of said generator when said departure exceeds a predetermined magnitude, said means comprising

a first member movable between first and second positions and disposed, when in said first position, to restrain the application of energy from said energy source to said generator, said first member being biased toward said second position,

a second member supported for pivotal movement about a horizontal axis between first and second positions with respect to said support,

said second member in its first position retaining said first member in its first position and said second member in its second position releasing said first member for movement to its second position under the influence of said bias.

10. Apparatus as claimed in claim **9** further including a radio transmitter connected to said generator.

11. Apparatus mountable upon a support responsive to a departure from a predetermined orientation of said support comprising

an electric generator,

a source of mechanical energy comprising a spring normally maintained in a stressed configuration,

means for applying energy from said spring to cause operation of said generator when said departure exceeds a predetermined magnitude, said means comprising

a first member movable vertically between first and second positions and disposed, when in said first position, to restrain the application of energy from said spring to said generator, said first member being biased towards said second position, said first member including a rounded surface having a first predetermined radius at its lower vertical end;

a second member comprising a pendulum supported for pivotal movement about a horizontal axis between first and second positions with respect to said support, said second member in its first position retaining said first member in its first position and said second member in its second position releasing said first member for movement to its second position under the influence of said bias, said second member including an elongated arm, a weighted lower end, and a rounded surface at its upper end, said rounded surface, when each of said first and second members is in its first position, being in contact with said rounded surface of said first member.

* * * * *