United States Patent [19]

Vasas

[11] **3,817,637**

[45] **June 18, 1974**

[54] **PORTAL SEAL AND WIPER FOR PRODUCT CONTAINER**

[75] Inventor: **Martin M. Vasas**, Fairfield, Conn.

[73] Assignee: **The Bridgeport Metal Goods Manufacturing Company,** Bridgeport, Conn.

[22] Filed: **Apr. 30, 1973**

[21] Appl. No.: **355,878**

[52] **U.S. Cl.** **401/122**
[51] **Int. Cl.** **A45d 36/19**
[58] **Field of Search** 401/118–130; 15/104.92, 257.05

[56] **References Cited**

UNITED STATES PATENTS

3,195,545	7/1965	Lederberg et al.	401/122
3,415,604	12/1968	Ahrens et al.	401/122
3,662,769	5/1972	Vasas	401/122 X

FOREIGN PATENTS OR APPLICATIONS

906,750	9/1962	Great Britain	401/122

Primary Examiner—Lawrence Charles
Attorney, Agent, or Firm—Wooster, Davis & Cifelli

[57] **ABSTRACT**

A diaphragm is structured with distinct annular portions and each portion is configured to present particular flexure characteristics along the operational axis of a product container. Dimensional parameters are applied to each portion in adapting the flexure characteristics thereof to provide either a sealing action and/or a wiping action against a product applicator. The diaphragm can be incorporated integrally on a sealing gland of a reservoir assembly which functions cooperatively with the applicator to create the product container. Within the reservoir assembly the sealing gland is interlocked on a portal bushing to simplify the construction, while achieving a peripheral seal of predetermined parameters about the portal bushing.

12 Claims, 6 Drawing Figures

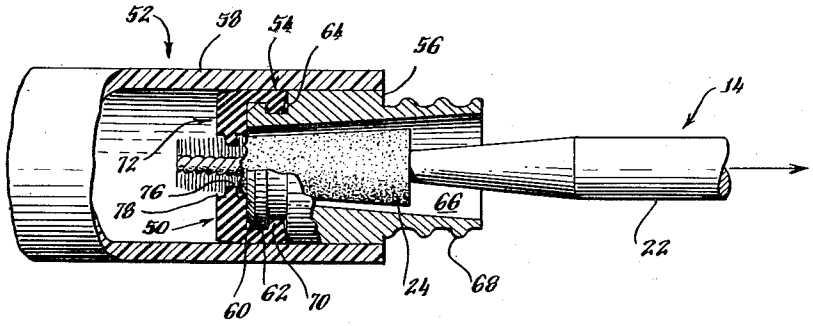

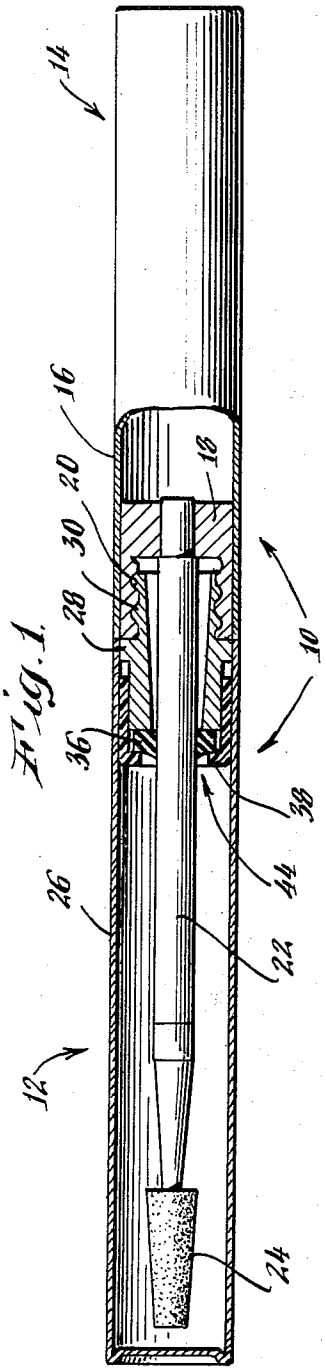

Fig. 1.

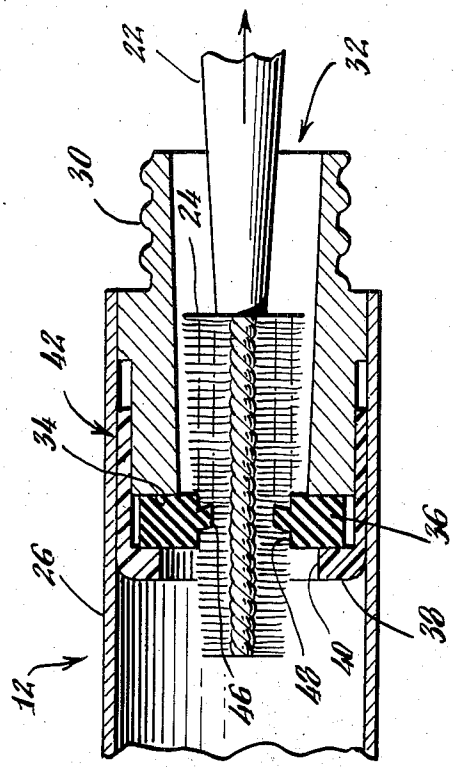

Fig. 2.

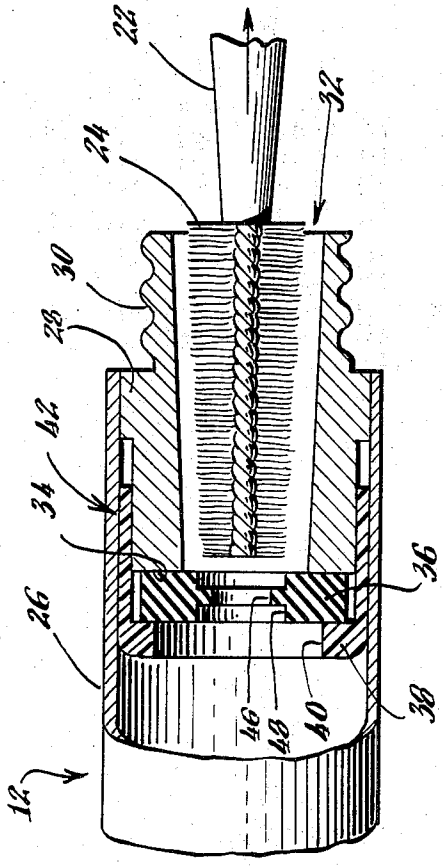

Fig. 3.

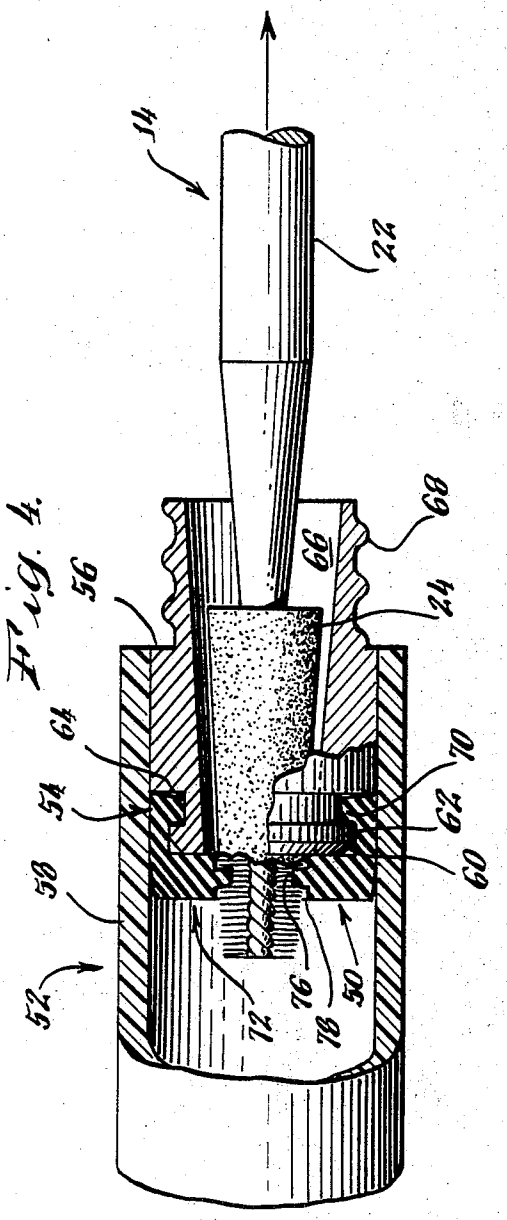

Fig. 4.

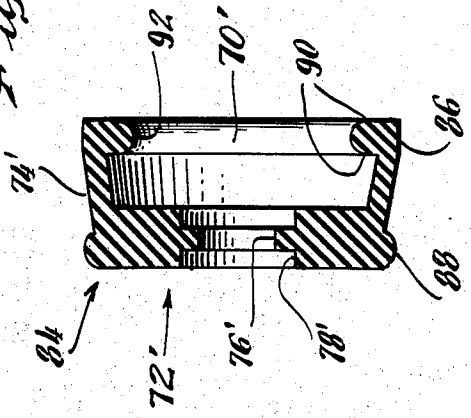

Fig. 6.

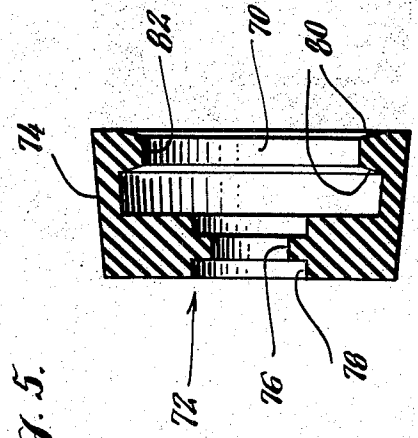

Fig. 5.

PORTAL SEAL AND WIPER FOR PRODUCT CONTAINER

BACKGROUND OF THE INVENTION

The present invention relates to a flexible diaphragm for use in a reservoir assembly to seal about and wipe against an applicator, especially such a diaphragm having distinct diametral portions to present particular flexure characteristics in the operational direction of the applicator. Diaphragms can be utilized within reservoir assemblies containing products for a wide variety of purposes, such as cosmetics, paint, glue, or medicine, and these products can be in many different forms, such as liquid, gel, or compressed powder. For most products, the applicator is detachably joined to the reservoir assembly in creating a product container. The product is stored in the reservoir assembly and is dispensed therefrom by a tip which extends from the applicator on a shaft. During withdrawal of the applicator from the reservoir assembly, the diaphragm provides a wiping action over the tip and when the product container is closed, the diaphragm provides a portal seal around the shaft. The wiping action removes excess product from the tip and provides a means for controlling the amount of product that is carried thereby.

Since the products stored in such containers are used for many purposes and have very different physical characteristics, the structural natures of both the reservoir assembly and the applicator will vary for each product. Of course, the storage capacity is the primary consideration when structuring the reservoir assembly, however, applicators exist with tips of widely varying natures. Some tips have bristles in either longitudinal or radial arrangement, while other tips have only spiral grooves and still other tips are made of either felt or cellular foams in both the open and closed cell varieties. Depending on the type of tip utilized and the product control desired, the wiping action will occur at a particular diametral location from the operational axis of the applicator whereas the portal seal always occurs at the diameter of the shaft. For most product applications, the wiping action and portal seal occur at different diametral locations and, furthermore, the forces exerted thereby are of different magnitudes. Diaphragms in such product applications must present a different flexure characteristic at each diametral location and, therefore, tend to have very complex cross-sectional configurations. Since these flexure characteristics are unique for each product application, little similarity exists between diaphragms now in use and, therefore, diaphragms for new product applications are usually developed by empirical analysis which is very time consuming and expensive.

A portal bushing provides an access into a reservoir body in the conventional reservoir assembly and in addition to the portal seal discussed above, a peripheral seal must be accomplished therebetween. As mentioned in my copending application Ser. No. 348,103 filed on Apr. 5, 1973, sealing glands which provide both the portal seal and the peripheral seal are known. Such sealing glands include a tubular frame which is compressed between the portal bushing and the reservoir body to achieve the peripheral seal and a diaphragm extends across one end of the tubular frame to achieve the portal seal. For the same reasons as discussed above, diaphragm configurations within these sealing glands tend to be very complex and unique to each product application so that adaptation thereof for new product applications is very time consuming and expensive. Furthermore, these sealing glands are made of highly compressible material and are retained to the bushing with a stretch fit thereover. Therefore, the interfacing surface at the peripheral seal is not controllable, as the component parts vary within allowable tolerance. In addition to this, it is desirable to have the sealing gland joined reliably to the portal bushing as a subassembly for inventory purposes, however, the stretch fit provides no interlock by which the integrity of the subassembly would be assured.

SUMMARY OF THE INVENTION

It is, therefore, a general object of the present invention to provide a portal seal and wiping action in a reservoir assembly with a flexible diaphragm which minimizes and obviates the disadvantages of the prior art.

It is a specific object of the present invention to provide a portal seal and wiping action in a reservoir assembly with a flexible diaphragm which includes distinct diametral portions for exerting predetermined forces against an applicator at specific diametral locations.

It is a more specific object of the present invention to provide a portal seal and wiping action in a reservoir assembly with a flexible diaphragm which is substantially rectangular in cross-sectional configuration.

It is another object of the present invention to incorporate a diaphragm having distinct sealing and wiping portions of rectangular cross-sectional configuration into a sealing gland which develops a peripheral seal over a minimal surface between a portal bushing and a reservoir body.

It is still another object of the present invention to incorporate a diaphragm having distinct sealing and wiping portions of rectangular cross-sectional configuration into a sealing gland which interlocks to a portal bushing for assuring subassembled integrity therewith.

It is a further object of the present invention to incorporate a diaphragm having distinct sealing and wiping portions of rectangular cross-sectional configuration into a sealing gland which develops a peripheral seal of relatively precise predetermined parameters between a portal bushing and a reservoir body.

These objects are accomplished in one form by configuring the diaphragm annularly of distinct coaxial portions. Each portion is utilized to perform a particular function against the applicator in that the inner portion provides the wiping action while the outer portion provides the portal seal. Both portions have rectangular cross-sections of which the dimensional parameters can be adapted to provide specific flexure characteristics. Therefore, the diaphragm can be structured to exert sealing and wiping forces of predetermined magnitudes at particular diametral locations. Furthermore, where a sealing gland is utilized to provide both peripheral and portal seals within a reservoir assembly, the diaphragm of this invention can be incorporated integrally thereon to achieve the portal seal.

BRIEF DESCRIPTION OF THE DRAWINGS

The manner in which these and other objects of the

invention are achieved will be best understood by reference to the following description, the appended claims, and the Figures of the attached drawings wherein:

FIG. 1 is an elevational view of a product container with portions thereof cut away to disclose the internal components which include the diaphragm of this invention;

FIG. 2 is an enlarged partial sectional view thereof with the applicator being withdrawn from the reservoir assembly and illustrating the wiping action imposed by the diaphragm over the tip of the applicator;

FIG. 3 is a view similar to FIG. 2 but illustrating the undistorted cross-sectional configuration of the diaphragm;

FIG. 4 is an elevational view of a product container with portions thereof cut away to disclose the internal components which include a sealing gland having the diaphragm of this invention integrally incorporated thereon;

FIG. 5 is an enlarged cross-sectional view of the sealing gland utilized in FIG. 4 and illustrating an annular lip and the diaphragm of this invention thereon; and

FIG. 6 is a view similar to FIG. 5 of another sealing gland with the diaphragm of this invention integrally incorporated thereon and illustrating a right cylindrical portion which is disposed to provide a peripheral seal of predetermined parameters.

DESCRIPTION OF THE PREFERRED EMBODIMENT

Turning now to the drawings and more particularly to FIG. 1, there is illustrated a product container 10 in which a reservoir assembly 12 and an applicator 14 are detachably joined. The applicator 14 is constructed of a cylindrical shell 16 within which is mounted a cup-shaped insert 18 providing female threads 20 and securing one end of a shaft 22. At the other end of the shaft 22, radially aligned bristles form a tip 24 to which product adheres when the applicator 14 is joined to the reservoir assembly 12. Although tip 24 is the only type illustrated throughout this disclosure, the diaphragm of this invention can be adapted to product containers which utilize applicators with other types of tips. Therefore, product applications requiring either felt or cellular foam tips, as well as those requiring tips with spiral grooves or longitudinally aligned bristles are within the scope of this invention.

Construction of the reservoir assembly 12 is illustrated in FIG. 2 where a reservoir body 26, sized in accordance with the amount of product stored, is specially configured to receive and fixedly retain a portal bushing 28. Male threads 30 are disposed on the bushing 28 for mating with the female threads 20 on the applicator 14 when joining the reservoir assembly 12 thereto. The bushing 28 has an open ended chamber 32 therein to serve as a portal through which the applicator 14 gains access into the reservoir assembly 12. One end of the bushing 28 is specially configured with a counterbore 34 to locate a diaphragm 36 and a sealing cup 38 is affixed to the bushing 28 by an interference fit to retain the diaphragm 36 in the counterbore 34. An aperture 40 is disposed in the sealing cup 38 to symmetrically align about the portal axis of the bushing 28. To prevent leakage of product from the reservoir assembly 12, a peripheral seal 42 must be provided around the bushing 28 and a portal seal 44 must be provided therein. The portal seal 44 is developed by the diaphragm 36 which forcibly bears against the shaft 22 and the peripheral seal 42 is developed by the sealing cup 38 which is compressed between the reservoir body 26 and the bushing 38.

As illustrated in FIG. 3, the diaphragm 36 is annularly configured and has an inner diametral portion 46 and an outer diametral portion 48. Both portions 46 and 48 have rectangular cross-sections and the diaphragm 36 may be fabricated of any suitable elastic material, such as an elastomeric or with any suitable process, such as molding.

When the applicator 14 is not in use, it is joined to the reservoir assembly 12 and the portal seal 44 is provided therebetween by the outer diametral portion 48 which is distorted along the annular axis of the diaphragm 36 to exert radial forces against the shaft 22, as illustrated in FIG. 1. When the applicator 14 is used to dispense product, it is withdrawn from the reservoir assembly 12 and a wiping action is provided over the tip 24 by the inner diametral portion 46 which is distorted along the annular axis of the diaphragm 36 to exert radial forces thereagainst, as illustrated in FIG. 2. Although the diametral portions 46 and 48 are both of rectangular cross-sectional configuration, each has an inside diameter and a thickness along the annular axis of the diaphragm 36 which are distinct from those of the other. Therefore, each diametral portion 46 or 48 has distinctive flexure characteristics along the annular axis of the diaphragm 36 and exerts radial forces of particular magnitudes and at particular diametral locations against the applicator 14. Further more, the dimensional parameters of either diametral portion 46 or 48 can be adapted to provide predetermined flexure characteristics in adapting the diaphragm 36 to new product applications. Therefore, the empirical analysis normally required with diaphragms of more complex cross-sectional configurations is avoided and economies are thereby realized.

Of course, parameters other than the inside diameters or the thicknesses along the annular axis affect the flexure characteristics of the diametral portions 46 and 48, such as the durometer of the material utilized in the diaphragm 36. Therefore, any of these parameters or combination thereof can be utilized to adapt the diaphragm 36 to particular product applications. Furthermore, the flexure characteristics of either diametral portion 46 or 48 could be determined by disposing radial slits therethrough. Of course, the flexure characteristics would then depend on the length of the radial slits so that the diaphragm could be fabricated without the radial slits and thereafter adapted to particular product applications by adding the radial slits. Furthermore, radial slots having an open space thereacross could be utilized where greater flexibility is desired in the diametral portions 46 and 48 than can be accomplished with the radial slits.

Because the diametral portions 46 and 48 are integrally connected, the flexure characteristics of one diametral portion will influence the flexure characteristics of the other diametral portion. The significance of this influence will depend on the relative thicknesses of the diametral portions and the location of the integral connection therebetween along the annular axis of the diaphragm. Although the inner diametral portion 46 is illustrated in the drawings as being centrally located within the outer diametral portion 48 along the annular axis of the diaphragm 36, no reason is known to pre-

clude its being located at either axial end of the diaphragm should the product application so require.

As illustrated in FIG. 4, a sealing gland 50 can be configured and disposed within a reservoir assembly 52 to provide both a peripheral seal 54 and a portal seal. In this arrangement, the sealing gland 50 is affixed on the end of a portal bushing 56 which is fixedly retained within a reservoir body 58 by any suitable means, such as an interference fit. One end of the bushing 56 is specially configured to interlock with the sealing gland 50 in that a tapered lead 60, an annular shoulder 62 and an annular groove 64 are provided. Otherwise, the bushing 56 is configured identically to the bushing 28 shown in FIGS. 1 – 3 in that an open ended chamber 66 exists therethrough and male threads 68 are disposed thereon. In FIG. 4, the applicator 14 is identical to that shown in FIGS. 1 – 3 and, therefore, the parts thereof are identified with the same reference numerals as used in FIGS. 1 – 3.

The structural makeup of the sealing gland 50 is illustrated in FIG. 5 where an annular lip 70 and a diaphragm 72 configured in accordance with this invention are integrally disposed on a tubular frame 74. The diaphragm 72 is disposed across the longitudinal axis of the tubular frame 74 at one axial end thereof, whereas the annular lip 70 is disposed on the interior wall of the tubular frame 74 at the other axial end thereof. The tubular frame 74 is conically shaped, being of minimum diameter at the diaphragm end and of maximum diameter at the annular lip end. The cross-sectional configuration of diaphragm 72 is identical to that of diaphragm 36 shown in FIGS. 1 – 3 and is, therefore, substantially rectangular with an inner diametral portion 76 and an outer diametral portion 78, of rectangular cross-sectional configurations. In cross-section, the annular lip 70 is trapezoidal with converging sides 80 extending inwardly toward the axis of the tubular frame 74 and a flat face 82 extending across the converging sides 80. Any suitable elastic material may be utilized to fabricate the sealing gland 50, such as an elastomeric, and any suitable process may be utilized for its fabrication, such as molding.

When utilized within the reservoir assembly 52, the sealing gland 50 is interlocked to the bushing 56 with the annular lip 70 engaging into the annular groove 64 and thereby a subassembly of highly reliable integrity is created. Of course, the annular lip 70 must be expanded to pass over the annular shoulder 62 on the bushing 56, however, due to the elastic nature of the sealing gland 50 and the tapered lead 60 on the bushing 56, this presents no great difficulty. The subassembly of the sealing gland 50 and bushing 56 is then joined with the reservoir body 58 by locating the sealing gland 50 into the open end thereof and forcibly inserting the bushing 56 thereinto. During insertion, the conical taper and elastic nature of the tubular frame 74 are effective to centrally locate the sealing gland 50 within the reservoir body 58 and thereby establish a symmetrically distributed interface thereagainst.

Functionally, within the reservoir assembly 52 the peripheral seal 54 is created by the sealing gland 50 at the symmetrically distributed interface, as illustrated in FIG. 4. This is so because radially directed sealing forces are developed within the sealing gland 50 between the bushing 56 and the reservoir body 58 due to the tubular frame 74 and the annular lip 70 being compressed therebetween. The peripheral seal 54 covers a minimal surface of cylindrical area which is equal to the inner periphery of the reservoir body 58 at the symmetrically distributed interface multiplied by the width of the flat face 82. Because the magnitude of compression is proportional to the combined radial thickness of the tubular frame 74 and the annular lip 70, the force exerted by the peripheral seal 54 can be predetermined within relatively precise limits by merely varying this combined thickness. The proportionality factor relating the sealing forces to the amount of compression can be either linear or nonlinear depending on the cross-sectional configuration of the annular lip. Since the annular lip 70 is trapezoidal in cross-sectional configuration, the proportionality factor will increase with increasing compression and, therefore, is nonlinear.

The outer diametral portion 78 of the diaphragm 72 develops the portal seal by exerting radial forces against the shaft 22 of the applicator 14 in the same manner as previously discussed for diaphragm 36 and shown in FIG. 1. As also discussed previously for diaphragm 36 and shown in FIG. 2, the inner diametral portion 76 of the diaphragm 72 imposes a wiping action over the tip 24. Of course, the portal seal and the wiping action will again exert particular forces at particular diametral locations depending on the flexure characteristics of the diametral portions. Therefore, the natures of the portal seal and the wiping action can be adapted to particular product applications by varying the material of the sealing gland 50, the dimensional parameters and/or the interconnecting location of the diametral portions 76 and 78, or by disposing radial slits in the diametral portions 76 and 78.

When a peripheral seal having predetermined sealing parameters is desired, a sealing gland 84 may be configured as illustrated in FIG. 6. Because of the similarities which exist between the sealing gland 84 and sealing gland 50, similar parts are identified in FIG. 6 by the same reference numerals used in FIG. 5, but with a prime (′) added. Sealing gland 84 has a diaphragm 72′ and an annular lip 70′ disposed at opposite ends of a tubular frame 74′ which is conically tapered therebetween. The annular lip 70′ is disposed on a right cylindrical portion 86 and a raised rim 88 is peripherally disposed about the diaphragm end of sealing gland 84. As before, the taper of the tubular frame 74′ increases in diameter from the diaphragm end to the annular lip end. The annular lip 70′ has parallel sides 90 projecting radially inward from the tubular frame 74′ toward the longitudinal axis thereof and presents an arcuate face 92 which extends from one parallel side 90 to the other.

When utilized, the sealing gland 84 is disposed within a reservoir assembly having the identical reservoir body 58 and identical portal bushing 56 to that shown in FIG. 4. Therefore, the sealing gland 84 interlocks to the bushing 56 and seats within the reservoir body 58 in the same manner as discussed previously for the sealing gland 50. Again the conical taper and the elastic nature of the tubular frame 74′ are effective to centrally locate the sealing gland 84 within the reservoir body 58 so as to establish a symmetrically distributed interface thereagainst. A peripheral seal is created as a result of radially directed forces developed within the sealing gland 84 between the bushing 56 and the reservoir body 58 due to the tubular frame 74′ and the annular lip 70′ being compressed therebetween. Again the sealing forces are exerted over the symmetrically distributed

interface and are proportional to the magnitude of this compression. Due to the arcuate face **92** the proportionality factor is initially nonlinear, but becomes linear after the arcuate face **92** is fully compressed. Also, the sealing forces of the peripheral seal can be predetermined within relatively precise limits by merely varying the combined radial thickness of the tubular frame **74'** and the annular lip **70'**. Furthermore, the annular lip **70'** being disposed on the right cylindrical portion **86** of the tubular frame **74'**, the sealing forces are distributed over the outer surface of the right cylindrical portion **86.** Since the right cylindrical portion **86** can have any desired width, the area of the symmetrically distributed interface at the peripheral seal can also be predetermined within relatively precise limits.

A portal seal and wiping action are developed by the diametral portions **76'** and **78'** of diaphragm **72'** in the same manner as that discussed previously for the diaphragm **72** of sealing gland **50.** Therefore, the natures of the portal seal and the wiping action can again be adapted to particular product applications by varying the material of the sealing gland **84,** the dimensional parameters and/or the interconnecting location of the diametral portions **76'** and **78'** or by disposing radial slits in the diametral portions **76'** and **78'**. Of course, the length of tubular frame **74'** separating the annular lip **70'** from the diaphragm **72'** can be varied in accordance with the particular product application. Furthermore, the raised rim **88** on the tubular frame **74'** can be sized to provide for initial alignment within the reservoir body **58** on lengthy sealing glands or to provide a supplemental peripheral seal.

It should be readily appreciated by those skilled in this art that the diaphragm of this invention provides distinct diametral portions with which sealing and wiping actions of predetermined magnitude are achieved at particular diametral locations. Also, the cross-sectional configuration of the diametral portions is rectangular and the dimensional parameters thereof can be adapted to the applicator of any product application. Furthermore, the diaphragm of this invention can be incorporated into a sealing gland which interlocks with a portal bushing to establish a subassembly of high integrity. Otherwise, this sealing gland is configured to establish a peripheral seal of predeterminable parameters about the portal bushing.

It should be understood that the present disclosure has been made only by way of example and that numerous changes in the details of construction and the combination or arrangement of parts may be resorted to without departing from the true spirit and the scope of this invention. Therefore, the present disclosure should be construed as illustrative rather than limiting.

What I claim is:

1. A flexible diaphragm for use in a reservoir assembly to establish a portal seal around and a wiping action over an applicator which passes therethrough when the reservoir assembly is utilized as part of a product container, said diaphragm comprising:

an annular ring of substantially rectangular cross-sectional configuration, said annular ring having an inner diametral portion and an outer diametral portion, said inner diametral portion being relatively thinner than said outer diametral portion along the annular axis, each said diametral portion presenting particular flexure characteristics along the annular axis, said flexure characteristics of said inner diametral portion being predeterminable to effect the wiping action and said flexure characteristics of said outer diametral portion being predeterminable to effect the portal seal.

2. The diaphragm of claim **1** wherein said inner diametral portion is centrally disposed along the annular axis within the thickness of said outer diametral portion.

3. A sealing gland for use in a reservoir assembly to establish a peripheral seal therein around a portal bushing and a portal seal about an applicator which passes therethrough when the reservoir assembly is utilized as part of a product container, said sealing gland being fabricated of elastomeric material and comprising:

a tubular frame;

an annular lip disposed on the interior wall of said tubular frame and to one longitudinal end thereof, said annular lip being interlockable to the bushing and radially compressible within the reservoir assembly to develop sealing forces against said tubular frame in establishing the peripheral seal; and

a sealing and wiping diaphragm disposed across the other longitudinal end of said tubular frame, said diaphragm being an annular ring of substantially rectangular cross-sectional configuration, said annular ring having an inner diametral portion and an outer diametral portion, said inner diametral portion being relatively thinner than said outer diametral portion along the annular axis, each said diametral portion presenting particular flexure characteristics along the annular axis, said flexure characteristics of said inner diametral portion being predeterminable to effect a wiping action over the applicator and said flexure characteristics of said outer diametral portion being predeterminable to effect the portal seal.

4. The sealing gland of claim **3** wherein said inner diametral portion is centrally disposed along the annular axis within the thickness of said outer diametral portion.

5. The sealing gland of claim **3** wherein the exterior of said tubular frame is conically tapered, said tubular frame being of minimum diameter at the diaphragm end and of maximum diameter at the annular lip end, said taper being effective to centrally locate said sealing gland within the reservoir assembly and to establish a symmetrically distributed interface therein; and wherein said annular lip is configured to have a trapezoidal cross-section, the nonparallel sides of said annular lip being disposed to converge toward the longitudinal axis of said tubular frame.

6. The sealing gland of claim **5** wherein said inner diametral portion is centrally disposed along the annular axis within the thickness of said outer diametral portion.

7. The sealing gland of claim **3** wherein the exterior of said tubular frame is conically tapered, said tubular frame being of minimum diameter at the diaphragm end and of maximum diameter at the annular lip end, said taper being effective to centrally locate said sealing gland within the reservoir assembly and to establish a symmetrically distributed interface therein; and wherein said annular lip presents an arcuate face, said arcuate face extending across parallel sides, said parallel sides projecting inwardly from said tubular frame toward the longitudinal axis thereof.

8. The sealing gland of claim **7** wherein said inner diametral portion is centrally disposed along the annular axis within the thickness of said outer diametral portion.

9. The sealing gland of claim **3** wherein the exterior of said tubular frame is conically tapered between said annular lip and said diaphragm, said annular lip being disposed on a right cylindrical portion of said tubular frame, said right cylindrical portion being effective to establish predetermined sealing parameters for the peripheral seal; wherein said annular lip is configured to have a trapezoidal cross-section, the nonparallel sides of said annular lip being disposed to converge toward the longitudinal axis of said tubular frame; and wherein a raised rim is peripherally disposed about the diaphragm end on said tubular frame.

10. The sealing gland of claim **9** wherein said inner diametral portion is centrally disposed along the annular axis within the thickness of said outer diametral portion.

11. The sealing gland of claim **3** wherein the exterior of said tubular frame is conically tapered between said annular lip and said diaphragm, said annular lip being disposed on a right cylindrical portion of said tubular frame, said right cylindrical portion being effective to establish predetermined sealing parameters for the peripheral seal; wherein said annular lip presents an arcuate face, said arcuate face extending across parallel sides, said parallel sides projecting inwardly from said tubular frame toward the longitudinal axis thereof; and wherein a raised rim is peripherally disposed about the diaphragm end on said tubular frame.

12. The sealing gland of claim **11** wherein said inner diametral portion is centrally disposed along the annular axis within the thickness of said outer diametral portion.

* * * * *