United States Patent [19]

Simovits, Jr. et al.

[11] **3,812,450**

[45] **May 21, 1974**

[54] **RELAY SOCKET**

[75] Inventors: **Stephen S. Simovits, Jr.,** Woodridge; **Christ J. Dumas,** Forest View, both of Ill.

[73] Assignee: **American Plasticraft,** Chicago, Ill.

[22] Filed: **Apr. 3, 1972**

[21] Appl. No.: **240,666**

[52] **U.S. Cl.** ..... **339/128,** 174/153 G, 248/27

[51] **Int. Cl.** **H02b 1/02**

[58] **Field of Search** ..... 339/128, 126, 59, 62; 200/168 C; 174/153 G; 292/DIG. 38; 248/27; 24/73 SM, 73 SB, 73 PP

[56] **References Cited**

UNITED STATES PATENTS

3,012,159	12/1961	Drusedow	339/126 RS
2,946,612	7/1960	Ahlgren	292/DIG. 38
3,289,145	11/1966	Ruehlemann	174/153 G UX
3,057,001	10/1962	Rapata	339/128 X
3,573,716	4/1971	Garuer	339/128

Primary Examiner—Henry C. Sutherland
Assistant Examiner—William F. Pate, III

[57] **ABSTRACT**

A socket for a plug-in type of relay, which socket is formed of an insulative material and may be mounted from the front or from the rear side of a relay mounting panel.

4 Claims, 8 Drawing Figures

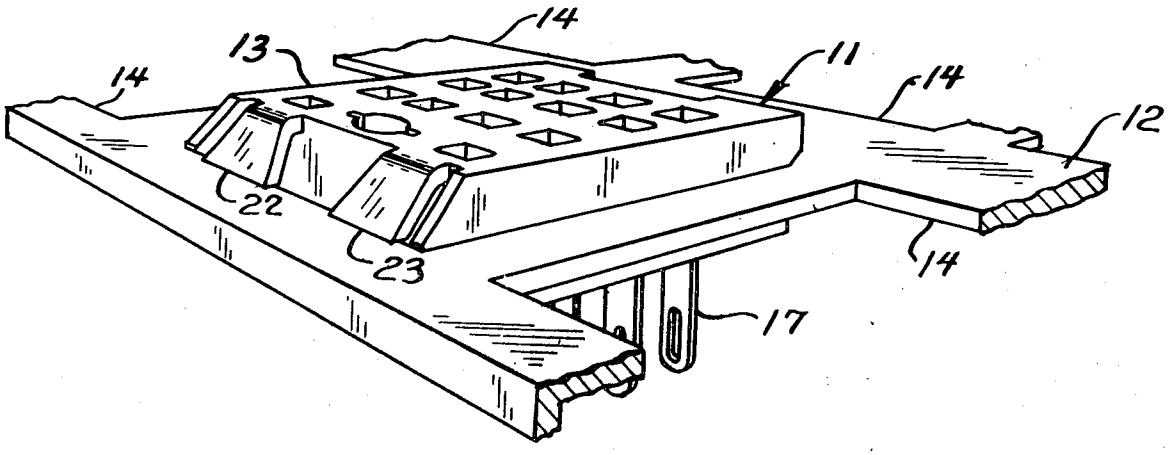

Fig. 1

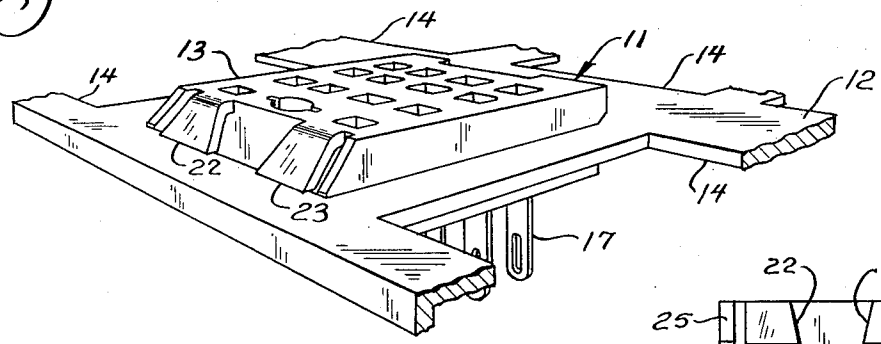

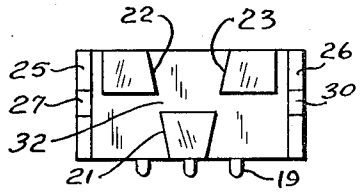

Fig. 4

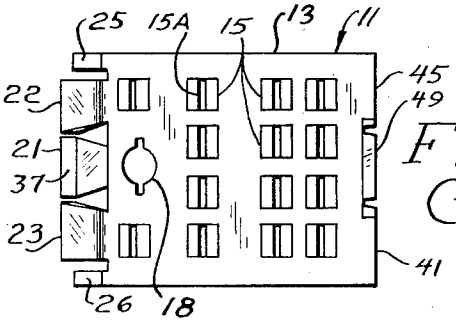

Fig. 2

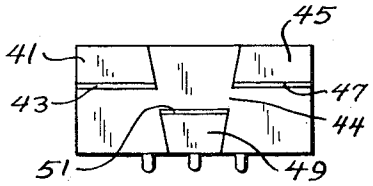

Fig. 5

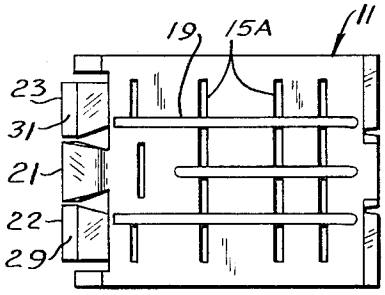

Fig. 3

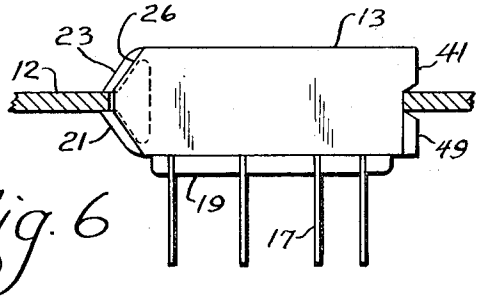

Fig. 6

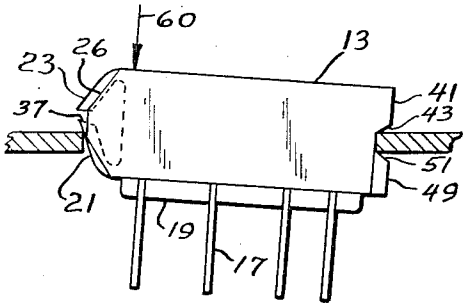

Fig. 7

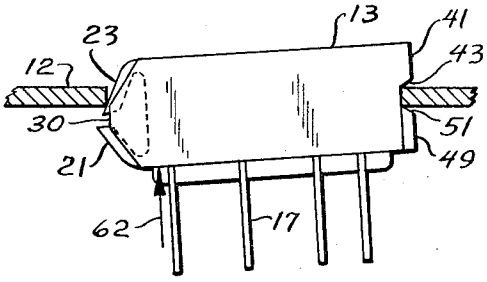

Fig. 8

RELAY SOCKET

BACKGROUND OF THE INVENTION

Relay sockets for mounting on electrical panels are known in the art. Such sockets are usually made of an insulating material and arranged to be mounted either by suitable screws, locking lugs or clamps onto the panels.

The prior art relay sockets are generally quite satisfactory; however, such prior art relay sockets have the limitation that the socket can only be mounted from one or the other side of the panel. Hence, for example, a technician working on one side of a large panel may want to mount a socket on the panel; however, the socket may be mountable only from the other side of the panel. Hence, the technician may have to move to the other side of the panel, mount the socket in position, and then return to the first side of the panel to complete his work.

Thus, it is often inconvenient for such prior art sockets to be mounted on their respective panels because of the aforementioned fact that the socket can be mounted onto the panel only from one side of the panel.

Accordingly, it is a peripheral object of the present invention to provide a snap socket for a relay which may be mounted on an associated panel from either side of the panel.

It is another object of the present invention to provide a socket having good dielectric spacing between the conductors.

The foregoing and other features and advantages of the invention will be apparent from the following more particular description of a preferred embodiment, as illustrated in the accompanying drawings wherein:

FIG. 1 is an isometric view of a relay socket in accordance with the invention showing the socket mounted in an associated panel;

FIG. 2 is a top view of the socket of FIG. 1 without the terminal pins to thus better show the construction of the socket;

FIG. 3 is a bottom view of the socket, as in FIG. 2;

FIG. 4 is a front view of the socket, as in FIG. 2;

FIG. 5 is a back view of the socket as in FIG. 2;

FIG. 6 is a side view partly in section showing a side view of the socket of FIG. 1 in its mounted position;

FIG. 7 is a side view partly in section showing the socket of FIG. 1 being mounted from the top side of the panel; and,

FIG. 8 is a side view partly in section showing the socket of FIG. 1 being mounted from the bottom side of the panel.

DESCRIPTION OF THE INVENTION

Referring to FIG. 1, the socket 11 of the invention is shown mounted in position in an opening 14 in an associated panel 12. As indicated in FIG. 1, other openings generally labeled as 14 are formed in the panel and are adapted to receive sockets identical to socket 11.

Referring now to FIGS. 2–5, as well as FIG. 1, socket 11 comprises an essentially rectangular body portion 13 formed of an insulative material, such as polypropylene.

Pin aperture or receptacles, generally labeled 15 and 15A, are formed to extend through the body portion

13, see FIG. 2, for receiving the associated terminal pins 17 which are inserted in the apertures 15 and 15A and locked in position as is known in the art.

As is known, the top portion of the pins 17 are bifurcated to receive the male contact pins or terminals of the associated relay, not shown. A suitable key way 18 is provided to assure that the associated relay is properly positioned in relay socket 11.

FIG. 3 shows a bottom view of socket 11 with the terminal pins removed, as in FIG. 2, to more clearly show the construction of the bottom side of the socket. The bottom surface of socket 11 includes strengthening and insulating ridges 19 extending transverse to apertures 15A. The rather wide apertures 15 on the top side of socket 11 reduce in size to narrower apertures 15A on the bottom side of socket 11.

A basic advantage of the relay socket 11 of the invention is the structure which enables the socket to be mounted and positioned from either side of an associated panel.

For this purpose, snap-in flexible lugs 21, 22 and 23 are formed on one, say the front side, of the socket 11. Lugs 22 and 23 are formed on the top surface edge of the socket body 13 and extend downwardly and outwardly at an acute angle. The lug 21 is formed at the bottom surface edge of the socket body 13 and extends upwardly and outwardly.

The lugs 22 and 23 straddle lug 21 and a horizontal spacing 32 is formed between the bottom edge of lug 21 and the top edge of lugs 22 and 23, see FIG. 4.

The edges 29, 31 and 37 of the lugs 21, 22 and 23 are cut essentially on a horizontal line (as oriented in FIG. 1), to accomodate and fit snugly, against the top and bottom horizontal surfaces of the panel 12.

The back side of the socket, as shown in FIG. 5, includes mounting or panel engaging shoulders 41, 45 and 49. The mounting shoulders 41 and 45 are formed adjacent the upper surface of socket body 13 and straddle the lower shoulder 49 formed adjacent the bottom surface of the socket, see also FIG. 6. A horizontal spacing 44 is formed between the bottom edge of the shoulders 41 and 45 and the top edge of shoulder 49.

The bottom edges 43 and 47 of shoulders 41 and 45 are beveled upwardly and outwardly; and, the upper edge 51 of shoulder 49 is beveled downwardly and outwardly to facilitate guiding the socket 11 into its associated opening 14 and properly forcing socket 11 into position.

The socket 11 includes a pair of forwardly extending angled flanges or guides 25 and 26 formed on either forward side of the socket 11 body portion, see FIGS. 2 and 4. Flanges 25 and 26 are each tapered toward a reduced front vertical edge 27 and 30 respectively. Edges 27 and 30 provide the abutting edges which force and abut against the edge of the opening 14 to secure the socket in position. Flanges 25 and 26 also protect the lugs 21, 22 and 23 from damage as will be explained hereinbelow.

As mentioned above, a basic feature of the invention is that socket 11 can be pushed into its mounted position as shown in FIG. 6, from either the top of the panel 12 as indicated by the arrow 60 in FIG. 7, or from the bottom of the panel as indicated by the arrow 62 in FIG. 8.

As shown in FIG. 7, to insert the socket 11 from the top of the panel 12, the horizontal spacing or recess 44

between the upper shoulders **41, 45** and lower shoulder **49** is inserted in opening **14** against the edge of panel **12,** and snugged against the edge of the panel opening. The beveled edges **43, 47** and **51** facilitate the correct positioning of the socket **11** in its opening **14.** Next, the socket **11** is pushed down as indicated by the arrow **60,** and the oposite edge, the left hand edge as oriented in FIG. **7,** of the panel **12,** engages the lug **21** and pushes or forces lug **21** inwardly.

Lug **21** is pushed inwardly until the edge of panel **12** engages the angled edges of flanges **25** and **26,** which thus limits the flexing of the lug **21.**

As the socket **11** continues to be pushed downwardly, the upper edge or surface of lug **21** moves past the bottom surface of panel **12,** and the flexed or spring tension of the lug **21** causes the lug **21** to move outwardly whereby the top surface of lug **21** engages the bottom surface of the panel **12.**

The horizontal spacing **32** formed between the upper edge of lug **21** and the lower edges of lugs **22** and **23** is dimensioned to be slightly less than the thickness of the panel **12.** Thus, when the socket **11** is in position, the lugs **22** and **23** flex outwardly, see FIG. **6,** and the flat surfaces **29** and **31** of lugs **22** and **23** engage the upper surface of panel **12,** and the flat surface **37** of lug **21** engages the lower surface of panel **12.**

Thus, since lugs **21, 22** and **23** are flexible or resilient, since the horizontal spacing **32** is made slightly less than the thickness of the panel **12,** a spring like tension will exist to hold the socket **11** securely in position.

FIG. **8** shows the insertion or mounting of the socket **11** into its associated opening from the bottom or reverse side of the panel **12.** In this case, the upper lugs **22** and **23** are initially flexed inwardly to the angle edges of the flanges **25** and **26.** As As the lower surface of lugs **22** and **23** moves past the upper surface of panel **12,** the lugs **22** and **23** will snap outwardly and lock the socket **11** into the position. As mentioned, lugs **21, 22** and **23** are flexible and resilient, and the horizontal spacing **32** between the lugs is smaller than the thickness of panel **12,** hence, the lugs will hold the socket **11** securely in position in panel **12.**

The relay socket of the invention provides good dielectric spacing between the terminal pins. The construction of socket **11** also permits the socket and the associated relay to be correctly centered in the associated panel opening. The socket dielectric material further reduces residual corrosion caused by low or leakage voltage.

While the invention has been particularly shown and described with reference to a preferred embodiment thereof, it will be understood by those skilled in the art that various changes in form and details may be made therein without departing from the spirit and scope of the invention.

We claim:

1. A panel mounted socket for a plug-in type of relay, said socket being adapted to be mounted in an opening associated panel for receiving the terminal pins of an associated relay, said socket comprising, in combination, a dielectric body portion having apertures for receiving the terminal pins of the associated relay, shoulder means on said body portion for engaging one edge of the associated panel opening first and second flexible lug means for engaging the opposite edge of said panel opening, said first lug means extending outwardly and at a downward angle from an upper surface of said body portion, said second lug means outwardly and at an upper angle from a lower surface of said body portion, and said first and second lug means defining a spacing therebetween, which is less than the thickness of said panel to thereby resiliently engage said panel a horizontal spacing formed between the ends of said lug means for accommodating and mounting the socket onto said panel, said lug means being flexed inwardly by the panel as said body portion is inserted into the associated opening, and a spacing between said flange means for accommodating and mounting the socket onto said panel whereby the socket can be inserted and mounted in position in its associated opening from either the front or back side of the panel, and the ends of the lug means resiliently engage opposite surfaces of said panel to thereby retain the socket in position.

2. A socket as in claim **1** further including flange means extending outwardly from the body portion of said socket and being tapered inwardly from opposing surfaces of said body portion toward a flat vertical front, said flange limiting the flexing of said lugs by said panel to prevent damage to said lugs.

3. A socket as in claim **1** wherein the lug means are straddled for engaging the opposite surfaces of said panel.

4. An apparatus as in claim **1** wherein said lug means comprise a part of said body portion and extend outwardly at an angle from the top and bottom thereof and are flexed inwardly as a lug is pushed into its associated apparatus and, snap outwardly when the edge of the lug means move past the adjacent surface of said panel.

* * * * *