United States Patent [19]

Takayama

[11] **3,809,843**

[45] **May 7, 1974**

[54] **MICROWAVE HEATING APPARATUS**

[75] Inventor: **Takeshi Takayama,** Kawasaki, Japan

[73] Assignee: **The General Corporation,** Kawasaki-shi, Japan

[22] Filed: **May 28, 1971**

[21] Appl. No.: **147,974**

[30] **Foreign Application Priority Data**

June 1, 1970 Japan 45-53825

[52] **U.S. Cl.** **219/10.55**

[51] **Int. Cl.** **H05b 9/06**

[58] **Field of Search** 219/10.55

[56] **References Cited**

UNITED STATES PATENTS

3,629,537	12/1971	Haagensen	219/10.55
3,584,177	6/1971	Bucksbaum	219/10.55
3,544,751	12/1970	Valles	219/10.55
3,525,841	8/1970	Haagensen et al.	219/10.55
3,678,238	7/1972	Yasuoka	219/10.55

Primary Examiner—J. V. Truhe
Assistant Examiner—Hugh D. Jaeger

[57] **ABSTRACT**

A microwave oven is disclosed having an electromagnetic energy seal constituted by the oven enclosure and its associated door, each of which comprises a complementary stepped structure defining a pair of planes. One of the stepped structure is formed with a cavity therein having a plurality of walls and a terminating wall and which has an opening opposite to the step portion of the other stepped structure. The terminating wall of the cavity is spaced substantially ¼ wavelength from the middle point intermediate the step portion and the opening and is spaced an integral multiple of ½ wavelength from the boundary of the oven interior.

9 Claims, 4 Drawing Figures

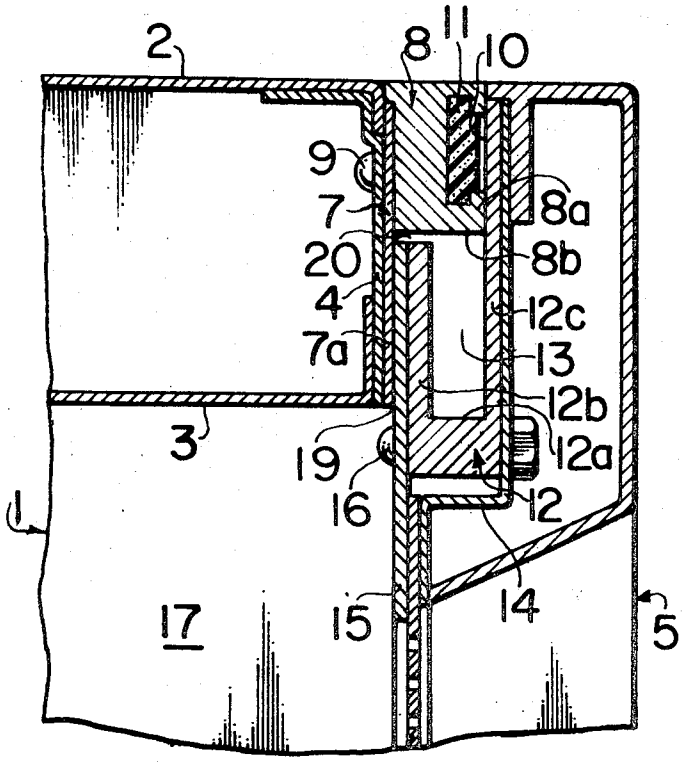

FIG. 1

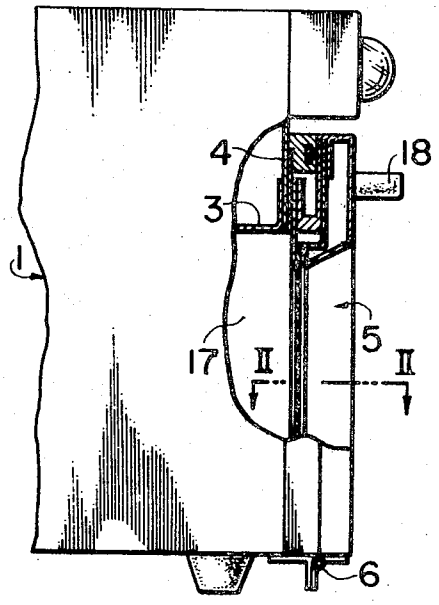

FIG. 2

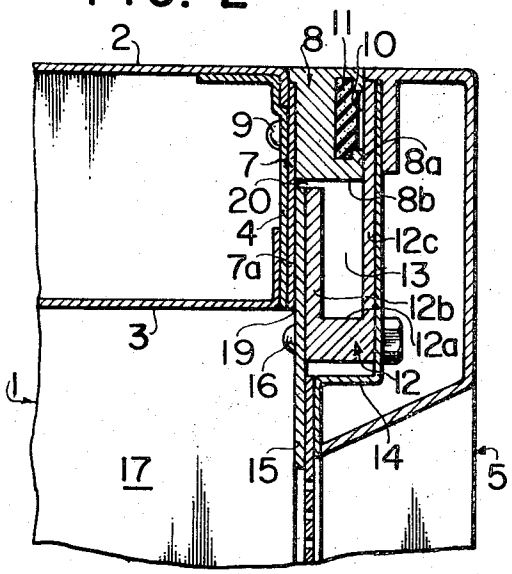

INVENTOR.
TAKESHI TAKAYAMA
BY
Linton & Linton
ATTORNEYS

FIG. 3

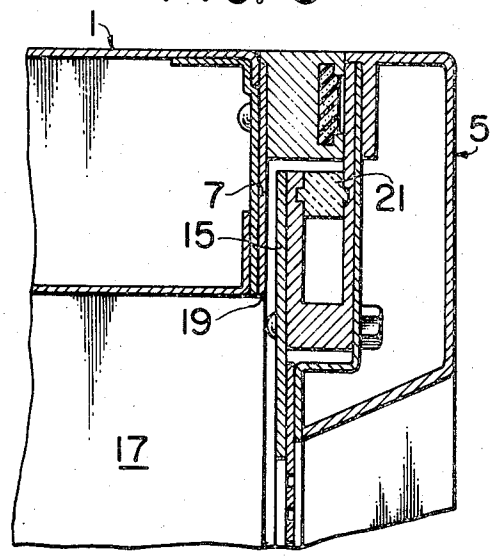

FIG. 4

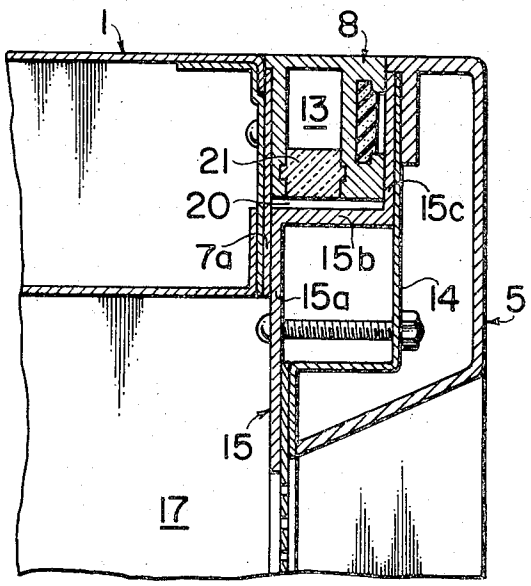

INVENTOR.
TAKESHI TAKAYAMA
BY
Seaton and Seaton
ATTORNEYS

MICROWAVE HEATING APPARATUS

The invention relates to a microwave oven, and more particularly to such an oven which is provided with a microwave energy seal operable to prevent leakage of electromagnetic energy to the exterior of the oven through a gap between an enclosure and a door associated therewith.

In order to avoid dangers resulting from leakage of an electromagnetic energy, a microwave oven is provided with a secure electromagnetic energy seal between the enclosure and its associated door. While it is unlikely that leakage of an electromagnetic energy occurs during the normal operation when the door is completely closed with this such a secure seal, the construction of such a seal is expensive. Usually a switching means is mechanically interlocked with the door to interrupt the supply of microwave energy to the oven chamber when the door is opened. A problem is encountered with this type of construction in that although the time required to interrupt the associated electrical circuit is almost a matter of moment, the electromagnetic energy supplied to the oven chamber in the interval is free to leak through the small spacing provided by the door that is being opened. To avoid such a disadvantage, modern microwave oven is provided with a mannual switching means that is separate from the first mention switching means associated with the door, a requirement being imposed upon a user of the oven that he operates the mannual switching means prior to opening the door. However, the construction is such that the user may not operate the mannual switch in order to open the door, and hence the user may forget to operate the manual switch by inadvertence. Preventing leakage of an electromagnetic energy through an opening door gap is of course of primary importance, but this involves an additional advantage that if the oven is provided with a seal such that no leakage of electromagnetic energy existing in the oven chamber occurs when the door is open even slightly, then the same prevention means will be effective to prevent leakage of electromagnetic energy in the event the oven operation is started with trush or other obstacle held between the enclosure and the door to leave a small gap therebetween.

U. S. Pat. No. 3,182,164 issued to Richard Ironfield on May 4, 1965 discloses an electromagnetic energy seal for use in a microwave oven which incorporates choke coupling or choke seal known in the waveguide technique. This patent teaches formation of an arc-preventing gap between a metal enclosure and a metal in a manner to create a short circuit condition at the entrance of the gap without use of any metal bar so that an electromagnetic energy may not leak through the gap. However, the gap as described in this patent is not one that is produced by opening the door, but refers to that one which is formed when the door is closed or in physical contact with the enclosure. As a result, the short circuit condition cannot be maintained in the gap at the inlet of the enclosure which is formed below a sliding door shown in FIG. 1 of that patent when the door begins to be opened.

Therefore, it is a general object of the invention to provide a microwave oven provided with an electromagnetic energy seal which is capable of completely eliminating above disadvantage associated with prior art microwave ovens.

It is a more specific object of the invention to provide a microwave oven having a door structure which prevents leakage of an electromagnetic wave, not only in the closed position of the door, but even when the door is off its position to thereby leave a small gap in the access opening of the enclosure.

It is another object of the invention to provide a multiple electromagnetic wave seal which is simple in construction and patterned for ready feasibility of locating several seals having different functions in sequence along the direction of escape of electromagnetic energy.

Above and other objects, features and advantages of the invention will become apparent from the following detailed description of selected embodiments thereof with reference to the drawings, in which:

FIG. 1 is a fragmentary side elevation, partly in section, of an embodiment of a microwave oven according to the invention;

FIG. 2 is an enlarged section taken along the line 2 — 2 shown in FIG. 1;

FIG. 3 is a section of another embodiment of the invention which involves no metal contact between the enclosure and the first plane of the door; and

FIG. 4 is a section of a further embodiment of the invention in which a cavity member is mounted on the side wall of oven shield.

Referring to FIG. 1, the microwave oven illustrated comprises a metal enclosure **1** which includes an outer wall **2**, an inner wall **3** and a front wall **4**, an interior being shown at **17** and having an entrance which is covered by a door **5**. The door **5** is hinged at **6** to the enclosure **1** and is adapted to be opened and closed in a pivotal movement by mannual operation of a handle **18** provided at the opposite or upper end of the door **5**. While not shown, the enclosure **1** contains means for supplying microwave energy to the interior **17**.

The interface between the enclosure **1** and the door comprises two planes which define a stepped construction. In accordance with the invention, a cavity is formed in one of the stepped spaces, for cooperation with the other step. As will be seen in FIG. **2**, in the most preferred form of the invention, the cavity is located within the door structure **5**, and such structure will be described more particularly below.

The front wall **4** of the oven is attached with an oven shield plate **7**, which in turn is attached with an oven shield frame **8** which leaves a certain width of shield plate portion **7***a*. In the front surface **8***a* of the oven shield frame **8** is formed a recess **10** in which is embedded a wave absorber **11**. As a result, around the access opening of the oven is formed a stepped structure which is defined by a first plane presented by the inner portion **7***a* of the oven shield plate **7**, and a second plane presented by the front surface **8***a* of the oven shield frame **8**. The sidewall **8***b* of the oven shield frame **8** which interconnects the first and second planes **7***a*, **8***a* is shown at right angles to the front surface **8***a*, but this need not be so restricted and a greater angle may be used to prevent deposition of dusts and other obstacles on that sidewall. The oven shield frame **8** is rigidly secured together with the oven shield plate **7** to the front wall **4** with screws **9**.

The door **5** is provided with a back-up plate **14** all around it, to which a door shield frame **12** and a door shield plate **15** are rigidly secured with screws **16**. The door shield frame **12** is a U - shaped plate member in-

cluding a base **12***a*, a short leg portion **12***b* and a long leg portion **12***c*, these together constituting a cavity **13** which opens toward the sidewall **8***b* of the oven shield frame **8.** The long leg portion abuts against the back-up plate **14** and the short leg portion **12***b* is in abutting relation with the door shield plate **15.** The door shield plate **15** comes opposite to the first plane **7***a* of the oven, and abuts thereagainst in the example shown. The door shield plate **15** has a width substantially greater than the inner portion **7***a* of the oven shield plate **7** and forms at its one end a gap **20** with the sidewall **8***b* of the oven shield frame when the door is closed. The short leg portion **12***b* of the door shield frame terminates substantially at the same position with said one end of the door shield plate **15.** Where the sidewall **8***b* is inclined as mentioned previously, the gap **20** may be substantially reduced to zero, the requirement on the gap **20** being to insure the capability of the door **5** to be opened and closed. The long leg portion of the door shield frame extends to the outer periphery of the door and lies opposite to and abuts against the front surface **8***a* defining the second plane. In this manner, a stepped structure comprising a first plane presented by the door shield plate **15** and a second plane presented by the long leg portion **12***c* of the door shield frame is formed around the door **5.**

The opposing stepped structures formed around the enclosure **1** and the door **5** have a significance to the cavity **13** and enables a multiple electromagnetic energy seal to be provided in a simple manner. As described previously, the cavity **13** is formed by short and long leg portions **12***b* and **12***c* and a terminating wall or base **12***a* and has an opening which is opposite to and cooperates with the sidewall **8***b* of the oven shield frame. An opening defining line can be considered as extending from the effective end of the short leg portion **12***b*. If the length of the gap **20** defined between the above end and the sidewall **8***b* of the oven shield frame is assumed to be approximately zero, then the opening defining line for the cavity **13** can be regarded as extending along the sidewall **8***b*, and can be considered as representing a surface of the step of the door structure. In accordance with the invention, when the door **5** is closed, the terminating surface of the cavity **13** or base **12***a* which forms a sidewall thereof is located at a distance from the boundary **19** of the oven interior **17** which is substantially an integral multiple of ½ wavelength and is also located at a distance of substantially ¼ wavelength from the center between the sidewall **8***b* and the opening defining line of the cavity **13,** or from the middle point between the steps of the enclosure **1** and the door **5.** As used herein, the term "wavelength" refers to that wavelength of an electromagnetic wave which is produced in the oven apparatus and propagates through the interspace between the oven walls and the door. For example, a practical microwave oven apparatus uses a radiation having a frequency of 2,450 MHZ, which will have a wavelength of approximately 5 inches in the atmosphere. However, according to the invention, a propagation medium can be used which reduces the effective wavelength of a radiation energy, and therefore the "wavelength" as termed herein does not refer to a radiation of any fixed frequency, or only to those radiations capable of propagation through the atmosphere.

In the closed position of the door, the respective first planes **7***a* and **15** of the enclosure **1** and the door **5** are in abutting relationship with each other as are the respective second planes **8***a* and **12***c* thereof, as shown in FIG. **2,** with result that the metal contact produced functions as an electromagnetic energy seal. Any escape of electromagnetic energy through the metal contact at the first planes **7***a* and **15** will be trapped by the metal contact provided at the second planes **8***a* and **12***c*. However, in accordance with the invention, a choke seal is provided independently from these metal contacts. Specifically, the base **12***a* of the cavity **13** presents a short circuit condition effectively to any electromagnetic energy propagating thereinto. This is reflected as an open circuit condition at the middle point between the opening defining line of the cavity **13** and the sidewall **8***b* of the oven shield frame which is spaced ¼ wavelength from the terminating wall **12***a*, and also reflected as a short circuit condition at a point spaced therefrom by a further ¼ wavelength. This means that a short circuit condition is eventually produced at the boundary **19** of the oven interior **17.** As a result, leakage of electromagnetic energy from the boundary **19** to the exterior of the oven is prevented even if the metal contact at the first and second planes is not complete, and is even more diminished by the presence of such metal contact. While this is least likely to occur, any amount of leakage of electromagnetic energy through the metal contact at the second pleanes **8***a* and **12***c* will be completely trapped by the wave absorber **11** disposed at a part of the second plane **8***a* of the oven. Desirably the wave absorber comprises rubber material blended with ferite, which serves to absorb any adjacently existing wave without directly blocking the wave path.

it is found that the maximum length of the gap that may be formed between the enclosure and the door when opening the door by the time the switching means interlocked with door motion interrupts the electrical circuit of the microwave supply means is usually 3 mm or less. It will be understood that any gap length which may be left due to the presence of obstacles without being noticed by a user will be of a magnitude of the same order. A greater gap will be either noticeable or effective to operate an associated detector. Thus, the above figure can be taken as the magnitude of gap that may induce danger, and it is satisfactory to prevent leakage of electromagnetic energy through a gap of this magnitude.

With the arrangement of the invention, when the door **5** is left open even slightly, the sealing action by the metal contact at the first and second planes will be lost, but the leakage of electromagnetic energy through the gap will be prevented so long as the gap length remains within the range of magnitude mentioned above. This is explained by the fact that a short circuit condition can be established at the boundary **19** of the oven interior **17** so long as the cavity **13** is located opposite the sidewall **8***b* of the oven shield frame for a pivotable stroke of the door **5.** While this short circuit condition may be unstable in nature as compared with the condition achieved when the door **5** is completely closed and hence may be somewhat shifted in position from the boundary **19,** the invention still provides an effective seal for electromagnetic energy. In addition, the wave absorber **11** serves to absorb portion of the electromagnetic wave emanating from the interior **17** of the oven. In particular, when the door **5** is left open slightly, it is noted that the absorber **11** is advantageously located

along the path of the electromagnetic wave. It is a flexibility provided by the invention that several different sorts of seals can be readily combined in sequential manner.

FIG. 3 shows a door construction in which the door shield plate **15** is opposite to, but does not abut against the oven shield plate **7**. Thus, in the closed position of the door **5**, the metal contact is not formed at the first planes as in FIG. **2**, but the illustrated structure is effective to prevent leakage by virtue of the short circuit condition established at the boundary **19**. In this embodiment, the opening of the cavity **13** is provided with a dressing member **21** in order to avoid ingress of dust or the like.

The cavity **13** which has been located within the door structure in the arrangements described thus far may be transferred to the enclosure **1**. FIG. **4** shows such a modification. In this embodiment, the door shield frame is omitted, and instead the door shield plate **15** has a front portion **15***a*, defining a first plane, and a rear portion **15***c*, defining a second plane and which is connected with the front portion **15***a* by a stepped sidewall **15***b*. The cavity **13** is formed in the oven shield frame **8** at a position opposite to the sidewall **15***b*. It will be appreciated that a gap is formed between the opening of the cavity **13** and the sidewall **15***b* and that the bottom or terminating wall of the cavity **13** is spaced by ¼ wavelength and by ½ wavelength, respectively, from the center of the space and from the boundary **19**, respectively. It is noted that the opening of the cavity **13** is provided with a dressing member **21** as mentioned in connection with FIG. **3**. This embodiment achieves the similar prevention of leakage of electromagnetic energy as other embodiments described before.

It should be understood that the description of above embodiments is illustrative only, but is not limiting the invention. Those skilled in the art would appreciate that various modifications and changes thereof are possible without departing from the scope and spirit of the invention. Therefore, it is intended that the invention is limited only by the appended claims.

What is claimed is:

1. A microwave oven comprising an enclosure defining an interior having an access opening, a door pivotally mounted on the enclosure and adapted to open and close the access opening, a stepped structure formed in the enclosure defined by a vertical plane through the access opening, another vertical plane parallel thereto and an interconnecting plane which connects said two vertical planes, a stepped structure provided in said door being of complementary form to stepped structure in said enclosure, and a cavity of substantially ¼ wavelength in depth, said cavity being opened to face to said interconnecting plane.

2. A microwave oven according to claim **1**, wherein said cavity is located within the stepped structure of said door.

3. A microwave oven according to claim **1**, wherein said interconnecting plane connects said vertical planes at right angles.

4. A microwave oven according to claim **1**, wherein a gap is formed between said stepped structures.

5. A microwave oven according to claim **1**, wherein said interconnecting plane is inclined with respect to said planes.

6. A microwave oven according to claim **1**, wherein said cavity is located within the stepped structure of said door and has an opening which is opposite to said interconnecting plane of the stepped structure of said enclosure, said enclosure and said door being capable of metal contact at each of said vertical planes, one of said stepped structure having a recess formed therein at one of the planes thereof, and a wave absorber positioned in said recess.

7. A microwave oven according to claim **6**, wherein said wave absorber is located at one of said vertical planes which is remote from said oven interior.

8. A microwave oven according to claim **1**, wherein said cavity is located within the stepped structure of said enclosure.

9. A microwave oven according to claim **1**, wherein said enclosure and said door are capable of metal contact at either of said vertical planes.

* * * * *